# Product data sheet

Specifications



## Selector switch, Harmony XB6, black rectangular, 16mm, 2 positions, stay put, 1NO + 1NC, key 200

XB6DGC5B

**Product availability: Stock - Normally stocked in distribution facility**

## Main

| | |
|---|---|
| **Range of Product** | Harmony XB6 |
| **Product or Component Type** | Complete selector switch |
| **Device short name** | XB6 |
| **Bezel material** | Plastic |
| **Mounting diameter** | 0.6 in (16 mm) |
| **Sale per indivisible quantity** | 1 |
| **Operating position** | Any position |
| **Shape of signaling unit head** | Rectangular |
| **Type of operator** | stay put |
| **Operator profile** | key switch |
| **Operator position information** | 2 positions 70° |
| **Type of Keylock** | Key 200 |
| **Key withdrawal position** | In any position |
| **Contacts type and composition** | 1 NO + 1 NC |
| **Contact operation** | Slow-break |

## Complementary

| | |
|---|---|
| **CAD overall width** | 0.9 in (24 mm) |
| **CAD overall height** | 0.7 in (18 mm) |
| **CAD overall depth** | 3.1 in (80 mm) |
| **Terminals description ISO n°1** | (13-14)NO<br>(21-22)NC |
| **Net Weight** | 0.079 lb(US) (0.036 kg) |
| **Positive opening** | With IEC 60947-5-1 appendix K |
| **Mechanical durability** | 200000 cycles |
| **Connections - terminals** | Faston connectors 2.8 x 0.5 mm |
| **Contacts material** | Silver alloy (Ag/Ni) |
| **Short-circuit protection** | 6 A cartridge fuse gG |
| **[Ui] rated insulation voltage** | 250 V 3)IEC 60947-1 |
| **[Uimp] rated impulse withstand voltage** | 4 kV IEC 60947-1 |

Price is “List Price” and may be subject to a trade discount – check with your local distributor or retailer for actual price.

Disclaimer: This documentation is not intended as a substitute for and is not to be used for determining suitability or reliability of these products for specific user applications

| | |
|---|---|
| **[Ie] rated operational current** | 3 A 120 V, AC-15, B300 IEC 60947-5-1<br>1.5 A 240 V, AC-15, B300 IEC 60947-5-1<br>0.1 A 250 V, DC-13, R300 IEC 60947-5-1<br>0.22 A 125 V, DC-13, R300 IEC 60947-5-1 |
| **Electrical durability** | 1000000 cycles, AC-15 230 V 3600 cyc/h 0.5 IEC 60947-5-1 appendix C<br>1000000 cycles, DC-13 230 V 3600 cyc/h 0.5 IEC 60947-5-1 appendix C |
| **Electrical reliability** | Λ = 10exp(-8) 5 V 1 mA with confidence level of 90 % IEC 60947-5-4 |

## Environment

| | |
|---|---|
| **Protective treatment** | TC |
| **Ambient Air Temperature for Storage** | -40…158 °F (-40…70 °C) |
| **Ambient Air Temperature for Operation** | -13…158 °F (-25…70 °C) |
| **Electrical shock protection class** | Class II conforming to IEC 61140 |
| **IP degree of protection** | IP65 IEC 60529 |
| **Standards** | IEC 60947-5-1<br>CSA C22.2 No 14<br>JIS C 852<br>UL 508<br>IEC 60947-1<br>IEC 60947-5-5<br>JIS C8201-5-1<br>JIS C8201-1 |
| **Product Certifications** | CCC<br>UL<br>CSA<br>GOST |
| **Shock resistance** | 30 gn 18 ms) half sine wave acceleration IEC 60068-2-27<br>50 gn 11 ms) half sine wave acceleration IEC 60068-2-27 |

## Ordering and shipping details

| | |
|---|---|
| **Category** | US10CS222459 |
| **Discount Schedule** | 0CS2 |
| **GTIN** | 3389110764666 |
| **Returnability** | Yes |
| **Country of origin** | FR |

## Packing Units

| | |
|---|---|
| **Unit Type of Package 1** | PCE |
| **Nbr. of units in pkg.** | 1 |
| **Package 1 Height** | 0.8 in (2 cm) |
| **Package 1 Width** | 3.9 in (10 cm) |
| **Package 1 Length** | 3.1 in (8 cm) |
| **Package weight(Lbs)** | 1.2 oz (34 g) |
| **Unit Type of Package 2** | S01 |
| **Number of Units in Package 2** | 60 |
| **Package 2 Height** | 5.9 in (15 cm) |
| **Package 2 Width** | 5.9 in (15 cm) |
| **Package 2 Length** | 15.7 in (40 cm) |
| **Package 2 Weight** | 4.881 lb(US) (2.214 kg) |

## Contractual warranty

| | |
|---|---|
| **Warranty (in months)** | 18 |

## Environmental Data

Schneider Electric aims to achieve Net Zero status by 2050 through supply chain partnerships, lower impact materials, and circularity via our ongoing “Use Better, Use Longer, Use Again” campaign to extend product lifetimes and recyclability.

Environmental Data explained >

How we assess product sustainability >

### Environmental footprint

| | |
|---|---|
| Total lifecycle Carbon footprint | **0.8 kg CO2 eq.** |
| Carbon footprint of the manufacturing phase [A1 to A3] | **0.8 kg CO2 eq.** |
| Carbon footprint of the distribution phase [A4] | **0 kg CO2 eq.** |
| Carbon footprint of the installation phase [A5] | **0 kg CO2 eq.** |
| Carbon footprint of the use phase [B2, B3, B4, B6] | **0 kg CO2 eq.** |
| Carbon footprint of the end-of-life phase [C1 to C4] | **0.1 kg CO2 eq.** |
| Environmental Disclosure | Product Environmental Profile |

## Use Better

### Materials and Substances

| | |
|---|---|
| Packaging made with recycled cardboard | **No** |
| Packaging without single use plastic | **No** |
| EU RoHS Directive | Compliant By Exemption |
| California proposition 65 | **WARNING: This product can expose you to chemicals including: Lead and lead compounds, which is known to the State of California to cause cancer and birth defects or other reproductive harm. For more information go to www.P65Warnings.ca.gov** |

## Use Again

### Repack and remanufacture

| | |
|---|---|
| Recyclability potential, in % | **17** |
| Circularity Profile | End of Life Information |
| Take-back | **No** |
| WEEE Label | **The product must be disposed on European Union markets following specific waste collection and never end up in rubbish bins.** |

Dimensions Drawings

## Rectangular Head Key Switch

### Dimensions

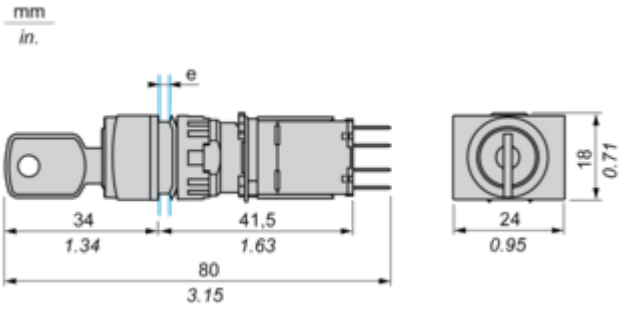


**e** panel thickness 1 to 6 mm/0.03 to 0.23 in.

Mounting and Clearance

## Panel Cut-out

### For Rectangular Head

