Product data sheet

Specifications



Monolithic pilot light, Harmony XB7, plastic, red, 22mm, integral LED, 110...120V AC

XB7EV04GP

Product availability: Stock - Normally stocked in distribution facility

Main

Range of Product	Harmony XB7
Product or Component Type	Pilot light
Device short name	XB7
Mounting diameter	0.9 in (22 mm)
Sale per indivisible quantity	10
Shape of signaling unit head	Round
Cap/operator or lens colour	Red
Light source	LED
Bulb base	Integral LED
[Us] Rated Supply Voltage	120 V AC 50/60 Hz
Device presentation	Monolithic product

Complementary

Height	1.1 in (29 mm)
Width	1.1 in (29 mm)
Depth	2.1 in (54 mm)
Terminals description ISO n°1	(X1-X2)PL
Net Weight	0.04 lb(US) (0.02 kg)
Device mounting	Fixing hole 0.9 in (22.5 mm) 22.3 +0.4/0 IEC 60947-5-1
Fixing center	>= 30 x 40 mm support panel) metal 0.04…0.2 in (1…6 mm) >= 30 x 40 mm support panel) plastic 0.08…0.2 in (2…6 mm)
Fixing mode	Fixing nut beneath head 17.7…21.2 lbf.in (2…2.4 N.m)
Connections - terminals	Screw clamp terminals, <= 2 x 1.5 mm² with cable end IEC 60947-1 Screw clamp terminals, 1 x 0.22...2 x 2.5 mm² without cable end IEC 60947-1
Tightening torque	7.08…10.6 lbf.in (0.8…1.2 N.m) IEC 60947-1
Shape of screw head	Cross JIS No 1 Cross Philips no 1 Cross pozidriv No 1 Slotted flat Ø 4 mm Slotted flat Ø 5.5 mm
[Ui] rated insulation voltage	250 V 3)IEC 60947-1
[Uimp] rated impulse withstand voltage	6 kV IEC 60947-1
Signalling type	Steady
Supply voltage limits	100…132 V AC

Price is “List Price” and may be subject to a trade discount – check with your local distributor or retailer for actual price.

Disclaimer: This documentation is not intended as a substitute for and is not to be used for determining suitability or reliability of these products for specific user applications

Current Consumption	18...21 mA
Service life	70000 h at rated voltage and 25 °C

Environment

Protective treatment	TH
Ambient Air Temperature for Storage	-40…158 °F (-40…70 °C)
Ambient Air Temperature for Operation	-13…158 °F (-25…70 °C)
Overvoltage category	Class II conforming to IEC 60536
IP degree of protection	IP20 IEC 60529 rear face) IP65 IEC 60529 front face)
Enclosure Type	UL type 4/12
Standards	IEC 60947-5-1 UL 508 IEC 60947-1 CSA C22.2 No 14 JIS C8201-5-1 JIS C8201-1
Vibration resistance	5 gn (f= 2…500 Hz) conforming to IEC 60068-2-6
Shock resistance	50 gn 11 ms) half sine wave acceleration IEC 60068-2-27
Electromagnetic compatibility	Disturbing field emission class B conforming to IEC 55011

Ordering and shipping details

Category	US10CS222464
Discount Schedule	0CS2
GTIN	3389119022798
Returnability	Yes
Country of origin	ID

Packing Units

Unit Type of Package 1	PCE
Nbr. of units in pkg.	1
Package 1 Height	1.102 in (2.800 cm)
Package 1 Width	1.102 in (2.800 cm)
Package 1 Length	2.165 in (5.500 cm)
Package weight(Lbs)	0.705 oz (20.000 g)
Unit Type of Package 2	BB1
Number of Units in Package 2	10
Package 2 Height	1.969 in (5.000 cm)
Package 2 Width	5.315 in (13.500 cm)
Package 2 Length	6.693 in (17.000 cm)
Package 2 Weight	7.055 oz (200.000 g)
Unit Type of Package 3	S01
Number of Units in Package 3	100
Package 3 Height	5.906 in (15.000 cm)

Package 3 Width	5.906 in (15.000 cm)
Package 3 Length	15.748 in (40.000 cm)
Package 3 Weight	5.137 lb(US) (2.330 kg)

Contractual warranty

Warranty (in months)	18

Environmental Data

Schneider Electric aims to achieve Net Zero status by 2050 through supply chain partnerships, lower impact materials, and circularity via our ongoing “Use Better, Use Longer, Use Again” campaign to extend product lifetimes and recyclability.

Environmental Data explained >

How we assess product sustainability >

Environmental footprint

Total lifecycle Carbon footprint	**3 kg CO2 eq.**
Carbon footprint of the manufacturing phase [A1 to A3]	**0.4 kg CO2 eq.**
Carbon footprint of the distribution phase [A4]	**0 kg CO2 eq.**
Carbon footprint of the installation phase [A5]	**0 kg CO2 eq.**
Carbon footprint of the use phase [B2, B3, B4, B6]	**3 kg CO2 eq.**
Carbon footprint of the end-of-life phase [C1 to C4]	**0 kg CO2 eq.**
Environmental Disclosure	Product Environmental Profile

Use Better

Materials and Substances

Packaging made with recycled cardboard	**No**
Packaging without single use plastic	**No**
EU RoHS Directive	Compliant
REACh Regulation	Free of Substances of Very High Concern above the threshold
California proposition 65	**WARNING: This product can expose you to chemicals including: Lead and lead compounds, which is known to the State of California to cause cancer and birth defects or other reproductive harm. For more information go to www.P65Warnings.ca.gov**

Use Longer

Lifetime extension

Repair	**No**

Use Again

Repack and remanufacture

Recyclability potential, in %	**15**
Circularity Profile	End of Life Information
Take-back	**No**
WEEE Label	**The product must be disposed on European Union markets following specific waste collection and never end up in rubbish bins.**

Dimensions Drawings

Pilot Light with Screw Terminal

Dimensions

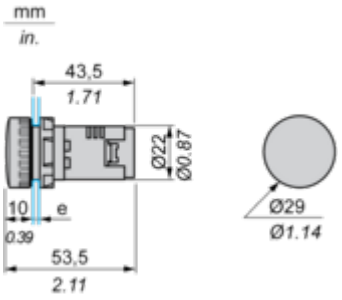

e Support panel thickness: 1 to 6 mm/0.4 to 0.24 in. (metal), 2 to 6 mm/0.8 to 0.24 in. (plastic).

Mounting and Clearance

Panel cut-out

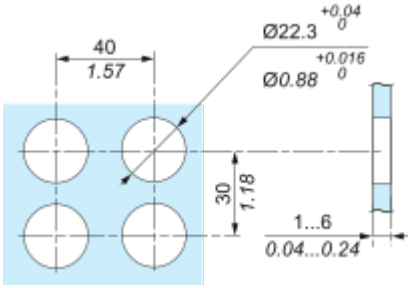

Faston Clip Connection

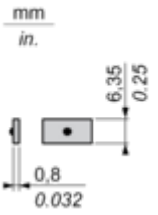

“U” Type Tag Connection

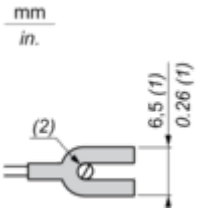

(1) 6.5 mm/0.26 in. recommended, 7 mm/0.28 in. max.
(2) M3 screw clamp terminal.

Connections and Schema

Wiring Diagram

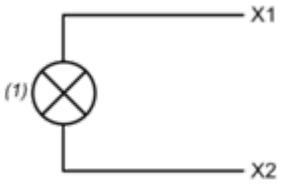

(1) LED

Image of product / Alternate images

Alternative






XB7-EV0•GP

