Product data sheet

Specifications



Monolithic selector switch, Harmony XB7, plastic, black, 22mm, stay put, 3 positions, stay put, 2NO

XB7ND33

Product availability: Stock - Normally stocked in distribution facility

Main

Range of Product	Harmony XB7
Product or Component Type	Selector switch
Device short name	XB7
Mounting diameter	0.9 in (22 mm)
Sale per indivisible quantity	10
Net Weight	0.057 lb(US) (0.026 kg)
IP degree of protection	IP20 IEC 60529 rear face) IP65 IEC 60529 front face)
Shape of signaling unit head	Round
Type of operator	stay put
Operator profile	Black standard handle
Operator position information	3 positions +/- 45°
Contacts type and composition	2 NO
Positive opening	Without

Complementary

CAD overall width	1.1 in (29 mm)
CAD overall height	1.1 in (29 mm)
CAD overall depth	2.7 in (68.5 mm)
Terminals description ISO n°1	(23-24)NO (13-14)NO
Device mounting	Fixing hole 0.9 in (22.5 mm) 22.3 +0.4/0 IEC 60947-1
Fixing center	>= 30 x 40 mm support panel) metal 0.04…0.2 in (1…6 mm) >= 30 x 40 mm support panel) plastic 0.08…0.2 in (2…6 mm)
Fixing mode	Fixing nut 17.7…21.2 lbf.in (2…2.4 N.m)
Contact operation	Slow-break
Mechanical durability	300000 cycles
Connections - terminals	Screw clamp terminals, <= 2 x 1.5 mm² with cable end IEC 60947-1 Screw clamp terminals, 1 x 0.34...2 x 2.5 mm² without cable end IEC 60947-1
Tightening torque	7.08…10.6 lbf.in (0.8…1.2 N.m) IEC 60947-1
Shape of screw head	Cross JIS No 1 Cross Philips no 1 Cross pozidriv No 1 Slotted flat Ø 4 mm Slotted flat Ø 5.5 mm

Price is “List Price” and may be subject to a trade discount – check with your local distributor or retailer for actual price.

Disclaimer: This documentation is not intended as a substitute for and is not to be used for determining suitability or reliability of these products for specific user applications

Short-circuit protection	4 A cartridge fuse gG IEC 60947-5-1
[Ui] rated insulation voltage	250 V 3)IEC 60947-1
[Uimp] rated impulse withstand voltage	4 kV IEC 60947-1
[Ie] rated operational current	0.1 A 250 V, DC-13, R300 IEC 60947-5-1 0.22 A 125 V, DC-13, R300 IEC 60947-5-1 0.3 A 240 V, AC-14, D300 IEC 60947-5-1 0.6 A 120 V, AC-14, D300 IEC 60947-5-1
Electrical durability	1000000 cycles, DC-13, 0.3 A 24 V 216000 cyc/mn 0.5 IEC 60947-5-1 appendix C 1000000 cycles, AC-15, 0.03 A 230 V 216000 cyc/mn 0.5 IEC 60947-5-1 appendix C 1000000 cycles, AC-15, 0.09 A 240 V 108000 cyc/mn 0.5 IEC 60947-5-1 appendix C
Electrical reliability	Λ < 10exp(-6) 17 V 5 mA IEC 60947-5-4

Environment

Protective treatment	TH
Ambient Air Temperature for Storage	-40…158 °F (-40…70 °C)
Ambient Air Temperature for Operation	-13…158 °F (-25…70 °C)
Electrical shock protection class	Class II conforming to IEC 61140
Enclosure Type	UL type 3/12
Standards	IEC 60947-1 UL 508 IEC 60947-5-1 CSA C22.2 No 14 JIS C8201-5-1 JIS C8201-1
Vibration resistance	5 gn (f= 2…500 Hz) conforming to IEC 60068-2-6
Shock resistance	50 gn 11 ms) half sine wave acceleration IEC 60068-2-27 30 gn 18 ms) half sine wave acceleration IEC 60068-2-27

Ordering and shipping details

Category	US10CS222464
Discount Schedule	0CS2
GTIN	3606480470264
Returnability	Yes
Country of origin	ID

Packing Units

Unit Type of Package 1	PCE
Nbr. of units in pkg.	1
Package 1 Height	2.8 in (7 cm)
Package 1 Width	1.3 in (3.2 cm)
Package 1 Length	1.3 in (3.2 cm)
Package weight(Lbs)	11.08 oz (314 g)
Unit Type of Package 2	S02
Number of Units in Package 2	100
Package 2 Height	5.9 in (15 cm)
Package 2 Width	11.8 in (30 cm)

Package 2 Length	15.7 in (40 cm)
Package 2 Weight	6.010 lb(US) (2.726 kg)
Unit Type of Package 3	P06
Number of Units in Package 3	1600
Package 3 Height	27.559 in (70.000 cm)
Package 3 Width	23.622 in (60.000 cm)
Package 3 Length	31.496 in (80.000 cm)
Package 3 Weight	63.5 lb(US) (28.8 kg)

Contractual warranty

Warranty (in months)	18

Environmental Data

Schneider Electric aims to achieve Net Zero status by 2050 through supply chain partnerships, lower impact materials, and circularity via our ongoing “Use Better, Use Longer, Use Again” campaign to extend product lifetimes and recyclability.

Environmental Data explained >

How we assess product sustainability >

Environmental footprint

Total lifecycle Carbon footprint	**0.4 kg CO2 eq.**
Carbon footprint of the manufacturing phase [A1 to A3]	**0.3 kg CO2 eq.**
Carbon footprint of the distribution phase [A4]	**0 kg CO2 eq.**
Carbon footprint of the installation phase [A5]	**0 kg CO2 eq.**
Carbon footprint of the use phase [B2, B3, B4, B6]	**0.1 kg CO2 eq.**
Carbon footprint of the end-of-life phase [C1 to C4]	**0.1 kg CO2 eq.**
Environmental Disclosure	Product Environmental Profile

Use Better

Materials and Substances

Packaging made with recycled cardboard	**Yes**
Packaging without single use plastic	**No**
EU RoHS Directive	Compliant
REACh Regulation	Free of Substances of Very High Concern above the threshold
California proposition 65	**WARNING: This product can expose you to chemicals including: Di-isodecyl phthalate (DIDP), which is known to the State of California to cause birth defects or other reproductive harm. For more information go to www.P65Warnings.ca.gov**

Use Again

Repack and remanufacture

Recyclability potential, in %	**27**
Circularity Profile	End of Life Information
Take-back	**No**
WEEE Label	**The product must be disposed on European Union markets following specific waste collection and never end up in rubbish bins.**

Dimensions Drawings

Selector Switch, Standard Handle

Dimensions

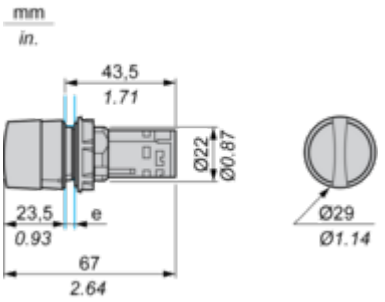

e Support panel thickness: 1 to 6 mm/0.4 to 0.24 in. (metal), 2 to 6 mm/0.8 to 0.24 in. (plastic).

Mounting and Clearance

Panel cut-out

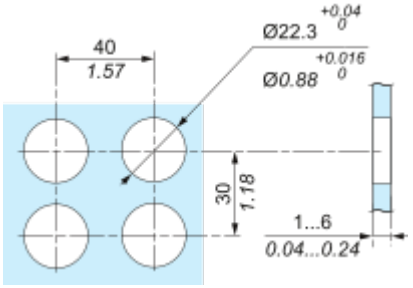

“U” Type Tag Connection

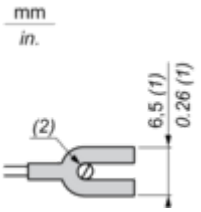

(1) 6.5 mm/0.26 in. recommended, 7 mm/0.28 in. max.
(2) M3 screw clamp terminal.

Connections and Schema

Wiring



Image of product / Alternate images

Alternative









Image of product in real life situation

