Product data sheet

Specifications



Monolithic illuminated push button, Harmony XB7, plastic, green, 22mm, integral LED, spring return, 24V AC DC, 1NO

XB7NW33B1

Product availability: Stock - Normally stocked in distribution facility

Main

Range of Product	Harmony XB7
Product or Component Type	Illuminated push-button
Device short name	XB7
Mounting diameter	0.9 in (22 mm)
Sale per indivisible quantity	10
IP degree of protection	IP20 IEC 60529 rear face) IP65 IEC 60529 front face)
Shape of signaling unit head	Round
Type of operator	spring return
Operator profile	Green projecting, unmarked
Contacts type and composition	1 NO
Connections - terminals	Screw clamp terminals, <= 2 x 1.5 mm² with cable end IEC 60947-1 Screw clamp terminals, 1 x 0.34...2 x 2.5 mm² without cable end IEC 60947-1
Light source	LED
Bulb base	Integral LED
[Us] rated supply voltage	24 V AC/DC
Device presentation	Monolithic product

Complementary

CAD overall width	1.1 in (29 mm)
CAD overall height	1.1 in (29 mm)
CAD overall depth	2.3 in (57.5 mm)
Terminals description ISO n°1	(13-14)NO
Net Weight	0.051 lb(US) (0.023 kg)
Device mounting	Fixing hole 0.9 in (22.5 mm) 22.3 +0.4/0 IEC 60947-1
Fixing center	>= 30 x 40 mm support panel) metal 0.04…0.2 in (1…6 mm) >= 30 x 40 mm support panel) plastic 0.08…0.2 in (2…6 mm)
Fixing mode	Fixing nut beneath head 17.7…21.2 lbf.in (2…2.4 N.m)
Contact operation	Slow-break
Positive opening	With (only NO)
Mechanical durability	300000 cycles
Tightening torque	7.08…10.6 lbf.in (0.8…1.2 N.m) IEC 60947-1

Price is “List Price” and may be subject to a trade discount – check with your local distributor or retailer for actual price.

Disclaimer: This documentation is not intended as a substitute for and is not to be used for determining suitability or reliability of these products for specific user applications

Shape of screw head	Cross JIS No 1 Cross Philips no 1 Cross pozidriv No 1 Slotted flat Ø 4 mm Slotted flat Ø 5.5 mm
Short-circuit protection	4 A cartridge fuse gG IEC 60947-5-1
[Ui] rated insulation voltage	250 V 3)IEC 60947-1
[Uimp] rated impulse withstand voltage	4 kV IEC 60947-1
[Ie] rated operational current	0.1 A 250 V, DC-13, R300 IEC 60947-5-1 0.22 A 125 V, DC-13, R300 IEC 60947-5-1 0.3 A 240 V, AC-14, D300 IEC 60947-5-1 0.6 A 120 V, AC-14, D300 IEC 60947-5-1
Electrical durability	1000000 cycles, DC-13, 0.3 A 24 V 216000 cyc/mn 0.5 IEC 60947-5-1 appendix C 1000000 cycles, AC-15, 0.03 A 230 V 216000 cyc/mn 0.5 IEC 60947-5-1 appendix C 1000000 cycles, AC-15, 0.09 A 240 V 108000 cyc/mn 0.5 IEC 60947-5-1 appendix C
Electrical reliability	Λ <= 10exp(-6) 17 V 5 mA IEC 60947-5-4
Signalling type	Steady
Supply voltage limits	19.2…30 V DC 21.6…26.4 V AC
Current Consumption	18...27 mA
Service life	70000 h at rated voltage and 25 °C

Environment

Protective treatment	TH
Ambient Air Temperature for Storage	-40…158 °F (-40…70 °C)
Ambient Air Temperature for Operation	-13…158 °F (-25…70 °C)
Electrical shock protection class	Class II conforming to IEC 61140
Enclosure Type	UL type 12
Standards	JIS C8201-5-1 IEC 60947-5-1 IEC 60947-1 UL 508 CSA C22.2 No 14 JIS C8201-1
Product Certifications	CCC GOST
Vibration resistance	5 gn (f= 2…500 Hz) conforming to IEC 60068-2-6
Shock resistance	50 gn 11 ms) half sine wave acceleration IEC 60068-2-27 30 gn 18 ms) half sine wave acceleration
Electromagnetic emission	Class B IEC 55011

Ordering and shipping details

Category	US10CS222464
Discount Schedule	0CS2
GTIN	3606480470745
Returnability	Yes
Country of origin	ID

Packing Units

Unit Type of Package 1	PCE
Nbr. of units in pkg.	1
Package 1 Height	1.378 in (3.500 cm)
Package 1 Width	3.543 in (9.000 cm)
Package 1 Length	3.937 in (10.000 cm)
Package weight(Lbs)	0.882 oz (25.000 g)
Unit Type of Package 2	BB1
Number of Units in Package 2	10
Package 2 Height	2.362 in (6.000 cm)
Package 2 Width	6.299 in (16.000 cm)
Package 2 Length	8.661 in (22.000 cm)
Package 2 Weight	8.642 oz (245.000 g)
Unit Type of Package 3	S01
Number of Units in Package 3	100
Package 3 Height	5.906 in (15.000 cm)
Package 3 Width	5.906 in (15.000 cm)
Package 3 Length	15.748 in (40.000 cm)
Package 3 Weight	5.964 lb(US) (2.705 kg)

Contractual warranty

Warranty (in months)	18

Environmental Data

Schneider Electric aims to achieve Net Zero status by 2050 through supply chain partnerships, lower impact materials, and circularity via our ongoing “Use Better, Use Longer, Use Again” campaign to extend product lifetimes and recyclability.

Environmental Data explained >

How we assess product sustainability >

Environmental footprint

Total lifecycle Carbon footprint	**24 kg CO2 eq.**
Carbon footprint of the manufacturing phase [A1 to A3]	**0.5 kg CO2 eq.**
Carbon footprint of the distribution phase [A4]	**0 kg CO2 eq.**
Carbon footprint of the installation phase [A5]	**0 kg CO2 eq.**
Carbon footprint of the use phase [B2, B3, B4, B6]	**24 kg CO2 eq.**
Carbon footprint of the end-of-life phase [C1 to C4]	**0 kg CO2 eq.**
Environmental Disclosure	Product Environmental Profile

Use Better

Materials and Substances

Packaging made with recycled cardboard	**Yes**
Packaging without single use plastic	**No**
SCIP Number	**Eb133e87-3df9-4bcd-b666-23e86eb33958**
EU RoHS Directive	Compliant By Exemption
REACh Regulation	Reference contains Substances of Very High Concern above the threshold
California proposition 65	**WARNING: This product can expose you to chemicals including: Lead and lead compounds, which is known to the State of California to cause cancer and birth defects or other reproductive harm. For more information go to www.P65Warnings.ca.gov**

Use Again

Repack and remanufacture

Circularity Profile	End of Life Information
Take-back	**No**
WEEE Label	**The product must be disposed on European Union markets following specific waste collection and never end up in rubbish bins.**

Dimensions Drawings

Illuminated Pushbutton

Dimensions

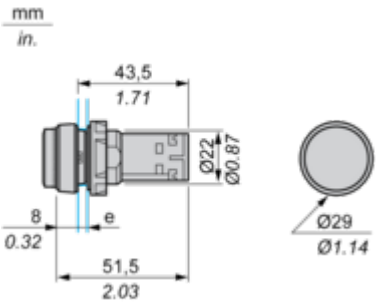

e Support panel thickness: 1 to 6 mm/0.4 to 0.24 in. (metal), 2 to 6 mm/0.8 to 0.24 in. (plastic).

Mounting and Clearance

Panel cut-out

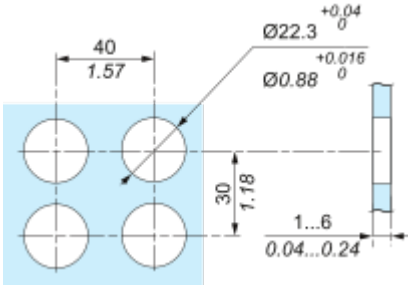

“U” Type Tag Connection

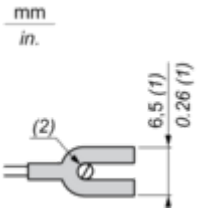

(1) 6.5 mm/0.26 in. recommended, 7 mm/0.28 in. max.
(2) M3 screw clamp terminal.

Connections and Schema

Wiring

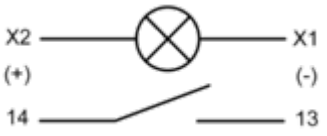

Image of product / Alternate images

Alternative







