Product data sheet

Specifications



Safety controller, Modicon MCM, 8 inputs 2 outputs, monitors expansion modules, screw

XPSMCMCP0802

Product availability: Stock - Normally stocked in distribution facility

Main

Range of Product	Modicon Safety automation
Device short name	XPSMCM
Electrical Connection	Screw terminal
Product or Component Type	Safety controller CPU
[Us] rated supply voltage	24 V - 20...20 % DC
Number of inputs	8 digital input connection 2 digital interlock start/restart or external device monitoring
Number of outputs	2 safety outputs OSSD contactor/drive connection 4 test line control outputs 2 configurable diagnostic connection
Discrete input voltage	24 V
Discrete output current	400 mA
Discrete input current	400 mA
Discrete input type	Safety input PNP
Discrete output type	PNP
Function of module	Emergency stop ISO 13850 Guard monitoring EN/ISO 14119 Enabling switch monitoring IEC 60947-5-1 Light curtain monitoring IEC 61496-1 Foot switch monitoring IEC 60947-5-1 Magnetic switch monitoring EN/ISO 14119 Two-hand control EN 574 Safety mat monitoring EN/ISO 14119 Enabling switch monitoring IEC 61326-1 Muting function of light curtains IEC 60947-5-1 Counter functions IEC 61800-5-2 Speed monitoring IEC 61800-5-2
Backplane connector	Without

Complementary

Synchronisation time between inputs	< 0.5 ms
Power dissipation in W	3 W
Maximum number of I/O expansion module	14 128 input 14 16 output
Integrated connection type	Backplane expansion bus USB 2.0 port
Data storage equipment	SD card optional)
Inductive load	30 mH
Load capacitance	0.82 µF

Price is “List Price” and may be subject to a trade discount – check with your local distributor or retailer for actual price.

Disclaimer: This documentation is not intended as a substitute for and is not to be used for determining suitability or reliability of these products for specific user applications

Safety level	Can reach category 4 ISO 13849-1 Can reach PL = e ISO 13849-1 Type 4 IEC 61496-1 SILCL 3 IEC 62061
Quality labels	CE
Local signalling	1 LED green PWR power ON 1 LED green RUN RUN (status) 1 LED red E IN internal error 1 LED red E EX external error 1 LED orange COM communication 1 LED blue EN master enable 8 LEDs yellow IN input status 2 LEDs green/red OUT output status 2 LEDs yellow RST restart signal 2 LEDs yellow STATUS output channel
Connections - terminals	6 captive screw terminals, removable terminal block
Cable cross section	0.0003…0.002 in² (0.2…1.5 mm²) - 24 AWG...16 AWG flexible without cable end 0.0003…0.004 in² (0.2…2.5 mm²) - 24 AWG...14 AWG flexible without cable end 0.0004…0.002 in² (0.25…1 mm²) - 23 AWG...18 AWG flexible with cable end, without bezel 0.0004…0.004 in² (0.25…2.5 mm²) - 23 AWG...14 AWG flexible with cable end, with bezel 0.0004…0.002 in² (0.25…1.5 mm²) - 23 AWG...16 AWG flexible with cable end, without bezel 0.0008…0.002 in² (0.5…1.5 mm²) - 20 AWG...16 AWG flexible with cable end, with double bezel 0.0003…0.002 in² (0.2…1 mm²) - 24 AWG...18 AWG solid without cable end 0.0003…0.004 in² (0.2…2.5 mm²) - 24 AWG...14 AWG solid without cable end
Mounting support	Omega 35 mm DIN rail EN 50022
Depth	4.5 in (114.5 mm)
Height	3.9 in (99 mm)
Width	0.9 in (22.5 mm)
Net Weight	0.55 lb(US) (0.25 kg)

Environment

Standards	IEC 61508 ISO 13849-1 IEC 61496-1 IEC 61800-5-1 IEC 62061
Product Certifications	cULus RCM TÜV
IP degree of protection	IP20
Ambient Air Temperature for Operation	14…131 °F (-10…55 °C)
Ambient Air Temperature for Storage	-4…185 °F (-20…85 °C)
Relative humidity	10…95 %
Pollution degree	2
[Uimp] rated impulse withstand voltage	4 kV IEC 61800-5-1
Safety reliability data	PFHd = 6.06E-9 1/h DC > 99 % MTTFd < 100 years high
Insulation	250 V AC between power supply and housing IEC 61800-5-1
Overvoltage category	II

Electromagnetic compatibility	Electrostatic discharge immunity test - test level: 6 kV (on contact) conforming to IEC 61000-4-2 Electrostatic discharge immunity test - test level: 20 kV (on air) conforming to IEC 61000-4-2 Susceptibility to electromagnetic fields - test level: 10 V/m (80...1000 MHz) conforming to IEC 61000-4-3 Susceptibility to electromagnetic fields - test level: 30 V/m (1.4 GHz...2 GHz) conforming to IEC 61000-4-3
Vibration resistance	+/-0.35 mm (f= 10…55 Hz) conforming to IEC 61496-1
Shock resistance	10 gn 16 ms) 1000 shocks on each axis IEC 61496-1
Service Life	20 year(s)

Ordering and shipping details

Category	US1SAF222477
Discount Schedule	SAF2
GTIN	3606480748561
Returnability	Yes
Country of origin	IT

Packing Units

Unit Type of Package 1	PCE
Nbr. of units in pkg.	1
Package 1 Height	6.500 in (16.510 cm)
Package 1 Width	5.300 in (13.462 cm)
Package 1 Length	2.000 in (5.080 cm)
Package weight(Lbs)	8.800 oz (249.476 g)

Contractual warranty

Warranty (in months)	18

Environmental Data

Schneider Electric aims to achieve Net Zero status by 2050 through supply chain partnerships, lower impact materials, and circularity via our ongoing “Use Better, Use Longer, Use Again” campaign to extend product lifetimes and recyclability.

Environmental Data explained >

How we assess product sustainability >

Environmental footprint

Total lifecycle Carbon footprint	**161 kg CO2 eq.**
Carbon footprint of the manufacturing phase [A1 to A3]	**17 kg CO2 eq.**
Carbon footprint of the distribution phase [A4]	**0 kg CO2 eq.**
Carbon footprint of the installation phase [A5]	**0.2 kg CO2 eq.**
Carbon footprint of the use phase [B2, B3, B4, B6]	**144 kg CO2 eq.**
Carbon footprint of the end-of-life phase [C1 to C4]	**0.3 kg CO2 eq.**

Use Better

Materials and Substances

Packaging made with recycled cardboard	**No**
Packaging without single use plastic	**Yes**
EU RoHS Directive	**Compliant**
REACh Regulation	**Free of Substances of Very High Concern above the threshold**
California proposition 65	**WARNING: This product can expose you to chemicals including: Lead and lead compounds, which is known to the State of California to cause cancer and birth defects or other reproductive harm. For more information go to www.P65Warnings.ca.gov**
PVC free	**Yes**

Use Again

Repack and remanufacture

Take-back	**No**
WEEE Label	**The product must be disposed on European Union markets following specific waste collection and never end up in rubbish bins.**

Dimensions Drawings

Dimensions

Screw Terminal

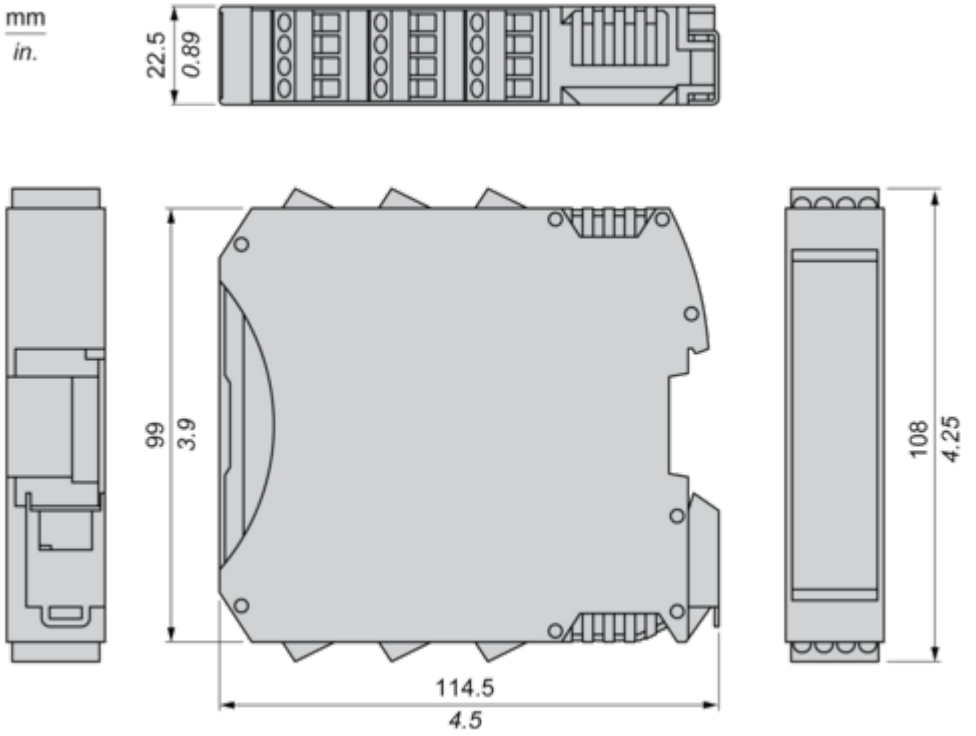

Mounting and Clearance

Mounting Safety Controller CPU with Module(s)

Mount BackPlane Connector on Rail

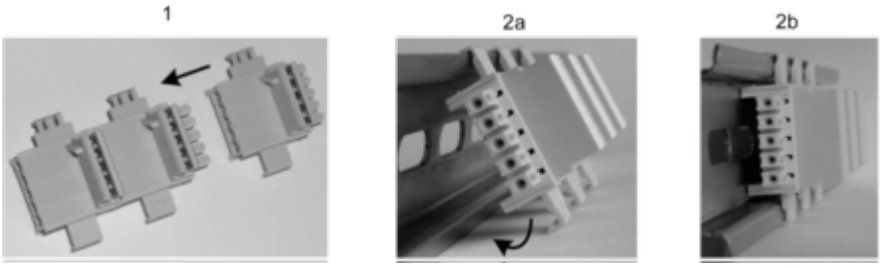

1 : Connect as much Backplane Connector as module to be install.
2 : Fix the connectors to the rail (Top first).

Mount Safety Controller CPU with Other Module(s)

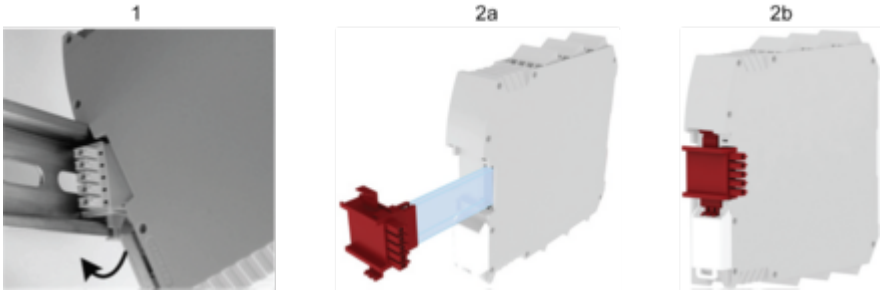

1 : Mount controller CPU and modules on rail.
2 : Make sure that the controller CPU or the module(s) are plugged on the BackPlane connector.

Connections and Schema

Wiring

Terminal Designation

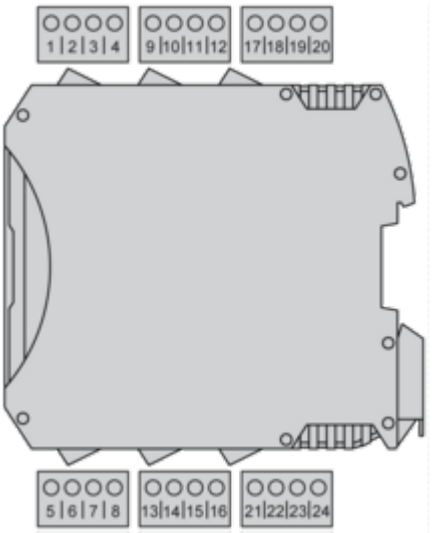

Terminal	Signal	Description
1	24 VDC	24 Vdc power supply
2	MASTER_ENABLE1	Master enable 1
3	MASTER_ENABLE2	Master enable 2
4	0 VDC	0 Vdc power supply
5	OSSD1_A	Static output 1
6	OSSD1_B	
7	RESTART1	Feedback/Restart 1
8	OUT_STATUS 1	Programmable digital output
9	OSSD2_A	Static output 2
10	OSSD2_B	
11	RESTART2	Feedback/Restart 2
12	OUT_STATUS 2	Programmable digital output
13	OUT_TEST1	Short circuit detected output
14	OUT_TEST2	
15	OUT_TEST3	
16	OUT_TEST4	

Terminal	Signal	Description
17	INPUT1	Digital input 1
18	INPUT2	Digital input 2
19	INPUT3	Digital input 3
20	INPUT4	Digital input 4
21	INPUT5	Digital input 5
22	INPUT6	Digital input 6
23	INPUT7	Digital input 7
24	INPUT8	Digital input 8

Wiring Example

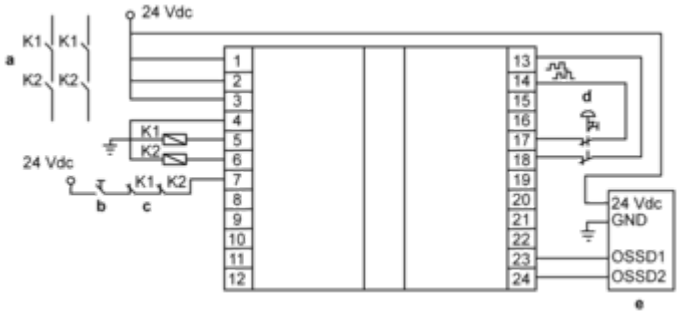

a : Contactors
b : Restart
c : Feedback
d : Emergency stop
e : Light curtain

Image of product / Alternate images

Alternative



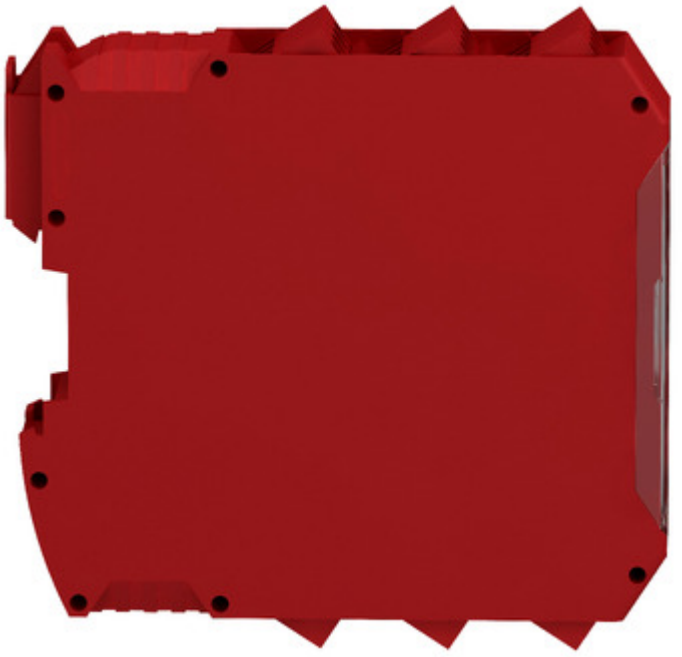



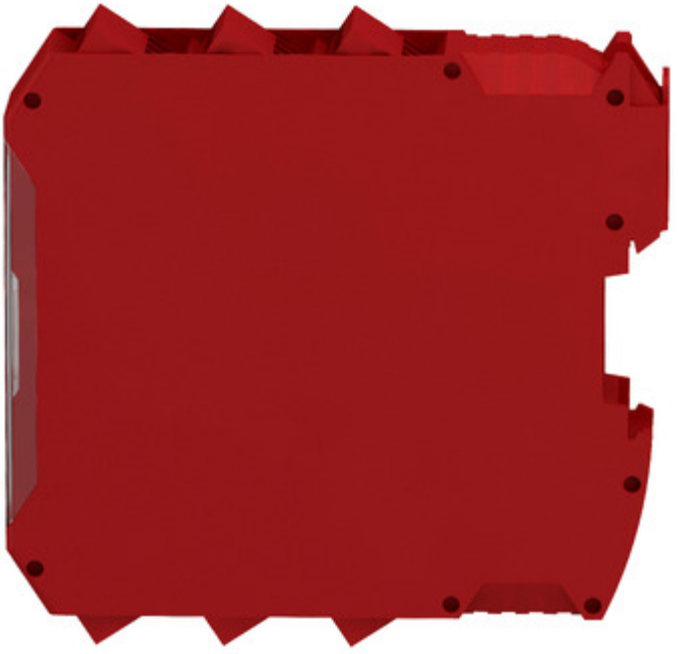


PREVENTA
PWR RUN
E IN E EX
COM EN
CP0802
IN 1 2 3 4 5 6 7 8
OUT 1 2
RST 1 2
STATUS 1 2
Schneider Electric

