Product data sheet

Specifications



safety module, Harmony XPSU, Cat4, features XPSUAK with delayed outputs, 24V AC or DC, screw

XPSUAT13A3AP

Product availability: Stock - Normally stocked in distribution facility

Main

Range of Product	Harmony Safety Automation
Product or Component Type	Safety module
Safety module name	XPSUAT
Safety module application	Monitoring antivalent contacts For emergency stop, guard and light curtain monitoring Monitoring of pressure-sensitive 4-wire protective devices
Function of module	Emergency stop button with 2 NC contacts Guard monitoring with 1 or 2 limit switches Monitoring 2 PNP sensors Magnetic switch monitoring Light curtain monitoring RFID switch Monitoring of electro-sensitive protection equipment (ESPE) Sensing mat/edges Proximity sensor monitoring Monitoring 1 PNP + 1 NPN sensor
Safety level	Can reach PL e/category 4 for normally open relay contact ISO 13849-1 Can reach SILCL 3 for normally open relay contact IEC 62061 Can reach SIL 3 for normally open relay contact IEC 61508 Can reach PL c/category 1 for normally closed relay contact ISO 13849-1 Can reach SILCL 1 for normally closed relay contact IEC 62061 Can reach SIL 1 for normally closed relay contact IEC 61508
Safety reliability data	MTTFd > 30 years ISO 13849-1 Dcavg >= 99 % ISO 13849-1 PFHd = 0.94E-09 for SS0 ISO 13849-1 PFHd = 0.95E-09 for SS1 ISO 13849-1 HFT = 1 IEC 62061 PFHd = 0.94E-09 for SS0 IEC 62061 PFHd = 0.95E-09 for SS1 IEC 62061 SFF > 99% IEC 62061 HFT = 1 IEC 61508-1 PFHd = 0.94E-09 for SS0 IEC 61508-1 PFHd = 0.95E-09 for SS1 IEC 61508-1 SFF > 99% IEC 61508-1 Type = B IEC 61508-1
Electrical circuit type	NC pair PNP pair Antivalent pair OSSD pair
Connections - terminals	Removable screw terminal block, 0.2...2.5 mm² solid or flexible Removable screw terminal block, 0.25...2.5 mm² flexible with ferrule single conductor Removable screw terminal block, 0.2...1.5 mm² solid or flexible twin conductor Removable screw terminal block, 2 x 0.25...1 mm² flexible with ferrule without cable end, with bezel Removable screw terminal block, 2 x 0.5...1.5 mm² flexible with ferrule with cable end, with bezel
[Us] Rated Supply Voltage	24 V AC - 15...10 % 24 V DC - 20...20 %

Price is “List Price” and may be subject to a trade discount – check with your local distributor or retailer for actual price.

Disclaimer: This documentation is not intended as a substitute for and is not to be used for determining suitability or reliability of these products for specific user applications

Complementary

Synchronisation time between inputs	0.5 s 2 s 4 s
Type of start	Automatic/manual/monitored
Power consumption in W	3 W 24 V DC
Power consumption in VA	6.5 VA 24 V AC 50/60 Hz
Input protection type	Internal, electronic
safety outputs	1 NC configurable 3 NO configurable 3 NO immediate
safety inputs	2 positive safety input 24 V DC 8 mA 1 negative safety input
maximum wire resistance	500 Ohm
Time delay range	0...900 s off
Input compatibility	Normally closed circuit ISO 14119 XC limit switch ISO 14119 Mechanical contact ISO 14119 Normally closed circuit ISO 13850 Antivalent pair ISO 14119 OSSD pair IEC 61496-1-2 3-wire proximity sensors PNP
[Ie] rated operational current	5 A AC-1 for normally open relay contact 3 A AC-15 for normally open relay contact 5 A DC-1 for normally open relay contact 3 A DC-13 for normally open relay contact 3 A AC-1 for normally closed relay contact 1 A AC-15 for normally closed relay contact 3 A DC-1 for normally closed relay contact 1 A DC-13 for normally closed relay contact
control outputs	4 on/off configurable pulsed output
Input/output type	Semiconductor output 24 V DC, 20 mA Z2, not safety-related Pulsed output for diagnostics 24 V DC, 20 mA Z1, not safety-related
[Ith] conventional free air thermal current	16 A
Associated fuse rating	10 A gG NO relay output circuit IEC 60947-1
Minimum output current	20 mA relay output
Minimum output voltage	24 V relay output
Maximum response time on input open	20 ms
[Ui] rated insulation voltage	250 V 2)IEC 60947-1
[Uimp] rated impulse withstand voltage	4 kV II IEC 60947-1
Mounting Support	35 mm symmetrical DIN rail
Depth	4.7 in (120 mm)
Height	3.9 in (100 mm)
Width	1.8 in (45 mm)
Net Weight	0.772 lb(US) (0.350 kg)

Environment

Standards	IEC 60947-5-1 IEC 61508-1 functional safety standard IEC 61508-2 functional safety standard IEC 61508-3 functional safety standard IEC 61508-4 functional safety standard IEC 61508-5 functional safety standard IEC 61508-6 functional safety standard IEC 61508-7 functional safety standard ISO 13849-1 functional safety standard IEC 62061 functional safety standard
Product Certifications	TÜV cULus
IP degree of protection	IP54 mounting area)IEC 60947-1 IP40 housing)IEC 60947-1 IP20 terminals)IEC 60947-1
Ambient Air Temperature for Storage	-13…185 °F (-25…85 °C)
Relative Humidity	5…95 % non-condensing

Ordering and shipping details

Category	US1SAF222477
Discount Schedule	SAF2
GTIN	3606489601690
Returnability	Yes
Country of origin	ID

Packing Units

Unit Type of Package 1	PCE
Nbr. of units in pkg.	1
Package 1 Height	2.559 in (6.500 cm)
Package 1 Width	6.102 in (15.500 cm)
Package 1 Length	5.315 in (13.500 cm)
Package weight(Lbs)	15.520 oz (440.000 g)
Unit Type of Package 2	S03
Number of Units in Package 2	16
Package 2 Height	11.811 in (30.000 cm)
Package 2 Width	11.811 in (30.000 cm)
Package 2 Length	15.748 in (40.000 cm)
Package 2 Weight	16.989 lb(US) (7.706 kg)
Unit Type of Package 3	P06
Number of Units in Package 3	128
Package 3 Height	30.315 in (77.000 cm)
Package 3 Width	23.622 in (60.000 cm)
Package 3 Length	31.496 in (80.000 cm)
Package 3 Weight	159.086 lb(US) (72.160 kg)

Contractual warranty

Warranty (in months)	18

Environmental Data

Schneider Electric aims to achieve Net Zero status by 2050 through supply chain partnerships, lower impact materials, and circularity via our ongoing “Use Better, Use Longer, Use Again” campaign to extend product lifetimes and recyclability.

Environmental Data explained >

How we assess product sustainability >

Environmental footprint

Total lifecycle Carbon footprint	**106 kg CO2 eq.**
Carbon footprint of the manufacturing phase [A1 to A3]	**8 kg CO2 eq.**
Carbon footprint of the distribution phase [A4]	**0.2 kg CO2 eq.**
Carbon footprint of the installation phase [A5]	**0 kg CO2 eq.**
Carbon footprint of the use phase [B2, B3, B4, B6]	**97 kg CO2 eq.**
Carbon footprint of the end-of-life phase [C1 to C4]	**1 kg CO2 eq.**
Environmental Disclosure	Product Environmental Profile

Use Better

Materials and Substances

Packaging made with recycled cardboard	**Yes**
Packaging without single use plastic	**No**
SCIP Number	**152cf799-1df7-4892-81b4-4c890187f1d1**
EU RoHS Directive	Compliant By Exemption
REACh Regulation	Reference contains Substances of Very High Concern above the threshold
California proposition 65	**WARNING: This product can expose you to chemicals including: Lead and lead compounds, which is known to the State of California to cause cancer and birth defects or other reproductive harm. For more information go to www.P65Warnings.ca.gov**
PVC free	**Yes**

Use Longer

Lifetime extension

Repair	**No**

Use Again

Repack and remanufacture

Recyclability potential, in %	**0**
Circularity Profile	End of Life Information
Take-back	**No**
WEEE Label	**The product must be disposed on European Union markets following specific waste collection and never end up in rubbish bins.**

Dimensions Drawings

Dimensions

Front and Side Views

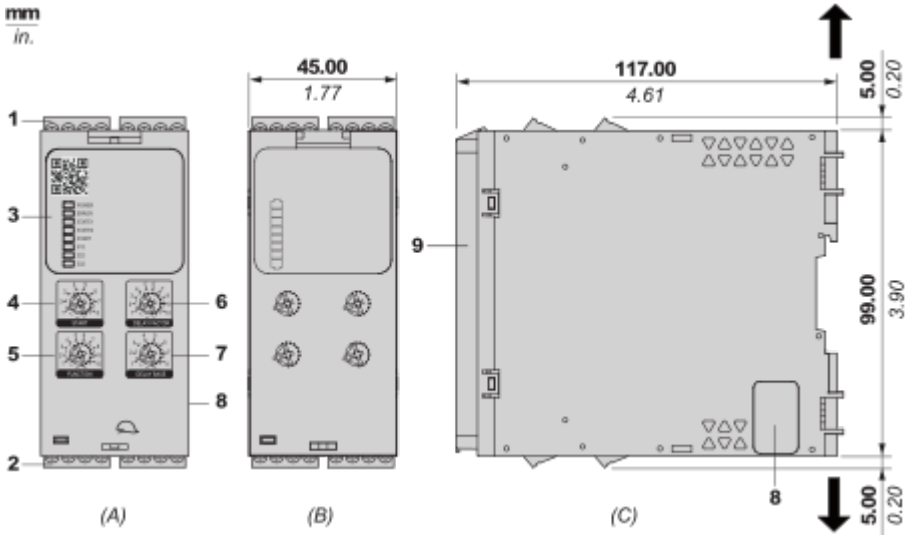

(A) : Product drawing
(B) : Screw clamp terminal
(C) : Side view
(1) : Removable terminal blocks, top
(2) : Removable terminal blocks, bottom
(3) : LED indicators
(4) : Start function selector
(5) : Function selector
(6) : Delay factor selector
(7) : Delay base selector
(8) : Connector for optional output extension module (lateral)
(9) : Sealable transparent cover

mm / in. 7.0–8.0 / 0.28–0.31					
mm^2	0,2... 2,5	0,25...2,5	0,2...1,5	0,25...1	0,5...1,5
AWG	24... 12	24...12	24...16	24...18	20...16
Ø 3,5 mm (0.14 in)		C		Nm	0.5... 0.6
				lb-in	4,4... 5,3

Mounting and Clearance

Mounting to DIN rail

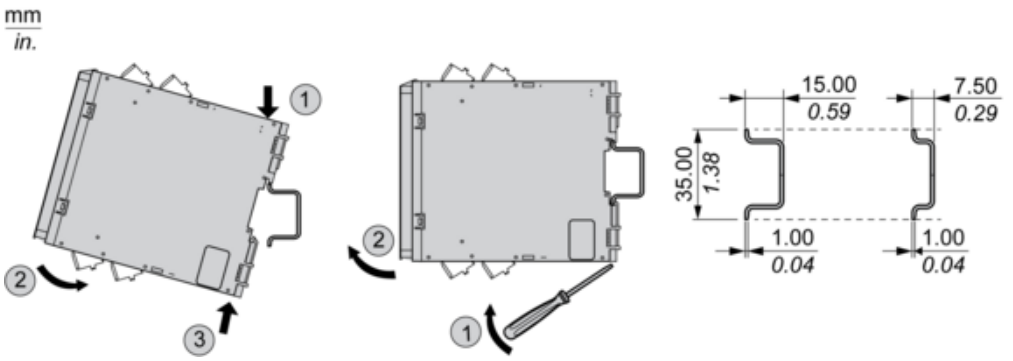

Screw-mounting

mm
in.

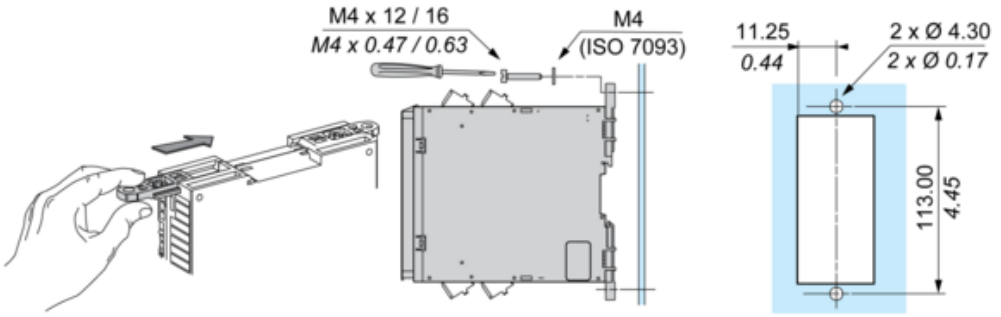

Connections and Schema

Wiring Drawing

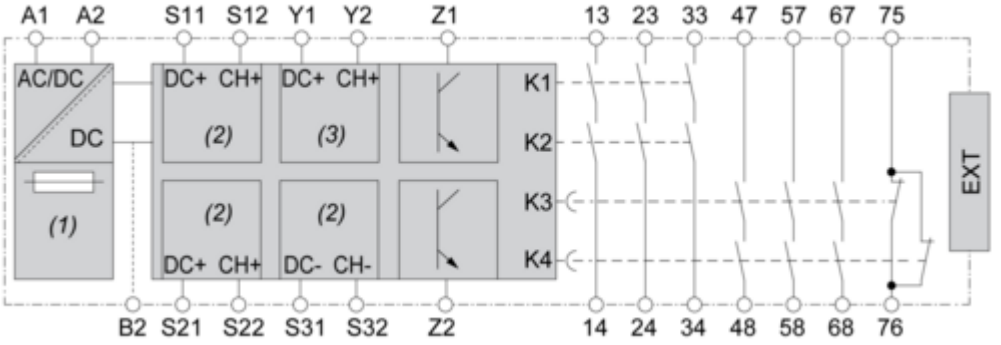

(1) : A1-A2 (Power supply)
(2) : S11-S12-S21-S22-S31-S32 (Single-channel safety input)
(3) : Y1-Y2 (Start)
13-23-33-47-57-67-75-14-24-34-48-58-68-76 : Output
EXT : Connector for optional extension module
B2 : Common ground terminal
Z1 : Pulsed output for diagnostics, not safety-related
Z2 : Solid state output, not safety-related

Image of product / Alternate images

Alternative



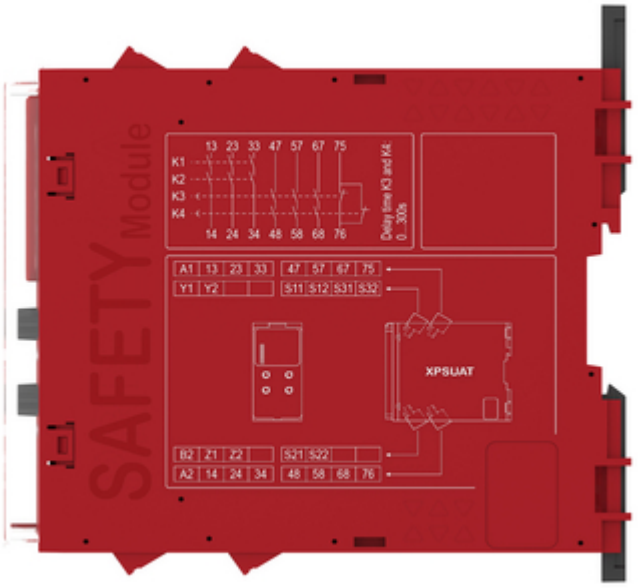

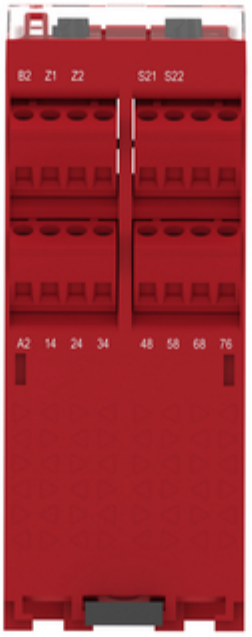
B2 Z1 Z2
S21 S22
A2 14 24 34
48 58 68 76

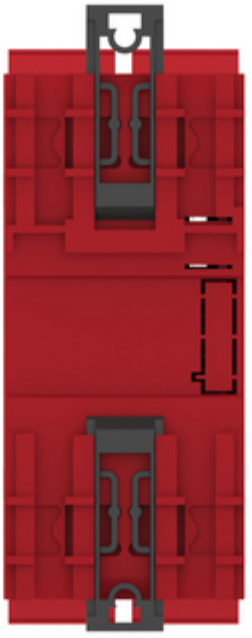


A1 13 23 33 47 57 67 75
Y1 Y2 S11 S12 S31 S32

