Product data sheet

Specifications



Rotating beacon, Harmony XVR, 130mm, red, without buzzer, 120V AC

XVR13G04L

Product availability: Stock - Normally stocked in distribution facility

Main

Range of Product	Harmony XVR
Product or Component Type	Prewired rotating mirror beacon
Sound signalling	Without
Device short name	XVR
Mounting diameter	5.1 in (130 mm)
IP degree of protection	IP66 IEC 60529 IP67 IEC 60529
[Us] rated supply voltage	120 V AC
Light source	High luminosity LED, red

Complementary

Material	ABS (acrylonitrile butadiene-styrene): body part PC: globe
CAD overall width	5.1 in (130 mm)
CAD overall depth	5.1 in (130 mm)
Net Weight	2.18 lb(US) (0.99 kg)
Marking	CE
Product mounting	By 3 M6 screws
[Uimp] rated impulse withstand voltage	4 kV
Current Consumption	42 mA
Flashing frequency	2.7 Hz
Clamping Connection Capacity	1.25 mm²
AWG Gauge	18 AWG
Cable length	15.7 in (400 mm)

Environment

Standards	IEC 60947-5-1 IEC 60947-1
Protective treatment	TC
Ambient Air Temperature for Storage	-31…158 °F (-35…70 °C)
Ambient Air Temperature for Operation	-22…122 °F (-30…50 °C)
Electrical shock protection class	Class II IEC 61140

Price is “List Price” and may be subject to a trade discount – check with your local distributor or retailer for actual price.

Disclaimer: This documentation is not intended as a substitute for and is not to be used for determining suitability or reliability of these products for specific user applications

Ordering and shipping details

Category	US100XV22617
Discount Schedule	00XV
GTIN	3389119045308
Returnability	Yes
Country of origin	ID

Packing Units

Unit Type of Package 1	PCE
Nbr. of units in pkg.	1
Package 1 Height	12.008 in (30.500 cm)
Package 1 Width	7.874 in (20.000 cm)
Package 1 Length	7.874 in (20.000 cm)
Package weight(Lbs)	2.952 lb(US) (1.339 kg)
Unit Type of Package 2	S04
Number of Units in Package 2	6
Package 2 Height	11.811 in (30.000 cm)
Package 2 Width	15.748 in (40.000 cm)
Package 2 Length	23.622 in (60.000 cm)
Package 2 Weight	20.283 lb(US) (9.200 kg)

Contractual warranty

Warranty (in months)	18

Environmental Data

Schneider Electric aims to achieve Net Zero status by 2050 through supply chain partnerships, lower impact materials, and circularity via our ongoing “Use Better, Use Longer, Use Again” campaign to extend product lifetimes and recyclability.

Environmental Data explained >

How we assess product sustainability >

Environmental footprint

Total lifecycle Carbon footprint	**24 kg CO2 eq.**
Carbon footprint of the manufacturing phase [A1 to A3]	**8 kg CO2 eq.**
Carbon footprint of the distribution phase [A4]	**0.2 kg CO2 eq.**
Carbon footprint of the installation phase [A5]	**1 kg CO2 eq.**
Carbon footprint of the use phase [B2, B3, B4, B6]	**14 kg CO2 eq.**
Carbon footprint of the end-of-life phase [C1 to C4]	**2 kg CO2 eq.**
Environmental Disclosure	**Product Environmental Profile**

Use Better

Materials and Substances

Packaging made with recycled cardboard	**Yes**
Packaging without single use plastic	**No**
EU RoHS Directive	**Compliant By Exemption**
REACh Regulation	**Reference contains Substances of Very High Concern above the threshold**
California proposition 65	**WARNING: This product can expose you to chemicals including: Lead and lead compounds, which is known to the State of California to cause cancer and birth defects or other reproductive harm. For more information go to www.P65Warnings.ca.gov**

Use Again

Repack and remanufacture

Circularity Profile	**End of Life Information**
Take-back	**No**

Dimensions Drawings

Rotating Mirror Beacon

Dimensions

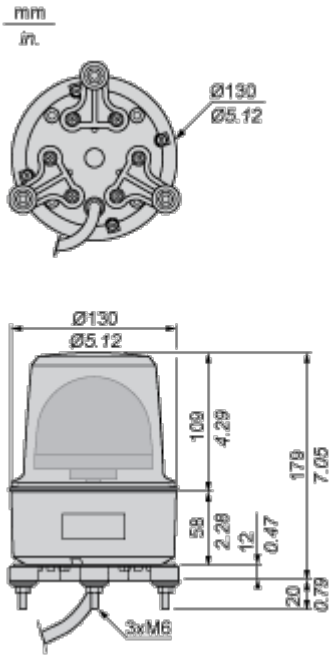

Mounting and Clearance

Rotating Mirror Beacon

Panel Cut-out

