Product data sheet

Specifications



Multisound siren, Harmony XVS, prewired, white colour, 0...105dB, 43tones, 12...24V DC

XVS14BMW

Product availability: Stock - Normally stocked in distribution facility

Main

Range of Product	Harmony XVS
Product or Component Type	Multisound siren
Device short name	XVS

Complementary

Color	White
Material	ASA (Acrylonitrile Styrene Acrylate): front ASA (Acrylonitrile Styrene Acrylate): back PC (polycarbonate): back cover
Net Weight	2.2 lb(US) (1 kg)
Marking	CE
Mounting Support	Bracket
Fixing Mode	3 holes Ø 9 mm
[Uimp] rated impulse withstand voltage	0.8 kV
Current consumption	350 mA 24 V 250 mA 12 V
Electrical connection	Cable 0.3…0.3 in (6.5…8.5 mm), 0.0005 in² (0.33 mm²) / 22 AWG signalling circuit) Cable 0.3…0.3 in (6.5…8.5 mm), 0.0008 in² (0.52 mm²) / 20 AWG power circuit)
Width	5.5 in (140 mm)
Height	4.5 in (114 mm)
Depth	8.8 in (223 mm)

Environment

Signalling type	43 tones siren
Standards	IEC 61000-6-2 EN 55014-2 EN 55022 IEC 61000-6-3
Product Certifications	UL
Protective treatment	TC
Ambient Air Temperature for Storage	-31…158 °F (-35…70 °C)
Ambient Air Temperature for Operation	14…122 °F (-10…50 °C)
Overvoltage category	Class II conforming to IEC 61140
IP degree of protection	IP53 conforming to IEC 60529

Price is “List Price” and may be subject to a trade discount – check with your local distributor or retailer for actual price.

Disclaimer: This documentation is not intended as a substitute for and is not to be used for determining suitability or reliability of these products for specific user applications

[Us] rated supply voltage	12 V DC 24 V DC
Noise level	0…105 dB continuous or intermittent tone)1 m

Ordering and shipping details

Category	US100XV22617
Discount Schedule	00XV
GTIN	3606480032943
Returnability	Yes
Country of origin	ID

Packing Units

Unit Type of Package 1	PCE
Nbr. of units in pkg.	1
Package 1 Height	10.827 in (27.500 cm)
Package 1 Width	6.299 in (16.000 cm)
Package 1 Length	6.299 in (16.000 cm)
Package weight(Lbs)	2.954 lb(US) (1.340 kg)
Unit Type of Package 2	S04
Number of Units in Package 2	6
Package 2 Height	11.811 in (30.000 cm)
Package 2 Width	15.748 in (40.000 cm)
Package 2 Length	23.622 in (60.000 cm)
Package 2 Weight	20.507 lb(US) (9.302 kg)

Contractual warranty

Warranty (in months)	18

Environmental Data

Schneider Electric aims to achieve Net Zero status by 2050 through supply chain partnerships, lower impact materials, and circularity via our ongoing “Use Better, Use Longer, Use Again” campaign to extend product lifetimes and recyclability.

Environmental Data explained >

How we assess product sustainability >

Environmental footprint

Total lifecycle Carbon footprint	**13 kg CO2 eq.**
Carbon footprint of the manufacturing phase [A1 to A3]	**10 kg CO2 eq.**
Carbon footprint of the distribution phase [A4]	**0.2 kg CO2 eq.**
Carbon footprint of the installation phase [A5]	**0.6 kg CO2 eq.**
Carbon footprint of the use phase [B2, B3, B4, B6]	**0.1 kg CO2 eq.**
Carbon footprint of the end-of-life phase [C1 to C4]	**2 kg CO2 eq.**
Environmental Disclosure	**Product Environmental Profile**

Use Better

Materials and Substances

Packaging made with recycled cardboard	**Yes**
Packaging without single use plastic	**Yes**
SCIP Number	**Fe0ee3ab-dd49-4abe-bd8e-c49754e2c442**
EU RoHS Directive	**Compliant By Exemption**
REACh Regulation	**Reference contains Substances of Very High Concern above the threshold**
California proposition 65	**WARNING: This product can expose you to chemicals including: Lead and lead compounds, which is known to the State of California to cause cancer and birth defects or other reproductive harm. For more information go to www.P65Warnings.ca.gov**

Use Again

Repack and remanufacture

Recyclability potential, in %	**18**
Circularity Profile	**End of Life Information**
Take-back	**No**

Dimensions Drawings

Siren

Dimensions

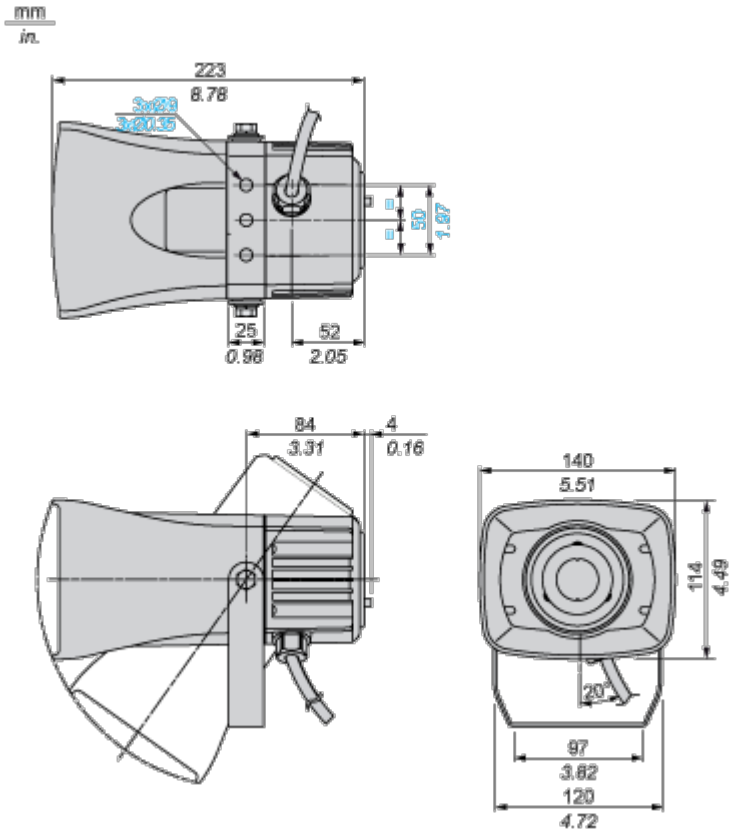

Image of product / Alternate images

Alternative

