Product data sheet

Specifications



Discontinued

Modular tower light, Harmony XVU, audible unit, black, 60mm, buzzer, 24V AC DC

XVUC9S

Discontinued on: Feb 27, 2026

End-of-service on: Jun 30, 2026

Product availability: Stock - Normally stocked in distribution facility

Main

Range of Product	Harmony XVU
Product or Component Type	Modular tower light
Beacon or indicator bank unit type	Buzzer unit
Mounting diameter	2.4 in (60 mm)
Component name	XVU
Housing Colour	Black

Complementary

Signalling type	Continuous or intermittent buzzer
Material	PBT (polybutylene terephthalate) V-0 UL 94 ABS (acrylonitrile butadiene-styrene) V-0 UL 94 PC (polycarbonate) V-0 UL 94
Localisation on device	Top
Assembly style	Customer assembly
[Us] rated supply voltage	24 V AC/DC
Maximum power dissipation in W	1.7 W
Acoustic level	85 dB 1 m
Sound frequency	2635 Hz
Current consumption	<= 70 mA
Length	2.3 in (58 mm)
Net Weight	0.170 lb(US) (0.077 kg)

Environment

Product Certifications	UL CE CSA
Ambient Air Temperature for Storage	-40…158 °F (-40…70 °C)
Ambient Air Temperature for Operation	-13…122 °F (-25…50 °C)
IP degree of protection	IP54

Ordering and shipping details

Price is “List Price” and may be subject to a trade discount – check with your local distributor or retailer for actual price.

Disclaimer: This documentation is not intended as a substitute for and is not to be used for determining suitability or reliability of these products for specific user applications

Category	US100XV22618
Discount Schedule	00XV
GTIN	3606480555879
Returnability	Yes
Country of origin	ID

Packing Units

Unit Type of Package 1	PCE
Nbr. of units in pkg.	1
Package 1 Height	3.5 in (9 cm)
Package 1 Width	5.2 in (13.3 cm)
Package 1 Length	3.6 in (9.1 cm)
Package weight(Lbs)	6.07 oz (172 g)
Unit Type of Package 2	S03
Number of Units in Package 2	24
Package 2 Height	11.8 in (30 cm)
Package 2 Width	11.8 in (30 cm)
Package 2 Length	15.7 in (40 cm)
Package 2 Weight	11.001 lb(US) (4.99 kg)
Unit Type of Package 3	PAL
Number of Units in Package 3	192
Package 3 Height	27.6 in (70 cm)
Package 3 Width	31.5 in (80 cm)
Package 3 Length	23.6 in (60 cm)
Package 3 Weight	87.48 lb(US) (39.68 kg)

Contractual warranty

Warranty (in months)	18

Environmental Data

Schneider Electric aims to achieve Net Zero status by 2050 through supply chain partnerships, lower impact materials, and circularity via our ongoing “Use Better, Use Longer, Use Again” campaign to extend product lifetimes and recyclability.

Environmental Data explained >

How we assess product sustainability >

Environmental footprint

Total lifecycle Carbon footprint	**18 kg CO2 eq.**
Carbon footprint of the manufacturing phase [A1 to A3]	**0.5 kg CO2 eq.**
Carbon footprint of the distribution phase [A4]	**0 kg CO2 eq.**
Carbon footprint of the installation phase [A5]	**0.1 kg CO2 eq.**
Carbon footprint of the use phase [B2, B3, B4, B6]	**17 kg CO2 eq.**
Carbon footprint of the end-of-life phase [C1 to C4]	**0.1 kg CO2 eq.**
Environmental Disclosure	**Product Environmental Profile**

Use Better

Materials and Substances

Packaging made with recycled cardboard	**Yes**
Packaging without single use plastic	**Yes**
SCIP Number	**C06fce4f-aea2-46a5-aadb-0b38d1efbe3f**
EU RoHS Directive	**Compliant By Exemption**
REACh Regulation	**Reference contains Substances of Very High Concern above the threshold**
California proposition 65	**WARNING: This product can expose you to chemicals including: Lead and lead compounds, which is known to the State of California to cause cancer and birth defects or other reproductive harm. For more information go to www.P65Warnings.ca.gov**

Use Again

Repack and remanufacture

Recyclability potential, in %	**16**
Circularity Profile	**End of Life Information**
Take-back	**No**

Dimensions Drawings

Buzzer Unit

Dimensions

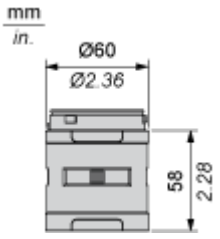

Mounting and Clearance

Modular Tower Lights Mounting

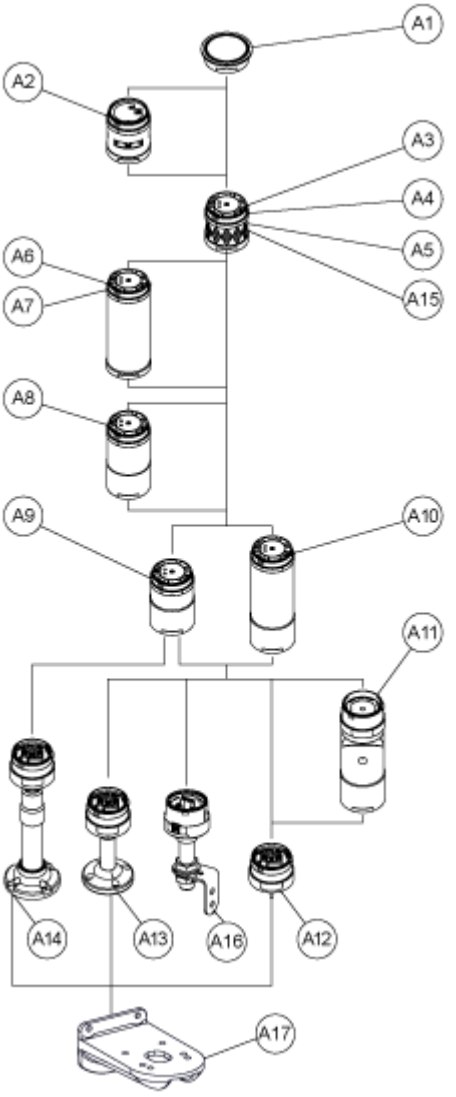

Drawing	Part number	Part name
A1	-	Top cover
	-	Top cover (Silver)
A2	XVUC9S	Buzzer unit
	XVUC9SQ	Buzzer unit (Silver)
A3	XVUC23	Green LED unit
	XVUC24	Red LED unit
	XVUC25	Orange LED unit
	XVUC26	Blue LED unit

Drawing	Part number	Part name
	XVUC27	White LED unit
	XVUC28	Yellow LED unit
A4	XVUC29	Multi-LED unit
A5	XVUC29P	Multi-LED unit, Pulse signal
A6	XVUC9V	Sound unit
A7	XVUC9VP	Sound unit, Pulse signal
A8	XVUC020	Extender
	XVUC020Q	Extender (Silver)
A9	XVUC21B	DC body
	XVUC21BQ	DC body (Silver)
A10	XVUC21M	AC body NPN
	XVUC21MP	AC body PNP
	XVUC21MQP	AC body PNP (Silver)
A11	XVUZ06	Flexible option
A12	XVUZ01	Fixing Unit - Direct mounting (3 pins)
	XVUZ01Q	Fixing Unit - Direct mounting (Silver,3 pins)
	XVUZ03	Fixing Unit - Direct mounting (2 pins)
	XVUZ04	Fixing Unit - Direct mounting (4 pins)
A13	XVUZ02	Fixing Unit - Plate with Pole (100 mm)
	XVUZ02Q	Fixing Unit - Plate with Pole (100 mm, Silver)
	XVUZ400	Fixing Unit - Plate with Pole (400 mm)
	XVUZ800	Fixing Unit - Plate with Pole (800 mm)
A14	XVUZ05	Fixing Unit - Plate with adjustment pole (100-385 mm)
A15	XVUC43	Green LED unit, Flash
	XVUC44	Red LED unit, Flash
	XVUC45	Orange LED unit, Flash
	XVUC46	Blue LED unit, Flash

Drawing	Part number	Part name
	XVUC47	White LED unit, Flash
	XVUC48	Yellow LED unit, Flash
A16	XVUZ100T	Fixing Unit - Metal bracket with pole (100 mm)
	XVUZ250T	Fixing Unit - Metal bracket with pole(250 mm)
	XVUZ400T	Fixing Unit - Metal bracket with pole (400 mm)
A17	XVUZ12	Fixing plate for use on vertical support - black

Connections and Schema

Illuminated Units, Multi-LED and Audible Units Wiring

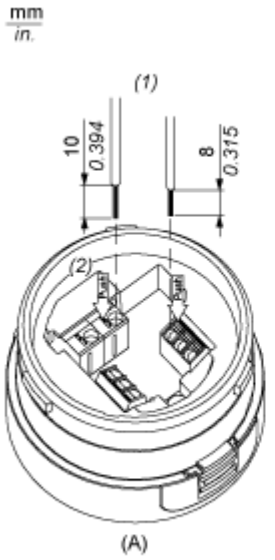

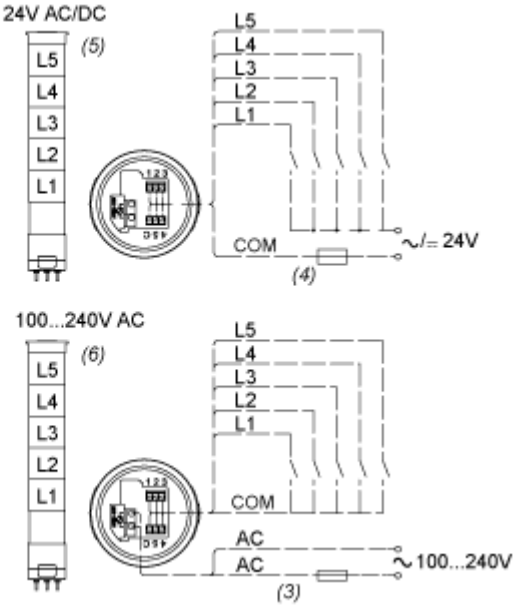

(A) Fixing Unit

(1) Dimensions of Wiring size

(2) Push-in Wire Connectors

(3) Fuse : 2A ,250V

(4) Fuse : 0.5A ,125V

(5) Modular Tower Lights 24V AC/DC

(6) Modular Tower Lights 100...240V AC

L1 to L5 : Illuminated LED Units

Image of product in real life situation

