Product data sheet

Specifications



Discontinued

Flexible mounting unit for use on horizontal or vertical support for modular tower lights, Harmony XVU, black, 60mm

XVUZ06

Discontinued on: Feb 27, 2026

End-of-service on: Jun 30, 2026

Product availability: Stock - Normally stocked in distribution facility

Main

Range of Product	Harmony XVU
Product or Component Type	Modular tower light
Accessory / Separate Part Type	Swivel mounting support
Accessory / separate part category	Mounting and fixing accessory
Component name	XVU
Mounting diameter	2.4 in (60 mm)

Complementary

Product compatibility	Top AC body Top DC body Bottom mounting plate
Function available	Orientable -90…90 °
Material	PBT (polybutylene terephthalate) V-0 UL 94 ABS (acrylonitrile butadiene-styrene) PC (polycarbonate)
[Us] Rated Supply Voltage	24 V AC/DC 110...240 V AC
Length	5.7 in (146 mm)
Net Weight	0.425 lb(US) (0.193 kg)

Environment

Ambient Air Temperature for Storage	-40…158 °F (-40…70 °C)
Ambient Air Temperature for Operation	-13…122 °F (-25…50 °C)
IP degree of protection	IP55
Product Certifications	CSA CE UL

Ordering and shipping details

Category	US100XV22618
Discount Schedule	00XV

Price is “List Price” and may be subject to a trade discount – check with your local distributor or retailer for actual price.

Disclaimer: This documentation is not intended as a substitute for and is not to be used for determining suitability or reliability of these products for specific user applications

GTIN	3606480555992
Returnability	Yes
Country of origin	ID

Packing Units

Unit Type of Package 1	PCE
Nbr. of units in pkg.	1
Package 1 Height	3.543 in (9.000 cm)
Package 1 Width	3.543 in (9.000 cm)
Package 1 Length	10.630 in (27.000 cm)
Package weight(Lbs)	13.404 oz (380.000 g)
Unit Type of Package 2	S04
Number of Units in Package 2	24
Package 2 Height	11.811 in (30.000 cm)
Package 2 Width	15.748 in (40.000 cm)
Package 2 Length	23.622 in (60.000 cm)
Package 2 Weight	22.763 lb(US) (10.325 kg)
Unit Type of Package 3	P06
Number of Units in Package 3	96
Package 3 Height	29.528 in (75.000 cm)
Package 3 Width	23.622 in (60.000 cm)
Package 3 Length	31.496 in (80.000 cm)
Package 3 Weight	89.508 lb(US) (40.600 kg)

Contractual warranty

Warranty (in months)	18

Environmental Data

Schneider Electric aims to achieve Net Zero status by 2050 through supply chain partnerships, lower impact materials, and circularity via our ongoing “Use Better, Use Longer, Use Again” campaign to extend product lifetimes and recyclability.

Environmental Data explained >

How we assess product sustainability >

Environmental footprint

Total lifecycle Carbon footprint	**3 kg CO2 eq.**
Carbon footprint of the manufacturing phase [A1 to A3]	**2 kg CO2 eq.**
Carbon footprint of the distribution phase [A4]	**0 kg CO2 eq.**
Carbon footprint of the installation phase [A5]	**0.4 kg CO2 eq.**
Carbon footprint of the use phase [B2, B3, B4, B6]	**0 kg CO2 eq.**
Carbon footprint of the end-of-life phase [C1 to C4]	**0.3 kg CO2 eq.**
Environmental Disclosure	**Product Environmental Profile**

Use Better

Materials and Substances

Packaging made with recycled cardboard	**Yes**
Packaging without single use plastic	**Yes**
SCIP Number	**C06fce4f-aea2-46a5-aadb-0b38d1efbe3f**
EU RoHS Directive	**Compliant By Exemption**
REACh Regulation	**Reference contains Substances of Very High Concern above the threshold**
California proposition 65	**WARNING: This product can expose you to chemicals including: Lead and lead compounds, which is known to the State of California to cause cancer and birth defects or other reproductive harm. For more information go to www.P65Warnings.ca.gov**

Use Again

Repack and remanufacture

Recyclability potential, in %	**16**
Circularity Profile	**End of Life Information**
Take-back	**No**

Dimensions Drawings

Flexible Unit

Dimensions

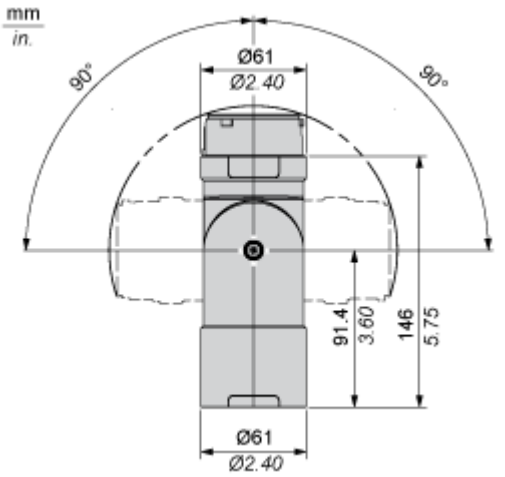

Mounting and Clearance

Modular Tower Lights Mounting

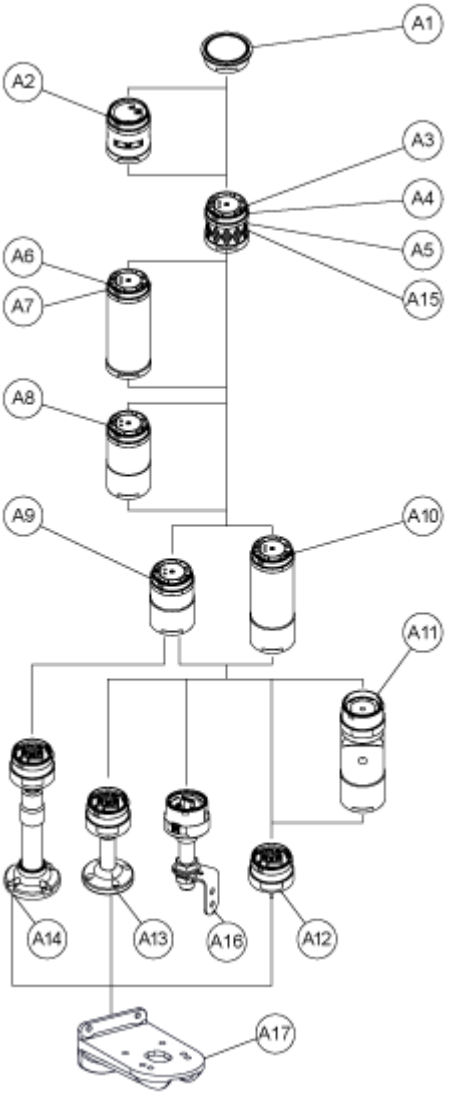

Drawing	Part number	Part name
A1	-	Top cover
	-	Top cover (Silver)
A2	XVUC9S	Buzzer unit
	XVUC9SQ	Buzzer unit (Silver)
A3	XVUC23	Green LED unit
	XVUC24	Red LED unit
	XVUC25	Orange LED unit
	XVUC26	Blue LED unit

Drawing	Part number	Part name
	XVUC27	White LED unit
	XVUC28	Yellow LED unit
A4	XVUC29	Multi-LED unit
A5	XVUC29P	Multi-LED unit, Pulse signal
A6	XVUC9V	Sound unit
A7	XVUC9VP	Sound unit, Pulse signal
A8	XVUC020	Extender
	XVUC020Q	Extender (Silver)
A9	XVUC21B	DC body
	XVUC21BQ	DC body (Silver)
A10	XVUC21M	AC body NPN
	XVUC21MP	AC body PNP
	XVUC21MQP	AC body PNP (Silver)
A11	XVUZ06	Flexible option
A12	XVUZ01	Fixing Unit - Direct mounting (3 pins)
	XVUZ01Q	Fixing Unit - Direct mounting (Silver,3 pins)
	XVUZ03	Fixing Unit - Direct mounting (2 pins)
	XVUZ04	Fixing Unit - Direct mounting (4 pins)
A13	XVUZ02	Fixing Unit - Plate with Pole (100 mm)
	XVUZ02Q	Fixing Unit - Plate with Pole (100 mm, Silver)
	XVUZ400	Fixing Unit - Plate with Pole (400 mm)
	XVUZ800	Fixing Unit - Plate with Pole (800 mm)
A14	XVUZ05	Fixing Unit - Plate with adjustment pole (100-385 mm)
A15	XVUC43	Green LED unit, Flash
	XVUC44	Red LED unit, Flash
	XVUC45	Orange LED unit, Flash
	XVUC46	Blue LED unit, Flash

Drawing	Part number	Part name
	XVUC47	White LED unit, Flash
	XVUC48	Yellow LED unit, Flash
A16	XVUZ100T	Fixing Unit - Metal bracket with pole (100 mm)
	XVUZ250T	Fixing Unit - Metal bracket with pole(250 mm)
	XVUZ400T	Fixing Unit - Metal bracket with pole (400 mm)
A17	XVUZ12	Fixing plate for use on vertical support - black

Flexible Option Mounting

Recommended Mounting

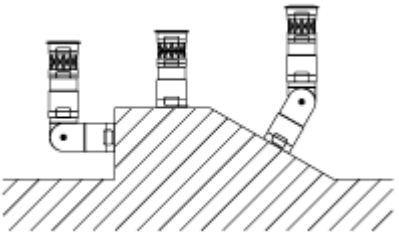

No Recommended Mounting

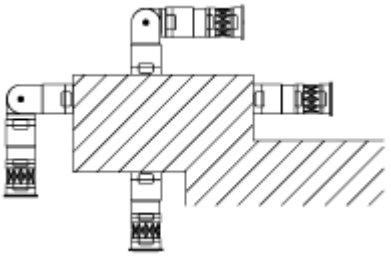

Connections and Schema

Illuminated Units, Multi-LED and Audible Units Wiring

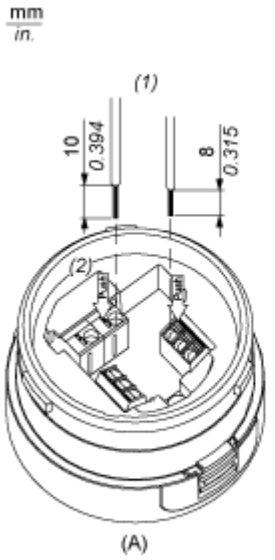

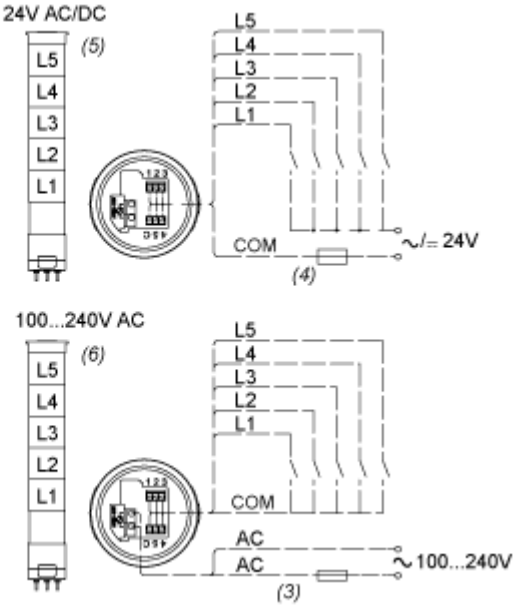

(A) Fixing Unit

(1) Dimensions of Wiring size

(2) Push-in Wire Connectors

(3) Fuse : 2A ,250V

(4) Fuse : 0.5A ,125V

(5) Modular Tower Lights 24V AC/DC

(6) Modular Tower Lights 100...240V AC

L1 to L5 : Illuminated LED Units

Image of product / Alternate images

Alternative







Image of product in real life situation

