Product data sheet

Specifications



head for illuminated push button, Harmony XB4, blue, projecting pushbutton, 22mm, spring return, BA9s bulb

ZB4BW16

Product availability: Stock - Normally stocked in distribution facility

Main

Range of Product	Harmony XB4
Product or Component Type	Head for illuminated push-button
Device short name	ZB4
Product Compatibility	BA 9s
Bezel material	Chromium plated metal
Head type	Standard
Mounting diameter	0.9 in (22.5 mm)
Sale per indivisible quantity	1
Shape of signaling unit head	Round
Type of operator	spring return
Operator profile	Blue projecting, unmarked
Operator additional information	With plain lens
Cap/operator or lens colour	Blue

Complementary

CAD overall width	1.1 in (29 mm)
CAD overall height	1.1 in (29 mm)
CAD overall depth	1.3 in (32 mm)
Net Weight	0.062 lb(US) (0.028 kg)
Resistance to high pressure washer	1015.3 psi (7000000 Pa) 131 °F (55 °C) 0.1 m
Mechanical durability	10000000 cycles
Electrical composition code	M7 6 single front mounting BA 9s M8 6 single and double front mounting BA 9s M9 2 single front mounting BA 9s and transformer
Device presentation	Basic sub-assemblies

Environment

Protective treatment	TH
Ambient Air Temperature for Storage	-40…158 °F (-40…70 °C)
Ambient Air Temperature for Operation	-40…131 °F (-40…55 °C)
Overvoltage category	Class I conforming to IEC 60536

Price is “List Price” and may be subject to a trade discount – check with your local distributor or retailer for actual price.

Disclaimer: This documentation is not intended as a substitute for and is not to be used for determining suitability or reliability of these products for specific user applications

IP degree of protection	IP66 IEC 60529 IP69 IP69K
Enclosure Type	UL type 4X/13
IK degree of protection	IK06 conforming to IEC 62262
Standards	IEC 60947-5-4 IEC 60947-5-5 UL 508 IEC 60947-5-1 JIS C8201-5-1 IEC 60947-1 CSA C22.2 No 14 JIS C8201-1
Product Certifications	CSA LROS (Lloyds register of shipping) BV UL Listed DNV
Vibration resistance	5 gn (f= 2…500 Hz) conforming to IEC 60068-2-6
Shock resistance	30 gn 18 ms) half sine wave acceleration IEC 60068-2-27 50 gn 11 ms) half sine wave acceleration IEC 60068-2-27

Ordering and shipping details

Category	US10CS222468
Discount Schedule	0CS2
GTIN	3389110889789
Returnability	Yes
Country of origin	CZ

Packing Units

Unit Type of Package 1	PCE
Nbr. of units in pkg.	1
Package 1 Height	1.3 in (3.4 cm)
Package 1 Width	1.7 in (4.4 cm)
Package 1 Length	2.09 in (5.3 cm)
Package weight(Lbs)	1.0 oz (27.0 g)
Unit Type of Package 2	S01
Number of Units in Package 2	50
Package 2 Height	5.9 in (15 cm)
Package 2 Width	5.9 in (15 cm)
Package 2 Length	15.7 in (40 cm)
Package 2 Weight	3.541 lb(US) (1.606 kg)

Contractual warranty

Warranty (in months)	18

Environmental Data

Schneider Electric aims to achieve Net Zero status by 2050 through supply chain partnerships, lower impact materials, and circularity via our ongoing “Use Better, Use Longer, Use Again” campaign to extend product lifetimes and recyclability.

Environmental Data explained >

How we assess product sustainability >

Environmental footprint

Total lifecycle Carbon footprint	**0.3 kg CO2 eq.**
Carbon footprint of the manufacturing phase [A1 to A3]	**0.2 kg CO2 eq.**
Carbon footprint of the distribution phase [A4]	**0 kg CO2 eq.**
Carbon footprint of the installation phase [A5]	**0 kg CO2 eq.**
Carbon footprint of the use phase [B2, B3, B4, B6]	**0 kg CO2 eq.**
Carbon footprint of the end-of-life phase [C1 to C4]	**0 kg CO2 eq.**

Use Better

Materials and Substances

Average percentage of recycled plastic content	**37 %**
Average percentage of recycled metal content	**21 %**
Packaging made with recycled cardboard	**No**
Packaging without single use plastic	**No**
EU RoHS Directive	**Compliant**
REACh Regulation	**Reference contains Substances of Very High Concern above the threshold**

Use Again

Repack and remanufacture

Circularity Profile	**End of Life Information**
Take-back	**No**

Dimensions Drawings

Dimensions

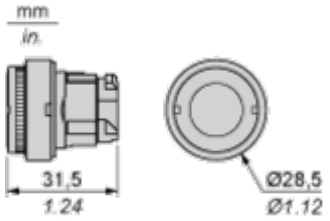

Mounting and Clearance

Panel Cut-out for Pushbuttons, Switches and Pilot Lights (Finished Holes, Ready for Installation)

Connection by Screw Clamp Terminals or Plug-in Connectors or on Printed Circuit Board	Connection by Faston Connectors
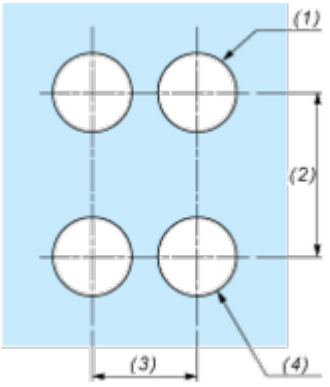	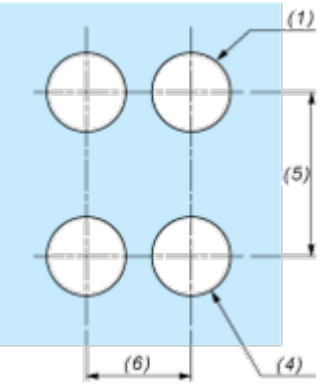
(1) Diameter on finished panel or support **(2)** 40 mm min. / 1.57 in. min. **(3)** 30 mm min. / 1.18 in. min. **(4)** Ø 22.5 mm / 0.89 in. recommended (Ø 22.3 mm $_{0}^{+0.4}$ / 0.88 in. $_{0}^{+0.016}$) **(5)** 45 mm min. / 1.78 in. min. **(6)** 32 mm min. / 1.26 in. min.	

Pushbuttons, Switches and Pilot Lights for Printed Circuit Board Connection

Panel Cut-outs (Viewed from Installer's Side)

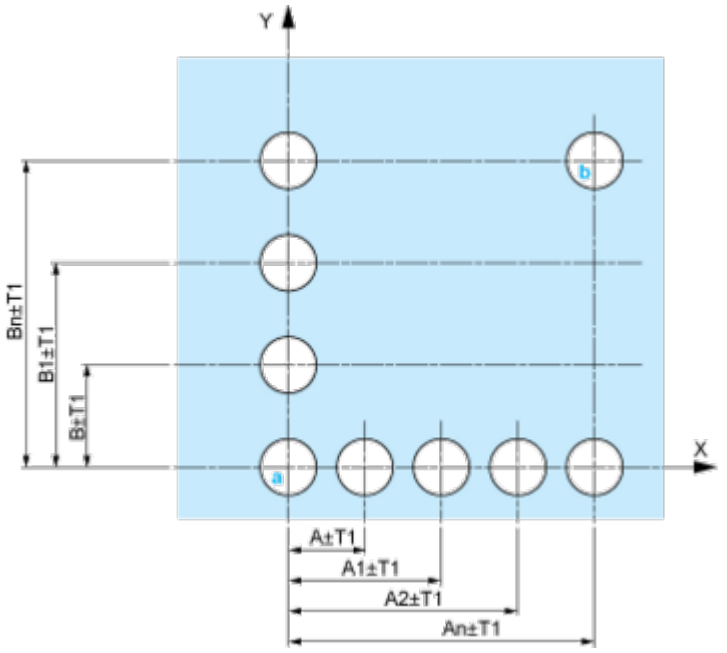

A: 30 mm min. / 1.18 in. min.
B: 40 mm min. / 1.57 in. min.

Printed Circuit Board Cut-outs (Viewed from Electrical Block Side)

Dimensions in mm

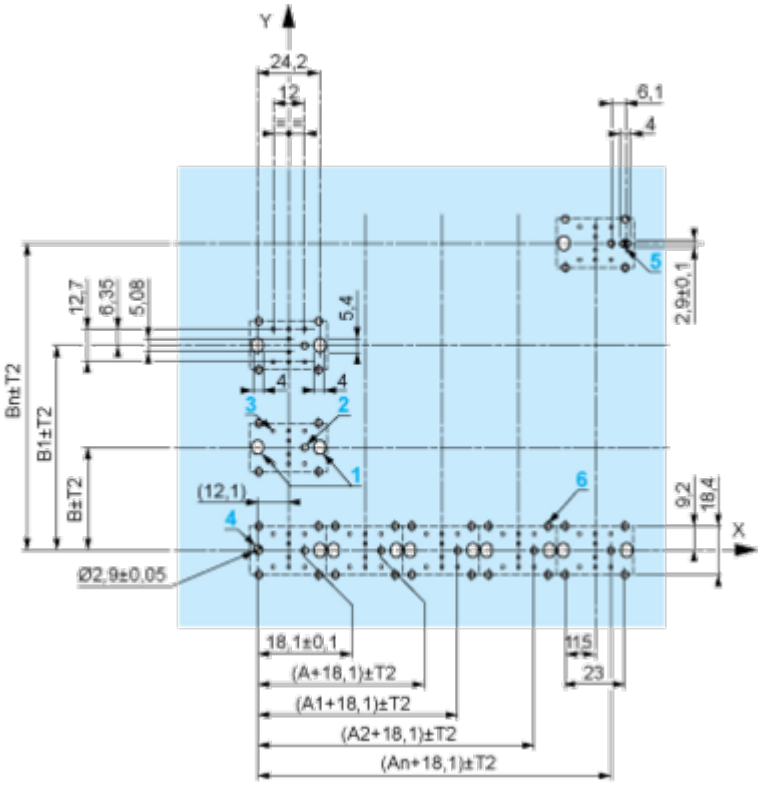

A: 30 mm min.
B: 40 mm min.
Dimensions in in.

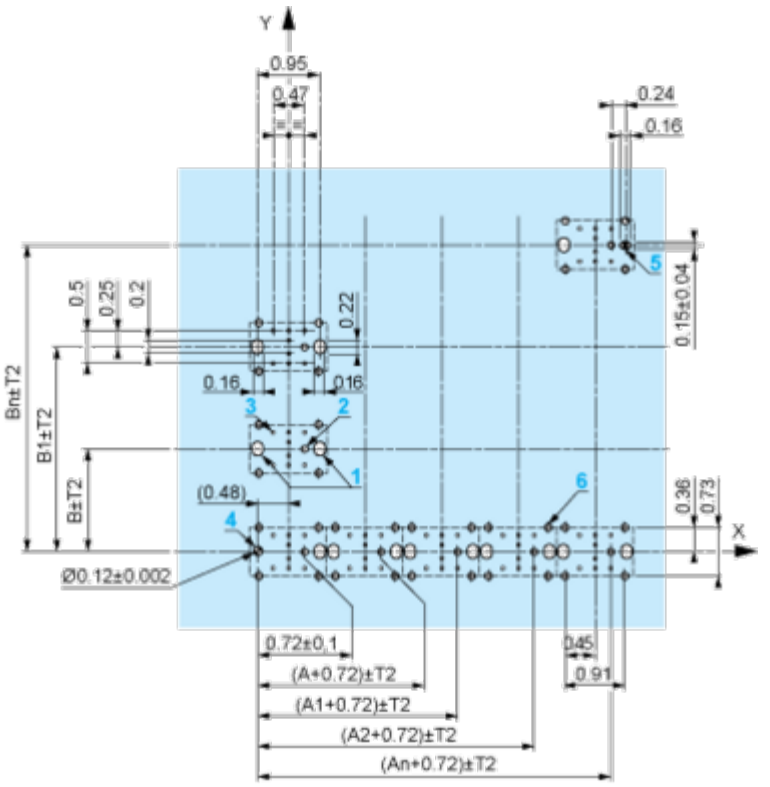

A: 1.18 in. min.
B: 1.57 in. min.

General Tolerances of the Panel and Printed Circuit Board

The cumulative tolerance must not exceed 0.3 mm / 0.012 in: T1 + T2 = 0.3 mm max.

Installation Precautions

- Minimum thickness of circuit board: 1.6 mm / 0.06 in.
- Cut-out diameter: 22.4 mm ± 0.1 / 0.88 in. ± 0.004
- Orientation of body/fixing collar ZB4 BZ009: ± 2°30' (excluding cut-outs marked **a** and **b**).
- Tightening torque of screws ZBZ 006: 0.6 N.m (5.3 lbf.in) max.
- Allow for one ZB4 BZ079 fixing collar/pillar and its fixing screws:
  - every 90 mm / 3.54 in. horizontally (X), and 120 mm / 4.72 in. vertically (Y).
  - with each selector switch head (ZB4 BD•, ZB4 BJ•, ZB4 BG•).

The fixing centers marked **a** and **b** are diagonally opposed and must align with those marked **4** and **5**.

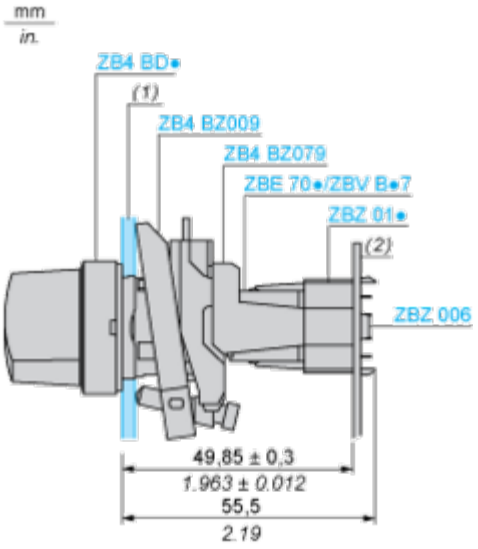

(1) Panel
(2) Printed circuit board

Mounting of Adapter (Socket) ZBZ 01•

- **1** 2 elongated holes for ZBZ 006 screw access
- **2** 1 hole Ø 2.4 mm ± 0.05 / 0.09 in. ± 0.002 for centring adapter ZBZ 01•
- **3** 8 × Ø 1.2 mm / 0.05 in. holes
- **4** 1 hole Ø 2.9 mm ± 0.05 / 0.11 in. ± 0.002, for aligning the printed circuit board (with cut-out marked **a**)
- **5** 1 elongated hole for aligning the printed circuit board (with cut-out marked **b**)
- **6** 4 holes Ø 2.4 mm / 0.09 in. for clipping in adapter ZBZ 01•

Dimensions An + 18.1 relate to the Ø 2.4 mm ± 0.05 / 0.09 in. ± 0.002 holes for centring adapter ZBZ 01•.

Technical Description

Electrical Composition Corresponding to Codes M1 and M7

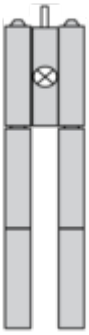

Electrical Composition Corresponding to Codes M2 and M8

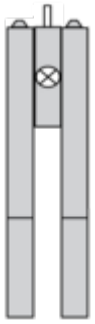

Electrical Composition Corresponding to Code M9



Legend

Single contact



Double contact



Light block



Possible location

