Product data sheet

Specifications

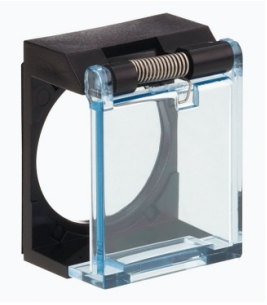

Protective shutter, Harmony XB6, for circular or square head 16mm

ZB6YA001

Product availability: Stock - Normally stocked in distribution facility

Main

Range of Product	Harmony XB6
Accessory / separate part designation	Protective shutter
Accessory / Separate Part Type	Shutter
Product or Component Type	Protective shutter
Accessory / separate part category	Protection accessories
Accessory / separate part destination	Circular button Square button
Quantity per Set	Set of 1

Complementary

Net Weight	0.007 lb(US) (0.003 kg)

Ordering and shipping details

Category	US10CS222459
Discount Schedule	0CS2
GTIN	3389110784688
Returnability	Yes
Country of origin	FR

Packing Units

Unit Type of Package 1	PCE
Nbr. of units in pkg.	1
Package 1 Height	1.1 in (2.8 cm)
Package 1 Width	1.5 in (3.9 cm)
Package 1 Length	2.05 in (5.2 cm)
Package weight(Lbs)	0.2 oz (5.0 g)
Unit Type of Package 2	S01
Number of Units in Package 2	80
Package 2 Height	5.9 in (15 cm)
Package 2 Width	5.9 in (15 cm)
Package 2 Length	15.7 in (40 cm)
Package 2 Weight	18.9 oz (535.0 g)

Price is “List Price” and may be subject to a trade discount – check with your local distributor or retailer for actual price.

Disclaimer: This documentation is not intended as a substitute for and is not to be used for determining suitability or reliability of these products for specific user applications

Contractual warranty

Warranty (in months)	18

Environmental Data

Schneider Electric aims to achieve Net Zero status by 2050 through supply chain partnerships, lower impact materials, and circularity via our ongoing “Use Better, Use Longer, Use Again” campaign to extend product lifetimes and recyclability.

Environmental Data explained >

How we assess product sustainability >

Environmental footprint

Total lifecycle Carbon footprint	**0.1 kg CO2 eq.**
Carbon footprint of the manufacturing phase [A1 to A3]	**0 kg CO2 eq.**
Carbon footprint of the distribution phase [A4]	**0 kg CO2 eq.**
Carbon footprint of the installation phase [A5]	**0 kg CO2 eq.**
Carbon footprint of the use phase [B2, B3, B4, B6]	**0 kg CO2 eq.**
Carbon footprint of the end-of-life phase [C1 to C4]	**0 kg CO2 eq.**
Environmental Disclosure	**Product Environmental Profile**

Use Better

Materials and Substances

Packaging made with recycled cardboard	**Yes**
Packaging without single use plastic	**No**
EU RoHS Directive	**Compliant**
REACh Regulation	**Free of Substances of Very High Concern above the threshold**
California proposition 65	**WARNING: This product can expose you to chemicals including: Di-isodecyl phthalate (DIDP), which is known to the State of California to cause birth defects or other reproductive harm. For more information go to www.P65Warnings.ca.gov**

Use Again

Repack and remanufacture

Recyclability potential, in %	**0**
Circularity Profile	**No need of specific recycling operations**
Take-back	**No**

Dimensions Drawings

Protective Shutter for Square or Circular Head

Dimensions

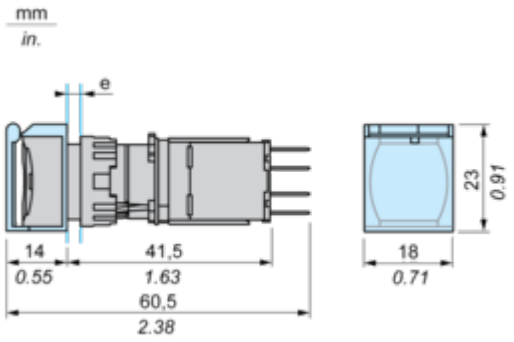

e panel thickness 1 to 6 mm/0.04 to 0.24 in.