Product data sheet

Specifications



Empty handy box for mobile use, Harmony XB5R, plastic, green, 1 cut out

ZBRM21

Product availability: Stock - Normally stocked in distribution facility

Main

Range of Product	Harmony XB5R
Product or Component Type	Empty handy box
Device short name	ZBRM
Product destination	For XB5R Ø 22 mm control units
Control station application	One function

Complementary

Colour of base of enclosure	Green Pantone 355C)
Colour of cover	Dark grey RAL 7016)
Material	Polycarbonate
Net Weight	0.24 lb(US) (0.11 kg)

Environment

Ambient Air Temperature for Storage	-40…158 °F (-40…70 °C)
Ambient Air Temperature for Operation	-13…131 °F (-25…55 °C)
IP degree of protection	IP65 IEC 60529
IK degree of protection	IK03 conforming to IEC 62262
Standards	CSA C22.2 No 14 ETSI EN 301 489-1 ETSI EN 300 440-2 ETSI EN 300 440-1 IEC 60947-5-1 ETSI EN 301 489-3 UL 508
Product Certifications	ANATEL BT 2006/95/EC CE FCC C-tick SRRC RSS GOST
Directives	2004/108/EC - electromagnetic compatibility 1999/5/EC - R&TTE directive

Ordering and shipping details

Category	US1000I22470
Discount Schedule	000I
GTIN	3606480673535

Price is “List Price” and may be subject to a trade discount – check with your local distributor or retailer for actual price.

Disclaimer: This documentation is not intended as a substitute for and is not to be used for determining suitability or reliability of these products for specific user applications

Returnability	Yes
Country of origin	HU

Packing Units

Unit Type of Package 1	PCE
Nbr. of units in pkg.	1
Package 1 Height	2.520 in (6.400 cm)
Package 1 Width	3.543 in (9.000 cm)
Package 1 Length	8.346 in (21.200 cm)
Package weight(Lbs)	4.903 oz (139.000 g)
Unit Type of Package 2	S03
Number of Units in Package 2	32
Package 2 Height	11.8 in (30 cm)
Package 2 Width	11.8 in (30 cm)
Package 2 Length	15.7 in (40 cm)
Package 2 Weight	10.983 lb(US) (4.982 kg)

Contractual warranty

Warranty (in months)	18

Environmental Data

Schneider Electric aims to achieve Net Zero status by 2050 through supply chain partnerships, lower impact materials, and circularity via our ongoing “Use Better, Use Longer, Use Again” campaign to extend product lifetimes and recyclability.

Environmental Data explained >

How we assess product sustainability >

Environmental footprint

Total lifecycle Carbon footprint	**32 kg CO2 eq.**
Carbon footprint of the manufacturing phase [A1 to A3]	**1 kg CO2 eq.**
Carbon footprint of the distribution phase [A4]	**0 kg CO2 eq.**
Carbon footprint of the installation phase [A5]	**0 kg CO2 eq.**
Carbon footprint of the use phase [B2, B3, B4, B6]	**31 kg CO2 eq.**
Carbon footprint of the end-of-life phase [C1 to C4]	**0.1 kg CO2 eq.**
Environmental Disclosure	**Product Environmental Profile**

Use Better

Materials and Substances

Packaging made with recycled cardboard	**No**
Packaging without single use plastic	**No**
SCIP Number	**25b7f895-3732-43c8-9910-ef6005058640**
EU RoHS Directive	**Compliant By Exemption**
REACh Regulation	**Reference contains Substances of Very High Concern above the threshold**
California proposition 65	**WARNING: This product can expose you to chemicals including: Nickel compounds, which is known to the State of California to cause cancer, and Di-isodecyl phthalate (DIDP), which is known to the State of California to cause birth defects or other reproductive harm. For more information go to www.P65Warnings.ca.gov**

Use Again

Repack and remanufacture

Recyclability potential, in %	**12**
Circularity Profile	**End of Life Information**
Take-back	**No**

Dimensions Drawings

Dimensions

Wireless and Batteryless Pushbutton

Plastic Mobile Box for Mobile or Fix Use - 1 Function

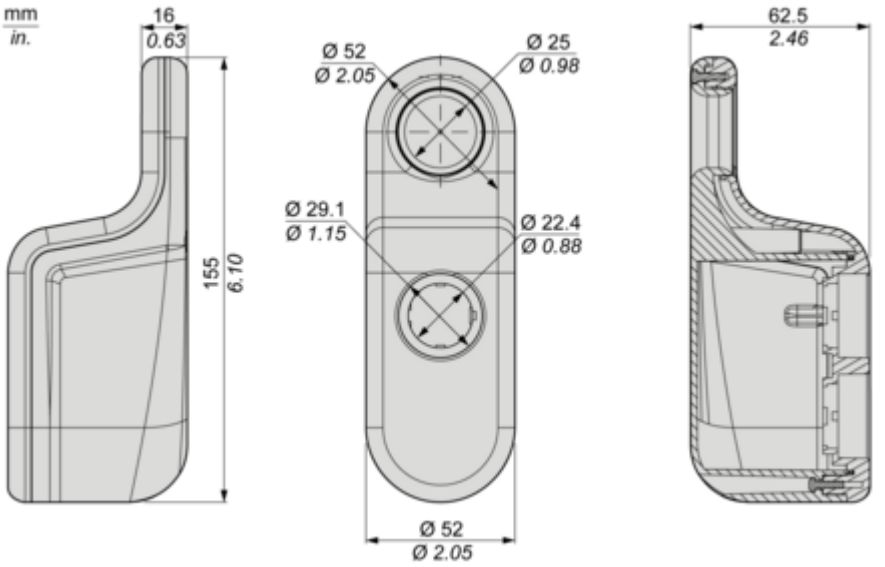

Image of product / Alternate images

Alternative











