Product data sheet

Specifications



Programmable receiver - 2 relays - 24..240 V AC/DC - 2 pusbuttons - 6 LEDs

ZBRRA

Product availability: Stock - Normally stocked in distribution facility

Main

Range of Product	Harmony XB5R
Product or Component Type	Programmable receiver
Device short name	ZBRRA
Product Specific Application	Interface to actuators
Function of module	Bi-stable Monostable Enable/disable
Reset time	1 s time delay
Transmission frequency	2405 MHz
Antenna type	Omnidirectional
Antenna gain	0 dBi

Complementary

Nominal output current	3 A
Output Type	2 relays
Output contacts	2 C/O
Input output isolation	Galvanic isolation
Time delay range	0.5 s +/- 15 %)
Switching capacity in VA	1250 VA
Maximum switching current	3 A AC/DC
Maximum switching voltage	250 V AC/DC
[Us] Rated Supply Voltage	24...240 V AC/DC 50/60 Hz +/- 10 %
Maximum sensing distance	328.08 ft (100 m) in free field 49.2 ft (15 m) transmitter in a plastic box type XAL D and receiver in a metal enclosure
Response Time	< 30 ms after transmitter clicks
Utilisation category	AC-15 : B300 DC-13 : R300
Maximum power consumption in W	3 W 240 V AC 2 W 24 V DC
Breaking capacity	750 VA
Control circuit frequency	50...60 Hz +/- 10 %
Short-circuit protection	0.5 A fuse fast blow
Operating position	Any position without derating

Price is “List Price” and may be subject to a trade discount – check with your local distributor or retailer for actual price.

Disclaimer: This documentation is not intended as a substitute for and is not to be used for determining suitability or reliability of these products for specific user applications

Electrical connection	1 conductor cable 0.0002…0.004 in² (0.14…2.5 mm²) - 26 AWG...14 AWG - solid - without cable end 2 conductors cable 0.0002…0.002 in² (0.14…1.5 mm²) - 26 AWG...16 AWG - solid - without cable end 1 conductor cable 0.0002…0.006 in² (0.14…4 mm²) - 26 AWG...12 AWG - flexible - with cable end 2 conductors cable 0.0002…0.002 in² (0.14…1.5 mm²) - 26 AWG...16 AWG - flexible - with cable end
Tightening torque	5.3 lbf.in (0.6 N.m)
Housing material	Polycarbonate
Status LED	1 LED Green power ON 2 LEDs Green relay ON 2 LEDs Green function mode 1 LED green and yellow radiofrequency reception signal
Mounting support	35 mm symmetrical DIN rail
Number of Channels	1
Width	1.4 in (36 mm)
Height	4.3 in (108 mm)
Depth	3.0 in (75 mm)
Net Weight	0.29 lb(US) (0.13 kg)

Environment

Standards	IEC 61010 IEC 61010-1 IEC 61010-2-201 UL 61010 UL 61010-1 UL 61010-2-201 EN 61010-1 EN 61010-2-201 CAN/CSA C22.2 No. 61010-1-12 IEC 60947-1 IEC 60068-2-6 IEC 60068-2-27 IEC 60529 IEC 60664-1 NF EN 61140 ETSI EN 301 489-1 ETSI EN 301 489-17 EN 55032 EN 55011 ETSI EN 300 328 IEEE 802.15.4 FCC CFR 47 part 15 class B
Product Certifications	CE UL CB UKCA FCC IC CCC Giteki
Ambient Air Temperature for Storage	-40…158 °F (-40…70 °C)
Relative humidity	5…90 %
Vibration resistance	+/- 7.5 mm (f= 5…8 Hz) 2 gn (f= 8…150 Hz)
Shock resistance	10 gn 16 ms) 6000 shocks
IP degree of protection	IP20
Pollution degree	2
Overvoltage category	II

Insulation resistance	> 500 MOhm 500 V DC
[Ui] rated insulation voltage	250 V
Mechanical durability	1000000 cycles

Ordering and shipping details

Category	US1000I22470
Discount Schedule	000I
GTIN	3606480334702
Returnability	Yes
Country of origin	ID

Packing Units

Unit Type of Package 1	PCE
Nbr. of units in pkg.	1
Package 1 Height	1.8 in (4.6 cm)
Package 1 Width	3.1 in (8 cm)
Package 1 Length	3.8 in (9.6 cm)
Package weight(Lbs)	4.9 oz (138 g)
Unit Type of Package 2	S03
Number of Units in Package 2	64
Package 2 Height	11.8 in (30 cm)
Package 2 Width	11.8 in (30 cm)
Package 2 Length	15.7 in (40 cm)
Package 2 Weight	20.898 lb(US) (9.479 kg)

Contractual warranty

Warranty (in months)	18

Environmental Data

Schneider Electric aims to achieve Net Zero status by 2050 through supply chain partnerships, lower impact materials, and circularity via our ongoing “Use Better, Use Longer, Use Again” campaign to extend product lifetimes and recyclability.

Environmental Data explained >

How we assess product sustainability >

Environmental footprint

Total lifecycle Carbon footprint	**32 kg CO2 eq.**
Carbon footprint of the manufacturing phase [A1 to A3]	**1 kg CO2 eq.**
Carbon footprint of the distribution phase [A4]	**0 kg CO2 eq.**
Carbon footprint of the installation phase [A5]	**0 kg CO2 eq.**
Carbon footprint of the use phase [B2, B3, B4, B6]	**31 kg CO2 eq.**
Carbon footprint of the end-of-life phase [C1 to C4]	**0.1 kg CO2 eq.**
Environmental Disclosure	**Product Environmental Profile**

Use Better

Materials and Substances

Packaging made with recycled cardboard	**No**
Packaging without single use plastic	**No**
SCIP Number	**25b7f895-3732-43c8-9910-ef6005058640**
EU RoHS Directive	**Compliant By Exemption**
REACh Regulation	**Reference contains Substances of Very High Concern above the threshold**
California proposition 65	**WARNING: This product can expose you to chemicals including: Lead and lead compounds, which is known to the State of California to cause cancer and birth defects or other reproductive harm. For more information go to www.P65Warnings.ca.gov**

Use Again

Repack and remanufacture

Recyclability potential, in %	**2**
Circularity Profile	**End of Life Information**
Take-back	**No**
WEEE Label	**The product must be disposed on European Union markets following specific waste collection and never end up in rubbish bins.**

Dimensions Drawings

Programmable Receiver

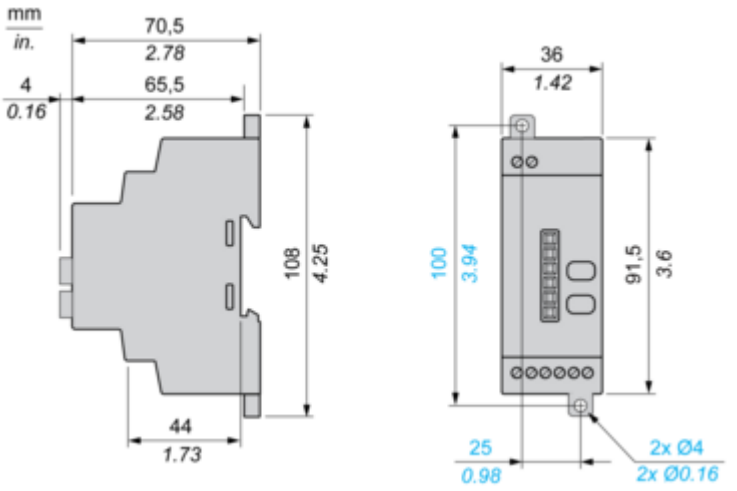

Mounting and Clearance

Receiver Clearance

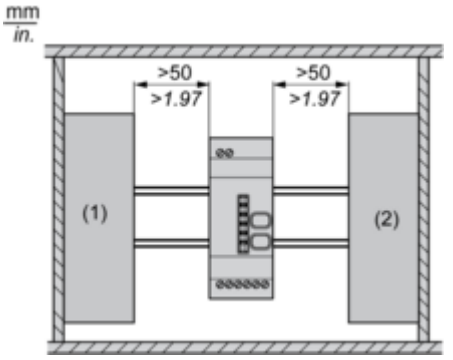

(1) Drive
(2) Power Supply or PLC

Receiver Mounting

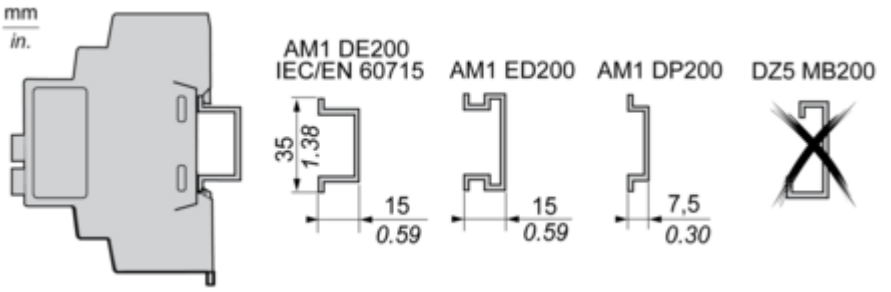

Connections and Schema

Programmable Receiver

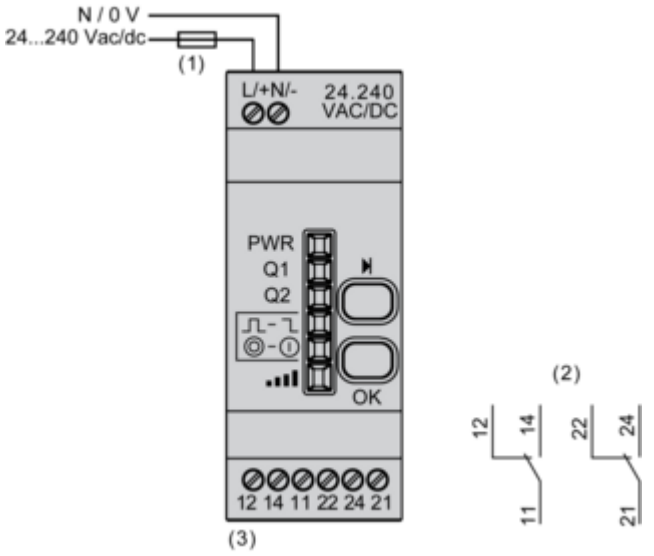

(1) 500 mA
(2) Output contacts
(3) Imax = 3 A

Image of product / Alternate images

Alternative



