# Product data sheet

Specifications



## Programmable receiver, Harmony XB5R, 4 PNP, 2 buttons, 6 indicating LEDs, monostable, 24V DC

ZBRRC

**Product availability: Stock - Normally stocked in distribution facility**

## Main

| | |
|---|---|
| **Range of Product** | Harmony XB5R |
| **Product or Component Type** | Programmable receiver |
| **Device short name** | ZBRRC |
| **Product Specific Application** | Interface to PLC |
| **Function of module** | Monostable |
| **Reset time** | 1 s time delay |
| **Transmission frequency** | 2405 MHz |
| **Antenna type** | Omnidirectional |
| **Antenna gain** | 0 dBi |

## Complementary

| | |
|---|---|
| **Output Type** | Transistor PNP |
| **Output contacts** | 4 PNP |
| **Time delay range** | 0.5 s +/- 15 %) |
| **Maximum switching current** | 0.2 A DC |
| **Minimum switching current** | 10 mA DC |
| **[Us] Rated Supply Voltage** | 24 V DC +/- 15 % |
| **Maximum voltage drop** | <2 V DC 0.2 A |
| **Maximum sensing distance** | 328.08 ft (100 m) in free field<br>49.2 ft (15 m) transmitter in a plastic box type XAL D and receiver in a metal enclosure |
| **Response Time** | < 30 ms after transmitter clicks |
| **Utilisation category** | DC-13 : R300 |
| **Maximum power consumption in W** | 20 W DC |
| **Breaking capacity** | 4.8 W per output) |
| **Short-circuit protection** | 0.5 A fuse fast blow |
| **Operating position** | Any position without derating |
| **Electrical connection** | 1 conductor cable 0.0002…0.004 in² (0.14…2.5 mm²) - 26 AWG...14 AWG - solid - without cable end<br>2 conductors cable 0.0002…0.002 in² (0.14…1.5 mm²) - 26 AWG...16 AWG - solid - without cable end<br>1 conductor cable 0.0002…0.006 in² (0.14…4 mm²) - 26 AWG...12 AWG - flexible - with cable end<br>2 conductors cable 0.0002…0.002 in² (0.14…1.5 mm²) - 26 AWG...16 AWG - flexible - with cable end |

Price is “List Price” and may be subject to a trade discount – check with your local distributor or retailer for actual price.

Disclaimer: This documentation is not intended as a substitute for and is not to be used for determining suitability or reliability of these products for specific user applications

| | |
|---|---|
| **Tightening torque** | 5.3 lbf.in (0.6 N.m) |
| **Housing material** | Polycarbonate |
| **Status LED** | 1 LED Green power ON<br>1 LED green and yellow radiofrequency reception signal<br>4 LEDs Green output active |
| **Mounting support** | 35 mm symmetrical DIN rail |
| **Width** | 1.4 in (36 mm) |
| **Height** | 4.3 in (108 mm) |
| **Depth** | 3.0 in (75 mm) |
| **Net Weight** | 0.29 lb(US) (0.13 kg) |

## Environment

| | |
|---|---|
| **Standards** | IEC 61010<br>IEC 61010-1<br>IEC 61010-2-201<br>UL 61010<br>UL 61010-1<br>UL 61010-2-201<br>EN 61010-1<br>EN 61010-2-201<br>CAN/CSA C22.2 No. 61010-1-12<br>IEC 60947-1<br>IEC 60068-2-6<br>IEC 60068-2-27<br>IEC 60529<br>IEC 60664-1<br>NF EN 61140<br>ETSI EN 301 489-1<br>ETSI EN 301 489-17<br>EN 55032<br>EN 55011<br>ETSI EN 300 328<br>IEEE 802.15.4<br>FCC CFR 47 part 15 class B |
| **Product Certifications** | CE<br>UL<br>CB<br>UKCA<br>FCC<br>IC<br>CCC<br>Giteki |
| **Ambient Air Temperature for Storage** | -40…158 °F (-40…70 °C) |
| **Relative humidity** | 5…90 % |
| **Vibration resistance** | +/- 7.5 mm (f= 5…8 Hz)<br>2 gn (f= 8…150 Hz) |
| **Shock resistance** | 10 gn 16 ms) 6000 shocks |
| **IP degree of protection** | IP20 |
| **Pollution degree** | 2 |
| **Overvoltage category** | II |
| **Insulation resistance** | > 500 MOhm 500 V DC |
| **[Ui] rated insulation voltage** | 60 V |

## Ordering and shipping details

| | |
|---|---|
| **Category** | US1000I22470 |
| **Discount Schedule** | 000I |

| | |
|---|---|
| **GTIN** | 3606480334719 |
| **Returnability** | Yes |
| **Country of origin** | ID |

## Packing Units

| | |
|---|---|
| **Unit Type of Package 1** | PCE |
| **Nbr. of units in pkg.** | 1 |
| **Package 1 Height** | 1.8 in (4.6 cm) |
| **Package 1 Width** | 3.1 in (7.9 cm) |
| **Package 1 Length** | 3.8 in (9.6 cm) |
| **Package weight(Lbs)** | 4.3 oz (122.0 g) |
| **Unit Type of Package 2** | S03 |
| **Number of Units in Package 2** | 64 |
| **Package 2 Height** | 11.8 in (30.0 cm) |
| **Package 2 Width** | 11.8 in (30.0 cm) |
| **Package 2 Length** | 15.7 in (40.0 cm) |
| **Package 2 Weight** | 18.735 lb(US) (8.498 kg) |

## Contractual warranty

| | |
|---|---|
| **Warranty (in months)** | 18 |

## Environmental Data

Schneider Electric aims to achieve Net Zero status by 2050 through supply chain partnerships, lower impact materials, and circularity via our ongoing “Use Better, Use Longer, Use Again” campaign to extend product lifetimes and recyclability.

Environmental Data explained >

How we assess product sustainability >

### Environmental footprint

| | |
|---|---|
| Total lifecycle Carbon footprint | **32 kg CO2 eq.** |
| Carbon footprint of the manufacturing phase [A1 to A3] | **1 kg CO2 eq.** |
| Carbon footprint of the distribution phase [A4] | **0 kg CO2 eq.** |
| Carbon footprint of the installation phase [A5] | **0 kg CO2 eq.** |
| Carbon footprint of the use phase [B2, B3, B4, B6] | **31 kg CO2 eq.** |
| Carbon footprint of the end-of-life phase [C1 to C4] | **0.1 kg CO2 eq.** |
| Environmental Disclosure | Product Environmental Profile |

## Use Better

### Materials and Substances

| | |
|---|---|
| Packaging made with recycled cardboard | **No** |
| Packaging without single use plastic | **No** |
| SCIP Number | **25b7f895-3732-43c8-9910-ef6005058640** |
| EU RoHS Directive | Compliant By Exemption |
| REACh Regulation | Reference contains Substances of Very High Concern above the threshold |
| California proposition 65 | **WARNING: This product can expose you to chemicals including: Nickel compounds, which is known to the State of California to cause cancer, and Di-isodecyl phthalate (DIDP), which is known to the State of California to cause birth defects or other reproductive harm. For more information go to www.P65Warnings.ca.gov** |

## Use Again

### Repack and remanufacture

| | |
|---|---|
| Recyclability potential, in % | **2** |
| Circularity Profile | End of Life Information |
| Take-back | **No** |
| WEEE Label | **The product must be disposed on European Union markets following specific waste collection and never end up in rubbish bins.** |

Dimensions Drawings

**Programmable Receiver**

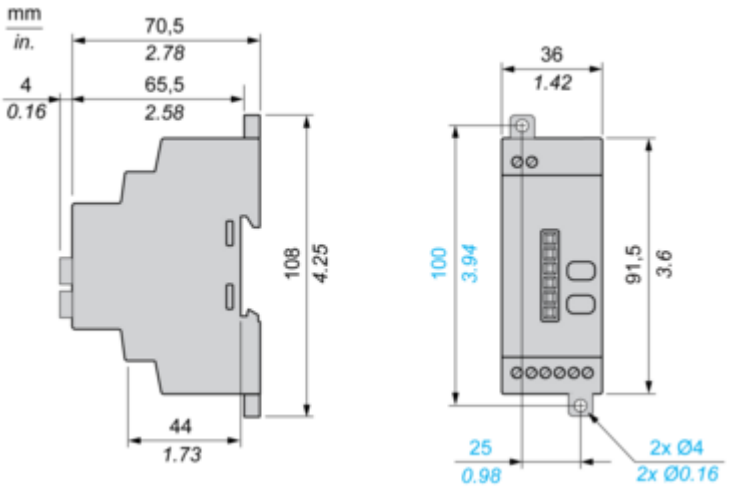

Mounting and Clearance

## Receiver Clearance

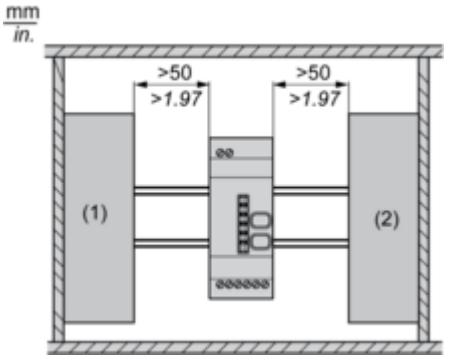


**(1)** Drive
**(2)** Power Supply or PLC

## Receiver Mounting

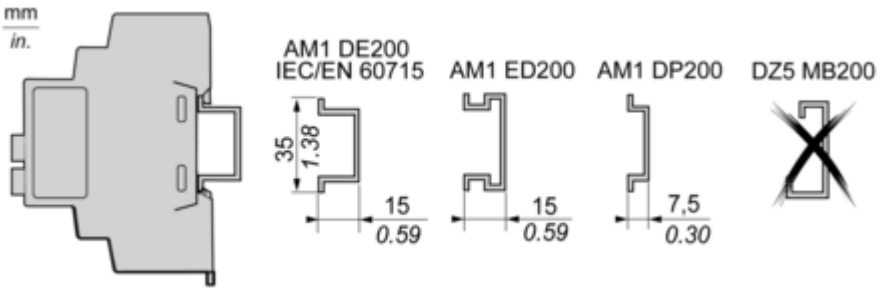

Connections and Schema

## Programmable Receiver

### Wiring Diagram

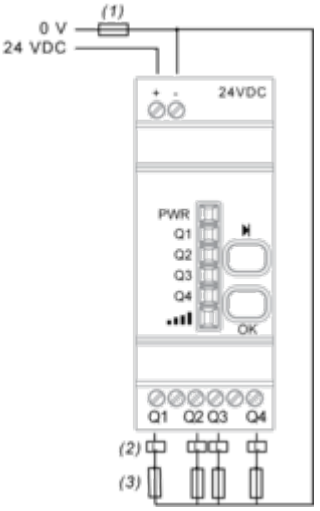


**(1)** 400 mA fast-blow fuse
**(2)** Imax = 200 mA
**(3)** Imax = 300 mA

Image of product / Alternate images

**Alternative**




