Product data sheet

Specifications



Protection cover, Harmony XB5, plastic, black, for RJ45 and USB ports

ZBSP1

Discontinued on: May 31, 2026

Discontinued

Product availability: Stock - Normally stocked in distribution facility

Main

Range of Product	Harmony XB5
Sale per indivisible quantity	10

Complementary

Panel Thickness with accessory	0.06…0.2 in (1.5…5 mm)
Product or Component Type	Protection cover
Material	Plastic
Accessory / separate part category	Protection accessories
Product compatibility	Panel mounted RJ45 port XB5P Panel mounted USB port XB5P
IP degree of protection	IP65 conforming to IEC 60529 IP67 conforming to IEC 60529
Color	Black

Ordering and shipping details

Category	US10CS200028
Discount Schedule	0CS2
GTIN	3606481194220
Returnability	Yes

Packing Units

Unit Type of Package 1	PCE
Nbr. of units in pkg.	1
Package 1 Height	0.591 in (1.500 cm)
Package 1 Width	3.150 in (8.000 cm)
Package 1 Length	1.280 in (3.250 cm)
Package weight(Lbs)	0.071 oz (2.000 g)
Unit Type of Package 2	BB1
Number of Units in Package 2	10
Package 2 Height	0.591 in (1.500 cm)
Package 2 Width	3.150 in (8.000 cm)

Price is “List Price” and may be subject to a trade discount – check with your local distributor or retailer for actual price.

Disclaimer: This documentation is not intended as a substitute for and is not to be used for determining suitability or reliability of these products for specific user applications

Package 2 Length	5.118 in (13.000 cm)
Package 2 Weight	0.952 oz (27.000 g)
Unit Type of Package 3	S02
Number of Units in Package 3	300
Package 3 Height	5.906 in (15.000 cm)
Package 3 Width	11.811 in (30.000 cm)
Package 3 Length	15.748 in (40.000 cm)
Package 3 Weight	2.540 lb(US) (1.152 kg)

Contractual warranty

Warranty (in months)	18

Environmental Data

Schneider Electric aims to achieve Net Zero status by 2050 through supply chain partnerships, lower impact materials, and circularity via our ongoing “Use Better, Use Longer, Use Again” campaign to extend product lifetimes and recyclability.

Environmental Data explained >

How we assess product sustainability >

Environmental footprint

Total lifecycle Carbon footprint	**0 kg CO2 eq.**
Carbon footprint of the manufacturing phase [A1 to A3]	**0 kg CO2 eq.**
Carbon footprint of the distribution phase [A4]	**0 kg CO2 eq.**
Carbon footprint of the installation phase [A5]	**0 kg CO2 eq.**
Carbon footprint of the use phase [B2, B3, B4, B6]	**0 kg CO2 eq.**
Carbon footprint of the end-of-life phase [C1 to C4]	**0 kg CO2 eq.**

Use Better

Materials and Substances

Packaging made with recycled cardboard	**Yes**
Packaging without single use plastic	**No**
EU RoHS Directive	**Compliant**
REACh Regulation	**Free of Substances of Very High Concern above the threshold**
California proposition 65	**WARNING: This product can expose you to chemicals including: Lead and lead compounds, which is known to the State of California to cause cancer and birth defects or other reproductive harm. For more information go to www.P65Warnings.ca.gov**

Use Again

Repack and remanufacture

Recyclability potential, in %	**0**
Take-back	**No**

Dimensions Drawings

Dimensions

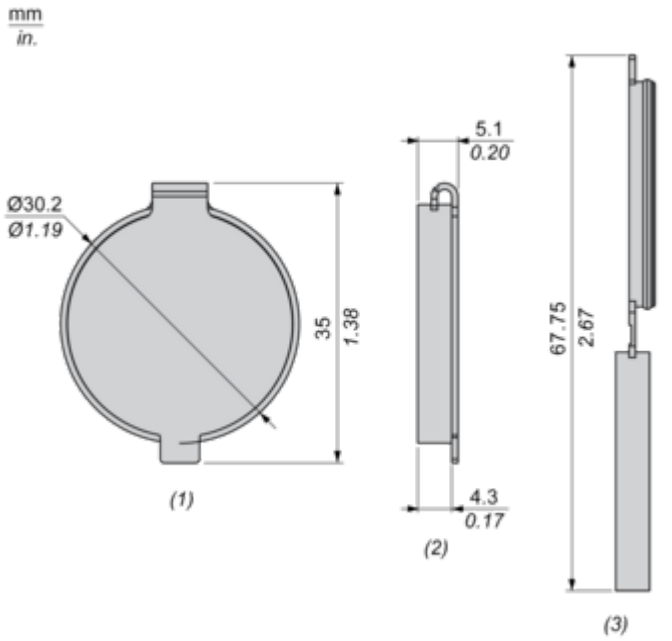

(1) Front view
(2) Side view - Closed
(3) Side view - Open

Mounting and Clearance

Panel Cut-out for Protective Cover (Finished Holes, Ready for Installation)

Connection by Screw Clamp Terminals or Plug-in Connectors

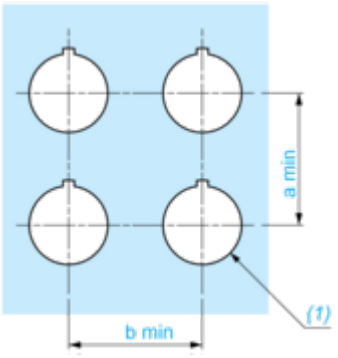

(1) Diameter on finished panel or support

Connections	a in mm	a in in.	b in mm	b in in.
By screw clamp terminals or plug-in connector	40	1.57	40	1.57

Image of product / Alternate images

Alternative





