# Installation Guide

## "Multi-Sense" Model MRX Series

## Multi-Range Differential Pressure Transducer




## MECHANICAL INSTALLATION

### Mounting Position

Mount and calibrate in vertical position for quick and easy installation on ducts, walls or ceilings and in control rooms.

### Media Compatibility

Model MRX transducers are designed to be used with air or nonconducting gases. Use with liquids or corrosive gases will damage the unit.

### Environment

The operating temperature limits of the MRX are as follows:

| | |
|---|---|
| Operating Temperature | 32°F to 122°F (0°C to 50°C) |
| Compensated Temperature Range | 32°F to 122°F (0°C to 50°C) |

## SIMPLE 5-STEP SETUP INSTRUCTIONS -

## STEP 1

***For CE compliance a properly grounded shielding cable is required.***

## ELECTRICAL CONNECTIONS

### Removable Terminal Block for Easy Wiring

**STEP 1:** Wire and Power Up Unit - Follow diagrams below for 2-wire and 3-wire configurations. After completing wiring requirements - Apply power to the Model MRX.

Multi-Sense Voltage
3-Wire, 0-5, 0-10 VDC Configuration

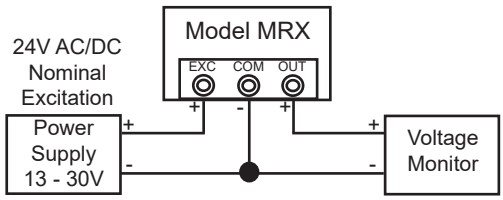


Multi-Sense Current
2-Wire, 4-20 mA Configuration

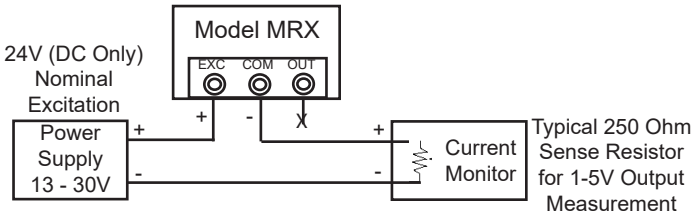


## GENERAL INFORMATION

Every Model MRX has been calibrated and tested before shipment to guarantee performance for all pressure ranges. The Model MRX is available in four versions (see below) which have field selectable range capability via slide switch and jumpers.

## MULTI-SENSE RANGE SPECIFICATIONS

| | Range | UNI Range | BI Range |
|---|---|---|---|
| MR1 | A | 1.0"WC | ±1.0"WC |
| | B | 0.5"WC | ±0.5"WC |
| | C | 0.25"WC | ±0.25"WC |
| | D | 0.1"WC | ±0.1"WC |

| | Range | UNI Range | BI Range |
|---|---|---|---|
| MR2 | A | 10.0"WC | ±10.0"WC |
| | B | 5.0"WC | ±5.0"WC |
| | C | 2.5"WC | ±2.5"WC |
| | D | 1.0"WC | ±1.0"WC |

| MRG | Range | UNI Range | BI Range |
|---|---|---|---|
| | A | 5.0"WC | ±5.0"WC |
| | B | 2.5"WC | ±2.5"WC |
| | C | 1.0"WC | ±1.0"WC |
| | D | 0.5"WC | ±0.5"WC |
| | E | 1000 Pa | ±1000 Pa |
| | F | 500 Pa | ±500 Pa |
| | G | 250 Pa | ±250 Pa |
| | H | 100 Pa | ±100 Pa |

| MRC | Range | UNI Range | BI Range |
|---|---|---|---|
| | A | 0.25"WC | ±.0.25"WC |
| | B | 0.1"WC | ±0.1"WC |
| | E | 50 Pa | ±50 Pa |
| | F | 25 Pa | ±25 Pa |

## SIMPLE 5-STEP SETUP INSTRUCTIONS - STEPS 2 - 5

### Power On - LCD Display

Display momentarily toggles thru all existing setup parameters on initial power up. Pressure is normally indicated on display. Units are either in inches of water column or Pascal.

***STEP 2: Select Pressure Range:** Set appropriate full scale range using the Slide Switch Multiplier and JMP4 jumper. A-D is "W.C.. E-H is Pa. LCD will momentarily indicate selected range.
** To select E-H position also move JMP to Pa position.*

**STEP 3:** Select Unidirectional or Bi-directional mode.

****STEP 4:** Select Current (mA) or Voltage 0-5, or 0-10 VDC output range.
*** Step 4 be sure to set mA/volt switch to volt position if using 0 to 5 or 0 to 10V outputs*

**STEP 5: Push Button:** To Auto Zero - See Zero and Span Adjustment on page 2.

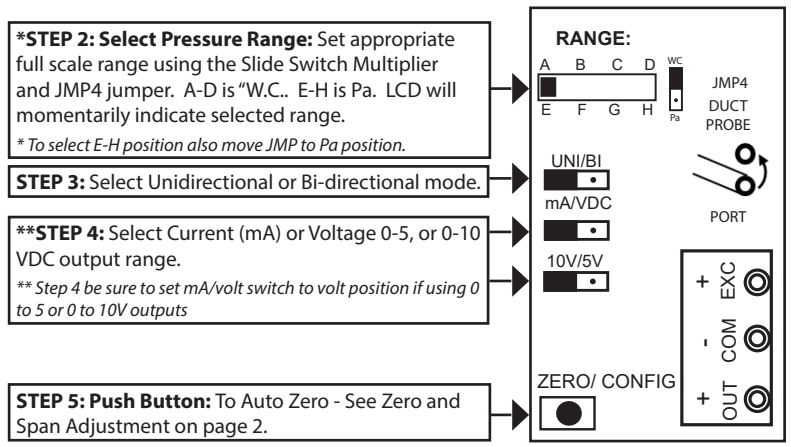


## STEP 6 (OPTIONAL CONFIGURATION)

Press and hold zero/config button, you will see the "0". Hold down for 7 seconds until seeing "Conf" screen. Release push button and screen will read "Filt". Hold down push button until "Filt" flashes. "Filt" is a sampling filter with 3 options: "Nor" (normal), "SLo" (slow), "FAS" (fast) and "off" (no filter). Cycle through options by pressing zero/config button. To select press and hold until screen flashes. After selecting filter, screen will show "filt", cycle through options and choose "done". Press until it flashes. The sampling filter increases the sample size before updating the output and the display. For "noisy" pressure environments increase the sample size to slow setting. For faster updates change setting to fast or off. Default setting is normal.

| Setting | Response Time (sec) |
|---|---|
| Off | 0.3 |
| Fast | 1.5 |
| Normal | 3 |
| Slow | 6 |

## ZERO AND SPAN ADJUSTMENT*

The unit may be recalibrated in the field using the push button zero/span. It may be calibrated in any of the pressure ranges.

### Zero Adjustment:

1. With unit at zero differential pressure, press and hold ZERO/CONFIG button until the "-0-" display blinking.
2. Release the button immediately. The display will show "----" briefly to re-zero the unit.
3. If the re-zero is successful, the display will show "good". The new zero value will be stored in nonvolatile memory automatically.
4. If the re-zero is unsuccessful, the display will show "bAd". This is usually because the re-zeroring pressure is more than ±10% of the sensor range with factory setting.

### Span Adjustment:

1. It is recommended to perform Zero Adjustment before Span Adjustment
2. Use a reference grade calibrator to apply positive full-scale differential pressure.
3. Press and hold ZERO/CONFIG button until the display shows "-0-" and the display stops blinking and shows "Conf".
4. Release the button to get into the Configuration menu. The first selection is "FiLt" (Filter) setting.
5. Do short press (press and not hold) until the display shows "-SP-" (Set Span) setting.
6. Do long press (press and hold) until the display is blinking to select it. The display will show "yes".
7. Do long press until the display is blinking and then release the button. The display will show "---" briefly to re-span the unit.
8. If the re-span is successful, the display will show "good". The new span value will be stored in nonvolatile memory automatically.
9. If the re-span is unsuccessful, the display will show "bAd". This is usually because the re-zeroring pressure is more than ±10% off of the sensor range factory setting.

## PERFORMANCE SPECIFICATIONS

Accuracy RSS* (at constant temperature.) ±1% FS
*RSS of Non-Linearity, Non-Repeatability and Hysteresis.

| Thermal Effects | |
|---|---|
| Compensated Range °F(°C) | +32 to +122°F (0 to 50) |
| Zero/Span Shift %FS/°F(°C) | 0.03 (0.054) |
| Maximum Line Pressure | 10 PSI |
| Warm-up Shift | ±0.2% FS total |

| Position Effects (Unit is factory calibrated at 0g effect in the vertical position) | |
|---|---|
| Zero Offset (%FS/G) | 0.2% |

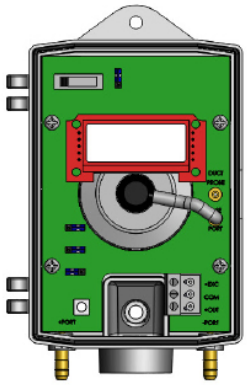

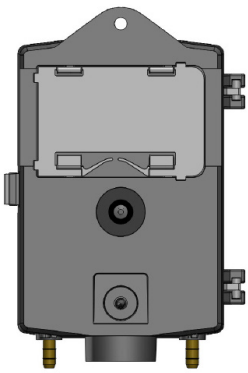

## RETURNING PRODUCTS FOR REPAIR

Please contact a Setra application engineer (800-257-3872, 978-263-1400) before returning unit for repair to review information relative to your application. Many times only minor field adjustments may be necessary. When returning a product to Setra, the material should be carefully packaged and shipped prepaid to:

**Setra Systems, Inc.**
**159 Swanson Road**
**Boxborough, MA**
**01719-1304**
**Attn: Repair Department**

***To download return form, please visit ecatalog.setra.com/returns.*** To assure prompt handling, please supply the following information and include it inside the package or returned material:

1. Name and phone number of person to contact.
2. Shipping and billing instructions.
3. Full description of the malfunction.
4. Identify any hazardous material used with product.

Allow approximately 3 weeks after receipt at Setra for the repair and return of the unit. Non-warranty repairs will not be made without customer approval and a purchase order to cover repair charges.

### Calibration Services

Setra maintains a complete calibration facility that is traceable to the National Institute of Standards & Technology (NIST). If you would like to recalibrate or recertify your Setra pressure transducers or transmitters, please call our Repair Department at 800-257-3872 (978-263-1400) for scheduling.

## WARRANTY AND LIMITATION OF LIABILITY

SETRA warrants its Model MRX Transducer products to the original consumer purchaser against defects for a period of one year from the date of sale by SETRA, as shown in its shipping documents. Without charge, SETRA will repair or replace products found to have manufacturing defects within the warranty period. The serial number or date code must not have been removed, defaced or otherwise changed. SETRA must be notified in advance of any returns; any products returned to SETRA must be transportation prepaid. The foregoing warranty is in lieu of all warranties, express, implied or statutory, including but not limited to, any implied warranty of merchantability for a particular purpose. SETRA's liability for breach of warranty is limited to repair or replacement, or if the goods cannot be repaired or replaced, to a refund of the purchase price. SETRA's liability for all other breaches is limited to a refund of the purchase price. In no instance shall SETRA be liable for incidental or consequential damages arising from a breach of warranty, or from the use or installation of its products. No representative or person is authorized to give any warranty other than as set out above or to assume for SETRA any other liability in connection with the sale of its products.

For all CE technical questions, contact Setra Systems, USA. EU customers may contact our EU representative Hengstler GmbH, Uhlandstr. 49, 78554 Aldingen, Germany (Tel: +49-7424-890, Fax: +49-7424-89500).