SCC Inc.

Technical Instructions

Document No. SEN-1000

November 9, 2022

QAx… Series

QAC… QAE… QAM… 544…
Temperature Sensors



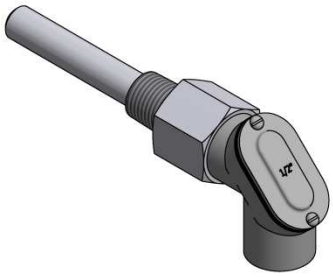



Description

QAx… and 544… temperature sensors are resistance temperature detectors (RTDs). RTDs work on the principle that the resistance of the sensing element changes as a direct function of the temperature.

Features

- Accurate and reliable indication of temperature
- Easy installation requiring no special tools
- Suitable for media -58 °F to 900 °F depending on model

Application

QAx… and 544… sensors are used to measure water, steam, air, exhaust, or FGR temperature. A variety of sensors are available to meet the needs of different applications. QAx… and 544… temperature sensors are capable of reliably measuring temperatures as low as -58 °F or as high as 900 °F.

Specifications

QAE2012.001

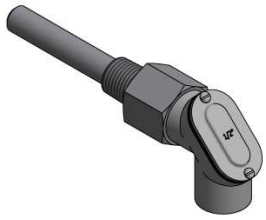

Sensing element	Platinum, 1000 Ohm, 2-wire
Characteristic	385 (see Appendix A, page 12)
Operating temperature	-4 to 374 °F [-20 to 190 °C]
Accuracy	See Appendix A, page 14
Process connection	1/2” NPT on thermowell
Thermowell	2.5” insertion, stainless steel
Weather head	Aluminum, 1/2” NPT
Primary use	Water / ambient air temperature sensor for LMV5x / RWF40 / RWF50 / RWF55

QAE2020.001

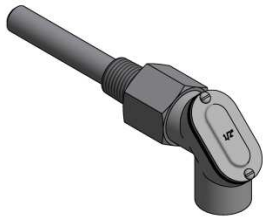

Sensing element	Platinum, 100 Ohm, 3-wire
Characteristic	385 (see Appendix A, page 12)
Operating temperature	-4 to 374 °F [-20 to 190 °C]
Accuracy	See Appendix A, page 14
Process connection	1/2” NPT on thermowell
Thermowell	2.5” insertion, stainless steel
Weather head	Aluminum, 1/2” NPT
Primary use	Water temperature sensor for LMV5x / RWF10 / RWF40 / RWF50 / RWF55

QAE2020.005



Sensing element	Nickel, 1000 Ohm, 2-wire
Characteristic	LG (see Appendix A, page 13)
Operating temperature	-13 to 266 °F [-25 to 130 °C]
Accuracy	See Appendix A, page 14
Process connection	1/2” NPT on thermowell
Thermowell	2.5” insertion, stainless steel
Weather head	Aluminum, 1/2” NPT
Primary use	Water / ambient air temperature sensor for LMV5x / RWF40 / RWF55

Specifications (continued)

QAE2020.010



Sensing element	Nickel, 1000 Ohm, 2-wire
Characteristic	LG (see Appendix A, page 13)
Operating temperature	-13 to 266 °F [-25 to 130 °C]
Accuracy	See Appendix A, page 14
Process connection	1/2” NPT on thermowell
Thermowell	4” insertion, stainless steel
Weather head	Aluminum, 1/2” NPT
Primary use	Water / ambient air temperature sensor for LMV5x / RWF40 / RWF55

QAE2020.015



Sensing element	Nickel, 1000 Ohm, 2-wire
Characteristic	LG (see Appendix A, page 13)
Operating temperature	-13 to 266 °F [-25 to 130 °C]
Accuracy	See Appendix A, page 14
Process connection	1/2” NPT on thermowell
Thermowell	6” insertion, stainless steel
Weather head	Aluminum, 1/2” NPT
Primary use	Water / ambient air temperature sensor for LMV5x / RWF40 / RWF55

544-577-25

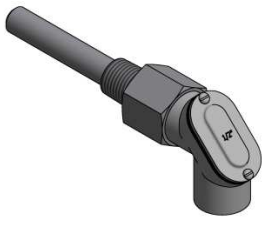

Sensing element	Platinum, 1000 Ohm, 2-wire
Characteristic	385 (see Appendix A, page 12)
Operating temperature	-40 to 240 °F [-40 to 116 °C]
Accuracy	See Appendix A, page 14
Process connection	1/2” NPT on thermowell
Thermowell	2.5” insertion, stainless steel
Weather head	Aluminum, 1/2” NPT
Primary use	Water / ambient air temperature sensor for LMV5x / RWF40 / RWF55

Specifications (continued)

544-577-40



Sensing element	Platinum, 1000 Ohm, 2-wire
Characteristic	385 (see Appendix A, page 12)
Operating temperature	-40 to 240 °F [-40 to 116 °C]
Accuracy	See Appendix A, page 14
Process connection	1/2” NPT on thermowell
Thermowell	4” insertion, stainless steel
Weather head	Aluminum, 1/2” NPT
Primary use	Water / ambient air temperature sensor for LMV5x / RWF40 / RWF55

544-577-60



Sensing element	Platinum, 1000 Ohm, 2-wire
Characteristic	385 (see Appendix A, page 12)
Operating temperature	-40 to 240 °F [-40 to 116 °C]
Accuracy	See Appendix A, page 14
Process connection	1/2” NPT on thermowell
Thermowell	6” insertion, stainless steel
Weather head	Aluminum, 1/2” NPT
Primary use	Water / ambient air temperature sensor for LMV5x / RWF40 / RWF55

QAE2012.903



Sensing element	Platinum, 100 Ohm, 3-wire
Characteristic	385 (see Appendix A, page 12)
Operating temperature	-58 to 900 °F [-50 to 482 °C]
Accuracy	See Appendix A, page 14
Process connection	1/2” NPT on thermowell
Thermowell	4” insertion, stainless steel
Weather head	Aluminum, 3/4” NPT
Primary use	Water / steam temperature sensor for LMV5x / RWF10 / RWF40 / RWF50 / RWF55
Accessories	**QAE-AC-903P:** 0-900° to 4-20 mA transmitter

Specifications (continued)

QAE2012.9002



Sensing element	Platinum, 1000 Ohm, 2-wire
Characteristic	385 (see Appendix A, page 12)
Operating temperature	-58 to 900 °F [-50 to 482 °C]
Accuracy	See Appendix A, page 14
Process connection	1/2” NPT on thermowell
Thermowell	4” insertion, stainless steel
Weather head	Aluminum, 3/4” NPT
Primary use	Water / steam temperature sensor for LMV5x / RWF10 / RWF40 / RWF50 / RWF55
Accessories	**QAM-AC-210:** 0-480° to 4-20 mA transmitter

QAC22



Sensing element	Nickel, 1000 Ohm, 2-wire
Characteristic	LG (see Appendix A, page 13)
Operating temperature	-58 to 158 °F [-50 to 70 °C]
Accuracy	See Appendix A, page 14
Process connection	None
Thermowell	None
Weather head	Integral, hole for M16 connection
Primary use	Ambient air temperature sensor for LMV52 / RWF40 / RWF55

QAM-P206



Sensing element	Platinum, 1000 Ohm, 2-wire
Characteristic	385 (see Appendix A, page 12)
Operating temperature	-58 to 900 °F [-50 to 482 °C]
Accuracy	See Appendix A, page 14
Probe	1/4” diameter, 6” long, stainless steel
Process connection	1/2” NPT
Thermowell	None
Weather head	Aluminum, 3/4” NPT
Primary use	Stack or FGR temperature sensor for LMV52
Accessories	**QAM-AC-210:** 0-480° to 4-20 mA transmitter

Specifications (continued)

QAM-P210



Sensing element	Platinum, 1000 Ohm, 2-wire
Characteristic	385 (see Appendix A, page 12)
Operating temperature	-58 to 900 °F [-50 to 482 °C]
Accuracy	See Appendix A, page 14
Probe	1/4” diameter, 10” long, stainless steel
Process connection	1/2” NPT
Thermowell	None
Weather head	Aluminum, 3/4” NPT
Primary use	Stack temperature sensor for LMV52
Accessories	**QAM-AC-210:** 0-480° to 4-20 mA transmitter

QAM-P310



Sensing element	Platinum, 100 Ohm, 3-wire
Characteristic	385 (see Appendix A, page 12)
Operating temperature	-58 to 900 °F [-50 to 482 °C]
Accuracy	See Appendix A, page 14
Probe	1/4” diameter, 10” long, stainless steel
Process connection	1/2” NPT
Thermowell	None
Weather head	Aluminum, 3/4” NPT
Primary use	Stack temperature sensor for LMV52
Accessories	**QAE-AC-903P:** 0-900° to 4-20 mA transmitter

QAM-P224



Sensing element	Platinum, 1000 Ohm, 2-wire
Characteristic	385 (see Appendix A, page 12)
Operating temperature	-58 to 900 °F [-50 to 482 °C]
Accuracy	See Appendix A, page 14
Probe	1/4” diameter, 24” long, stainless steel
Process connection	1/2” NPT
Thermowell	None
Weather head	Aluminum, 3/4” NPT
Primary use	Stack or FGR temperature sensor for LMV52
Accessories	**QAM-AC-210:** 0-480° to 4-20 mA transmitter

Wiring

QAE2012.001, QAE2020.005, QAE2020.010, QAE2020.015, 544-577-25, 544-577-40, 544-577-60



QAE2012.9002, QAM-P206, QAM-P210, QAM-P224

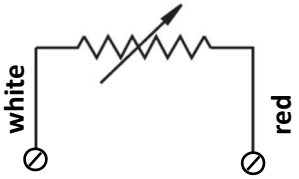

QAC22

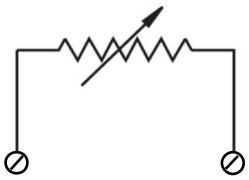

QAE2020.001

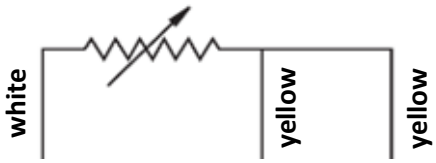

QAE2012.903, QAM-P310

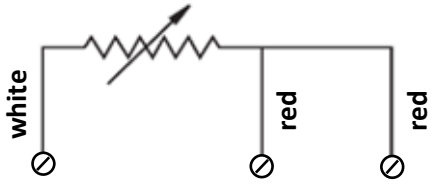

G1+	M1	I1	RWF40… water / steam
3	4	5	RWF10… water / steam
11	12	14	RWF55… water / steam
11	12	13	RWF50… water / steam
X60.1	X60.2	X60.4	LMV5x… water / steam

G1+	M1	RWF40… water / steam
B9	M9	RWF40… ambient air
11	14	RWF55… water / steam
31	32	RWF55… ambient air
11	13	RWF50… water / steam
X60.3	X60.4	LMV5x… water / steam
X86.1	X86.2	LMV52… exhaust
X87.1	X87.2	LMV52… ambient air

Note: There is no polarity when wiring a 2-wire RTD.

Wiring (continued)

QAM-AC-210: Platinum, 1000 Ohm, 2-wire temperature transmitter

Sensor connection

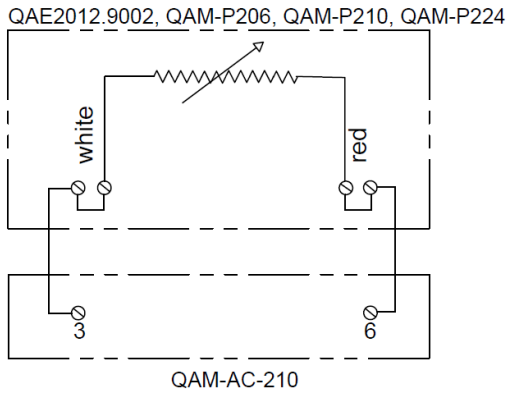

Power supply and current output

⌀ 2 (-)

(4 to 20 mA)
(8 to 30V dc)

⌀ 1 (+)

QAE-AC-903P: Platinum, 100 Ohm, 3-wire temperature transmitter

Sensor connection

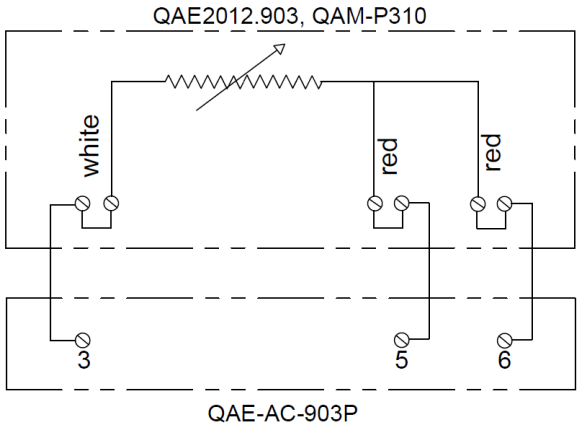

Power supply and current output

⌀ 2 (-)

(4 to 20 mA)
(8 to 30V dc)

⌀ 1 (+)

Dimensions

Dimensions in inches; millimeters in brackets

QAE2012.001, QAE2020.001, QAE2020.005, 544-577-25

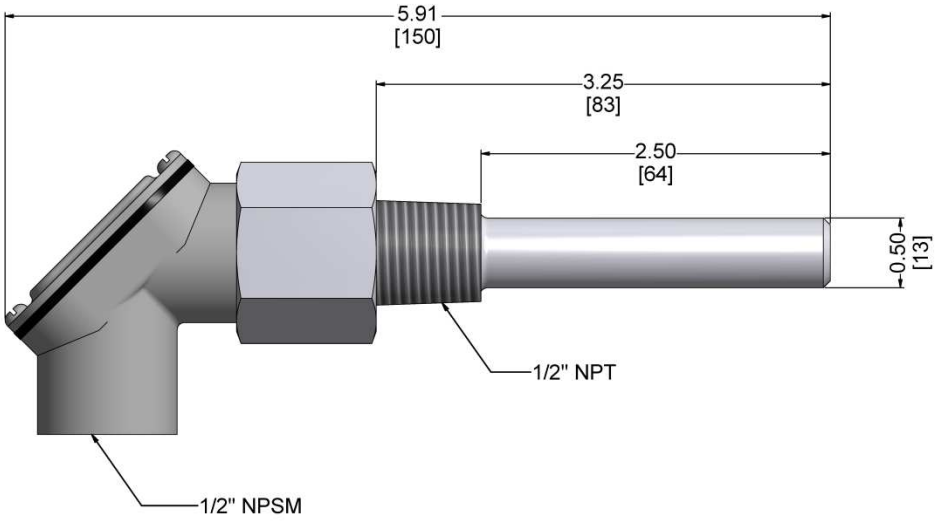

QAE2020.010, 544-577-40

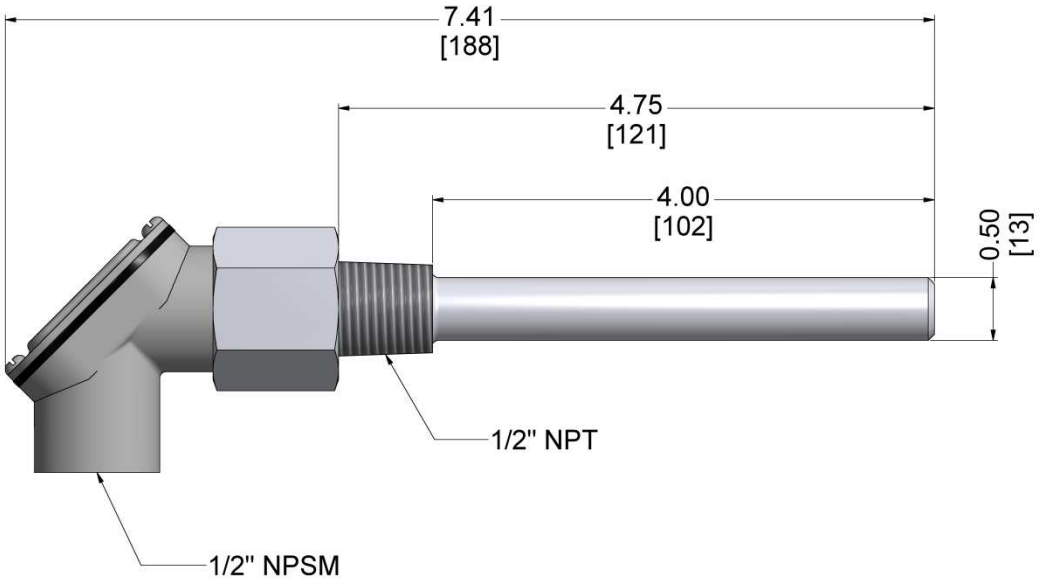

Dimensions (continued)

Dimensions in inches; millimeters in brackets

QAE2020.015, 544-577-60

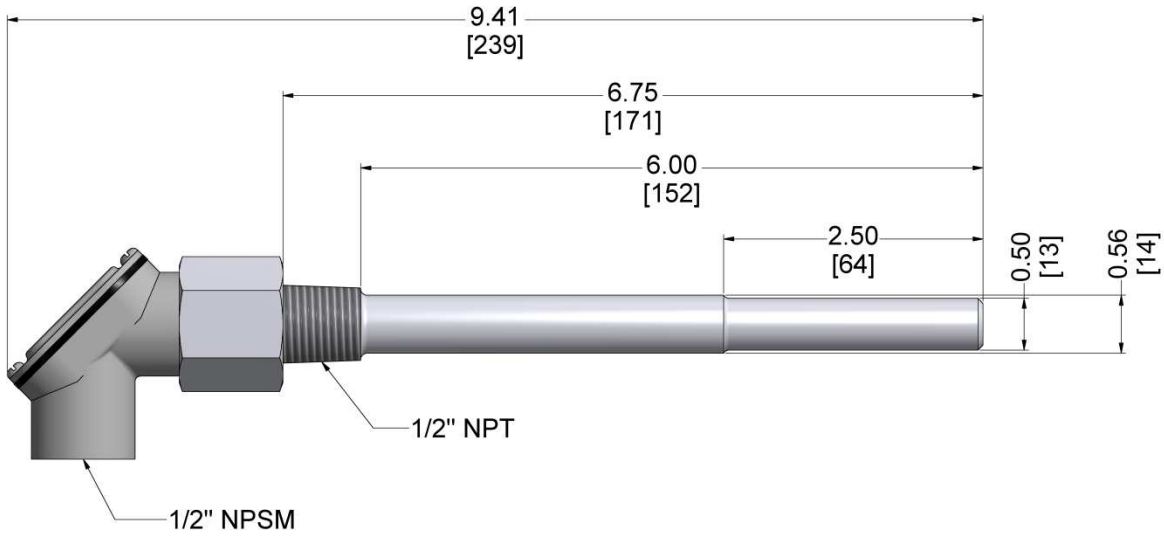

QAE2012.903, QAE2012.9002

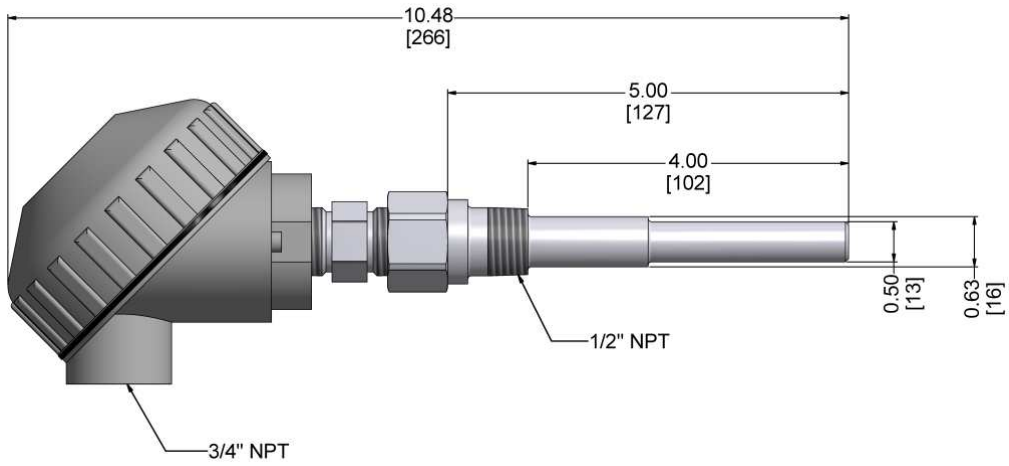

Dimensions (continued)

Dimensions in inches; millimeters in brackets

QAC22

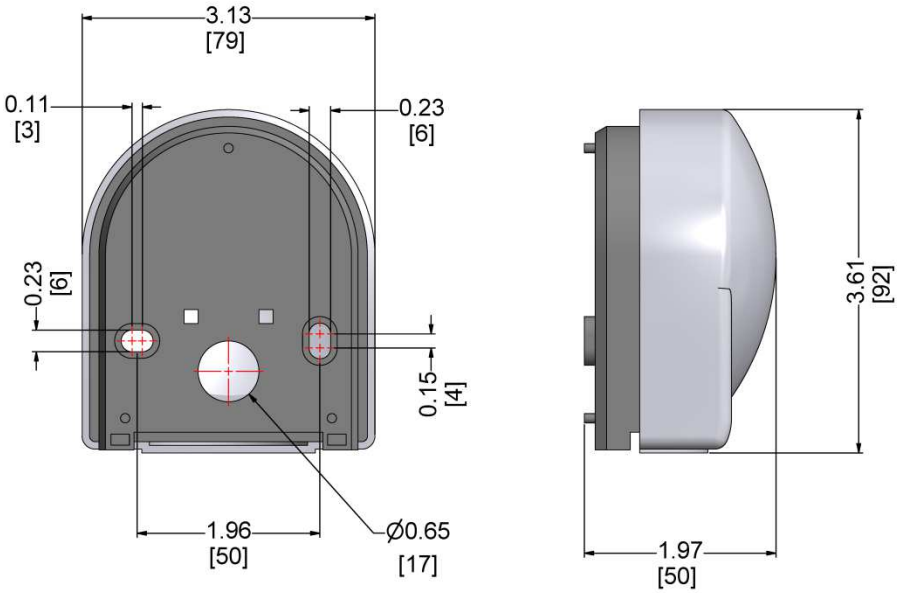

QAM-P206

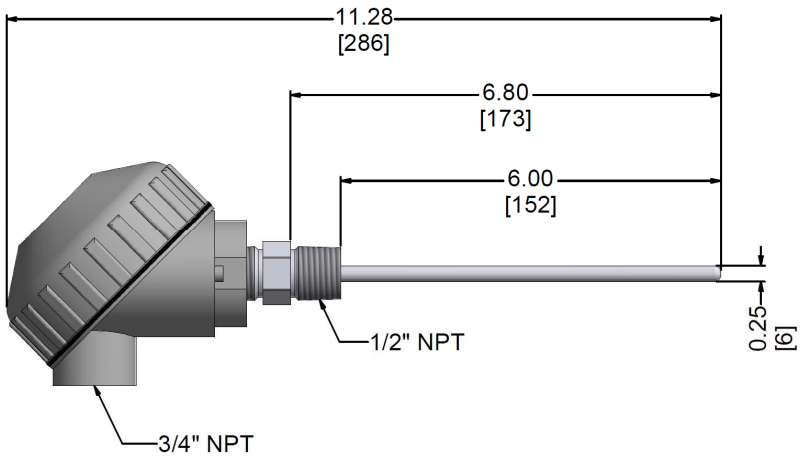

Dimensions (continued)

QAM-P210, QAM-P310

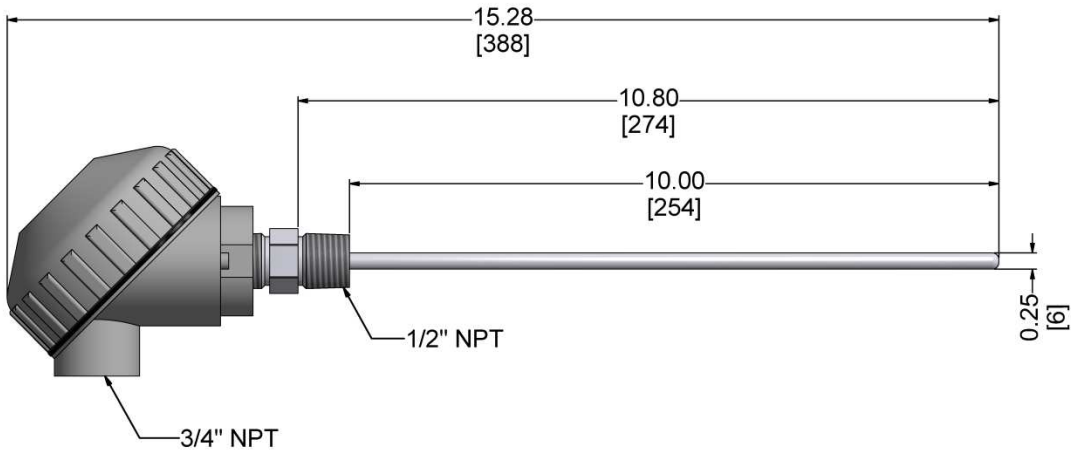

QAM-P224

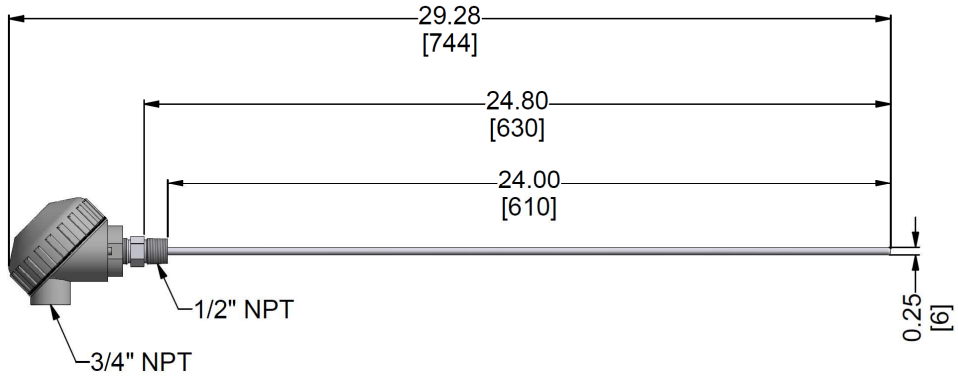

Appendix A

Resistance vs. Temperature Charts

Pt100, 385 characteristic (QAE2012.903, QAE2020.001, QAM-P310)

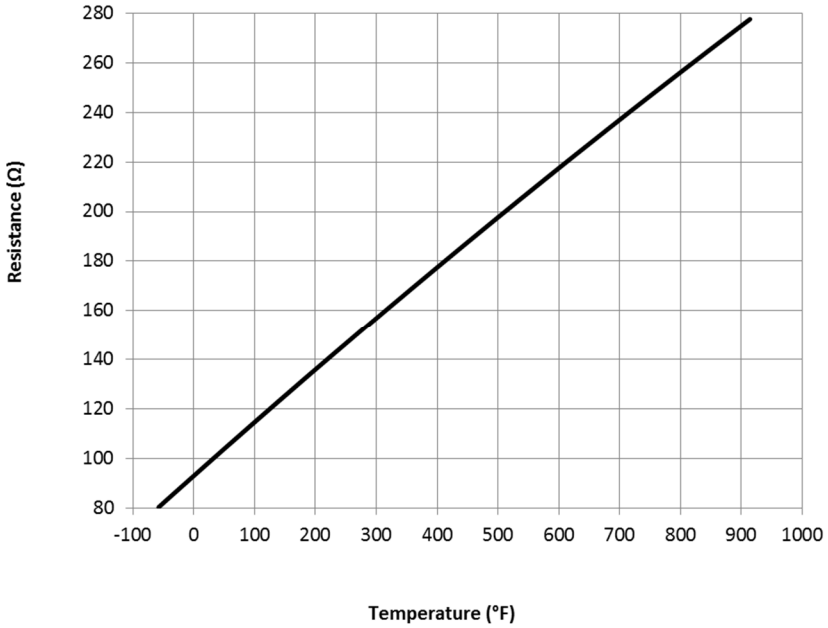

Pt1000, 385 characteristic (QAE2012.001, 544-577-25, 544-577-40, 544-577-60, QAE2012.9002, QAM-P206, QAM-P210, QAM-P224)

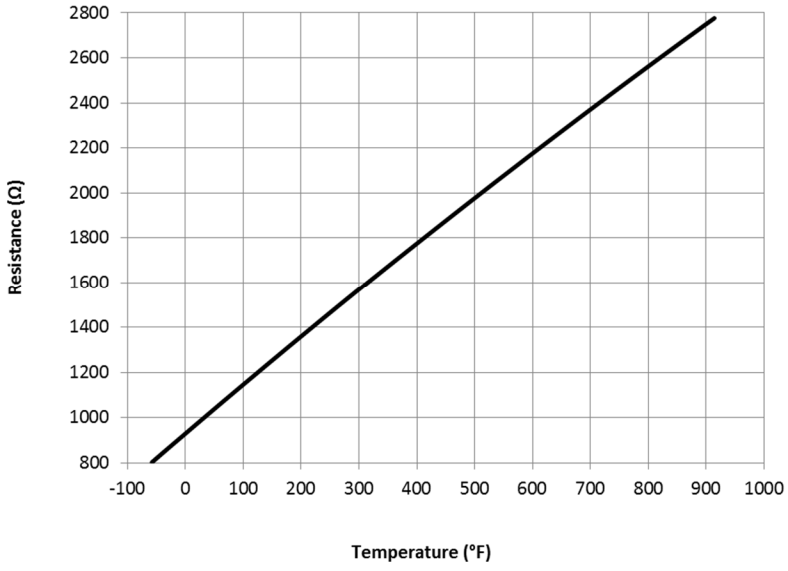

Appendix A (continued)

Resistance vs. Temperature Charts

Ni1000, LG characteristic (QAE2020.005, QAE2020.010, QAE2020.015, QAC22)

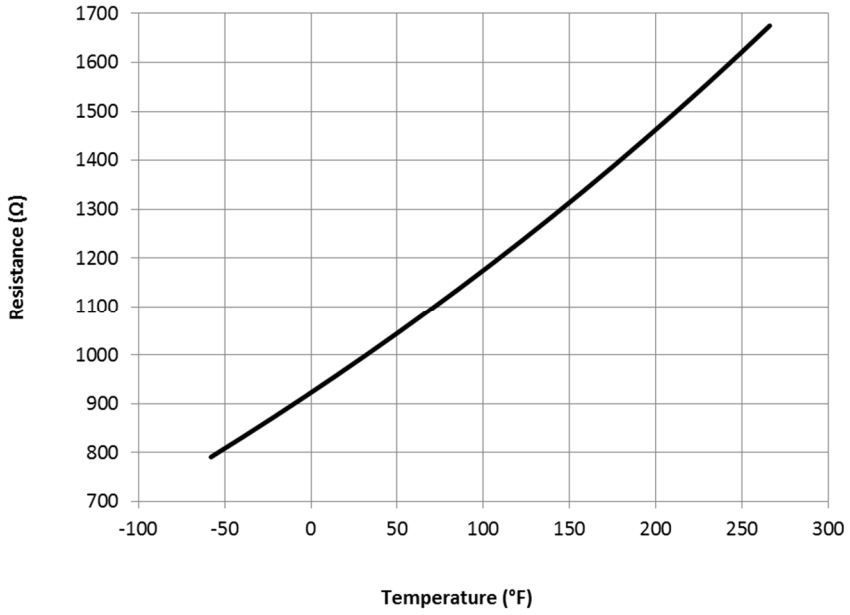

Appendix A (continued)

Accuracy

Pt100 and Pt1000 Sensors (QAE2012.001, QAE2020.001, 544-577-25, 544-577-40, 544-577-60, QAE2012.903, QAE2012.9002, QAM-P206, QAM-P210, QAM-P310, QAM-P224)

Accuracy = ± [0.54 + (0.005 x |T - 32|)]

T = Temperature in degrees Fahrenheit

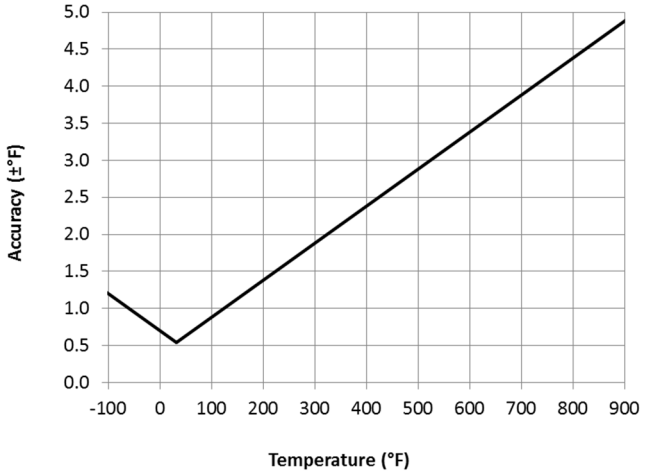

Ni1000 Sensors (QAE2020.005, QAE2020.010, QAE2020.015, QAC22)

For T < 32: Accuracy = ± [0.72 + (0.028 x |T - 32|)]
For T > 32: Accuracy = ± [0.72 + (0.007 x |T - 32|)]

T = Temperature in degrees Fahrenheit

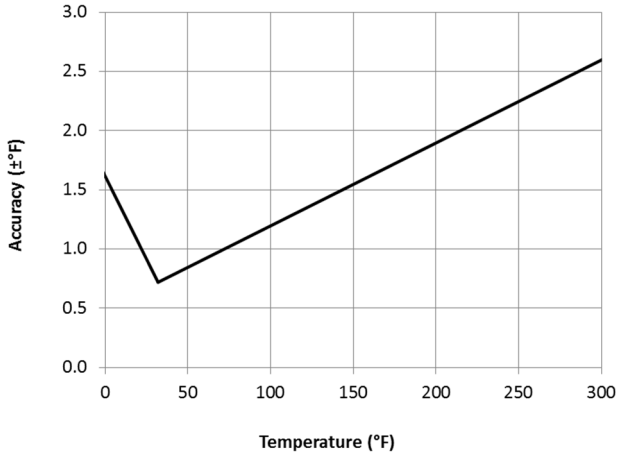

Information in this publication is based on current specifications. The company reserves the right to make changes in specifications and models as design improvements are introduced. Product or company names mentioned herein may be the trademarks of their respective owners. © 2022 SCC Inc.