2F..

Two-way Single Seat Globe Valves



APPLICATION AND USE

2F.. series valves are used to control fluids belonging to the group showed in the table according to article 13 of 2014/68/UE directive (PED) in air-conditioning, thermoventilation and heating plants and in industrial processes; therefore, they cannot be employed as safety valves.

MANUFACTURING CHARACTERISTICS

They consist in a two-way simple seat valve body to be assembled on an electrical bidirectional actuator.

MOTORIZED VALVES TECHNICAL CHARACTERISTICS AND PERFORMANCES

TECHNICAL DATA	2FGB DN25÷150	2FGA DN15÷100	2FSA DN25÷65	2FAA DN15÷80	2FAA.P DN15÷80	2FAA.T DN15÷80
Construction	PN16	PN16	PN25	PN40	PN40	PN40
Body	grey cast iron	grey cast iron	spheroidal cast iron	steel	steel	steel
Seat	grey cast iron	stainless steel	stainless steel	stainless steel	stainless steel	stainless steel
Plug	brass (DN25÷100) bronze (DN125÷150)	stainless steel	stainless steel	stainless steel	stainless steel	stainless steel
Stem (Ø 9mm)	stainless steel	stainless steel	stainless steel	stainless steel	stainless steel	stainless steel
Control characteristics	equalpercentage	equalpercentage	equalpercentage	equalpercentage	equalpercentage	equalpercentage
Stem packing	EPDM O-Ring (3)	Teflon V-ring	Teflon V-ring	Teflon V-ring	(2)	(2)
Max. fluid T. °C	150	200	230	230	350	230
Min. fluid T. °C	-10 (1)	-10 (1)	-10 (1)	-10 (1)	-10 (1)	-20 (1)
Storage temp.	-20T60°C					
Fluids (4)	Group 2	Group 2	Group 2	Group 2	Group 1	Group 1
Connections	Flanged PN16	Flanged PN16	Flanged PN25	Flanged PN40	Flanged PN40	Flanged PN40
Leakage % Kvs (5)	0,03	0,02	0,02	0,02	0,02	0,02
Lowered stem action	normally open	normally closed	normally open	normally closed	normally closed	normally closed

(1) For applications with possible ice formation on stem and gasket, see 248 accessory.
(2) Graphite packing for high temp.; forced lubrication on extended neck. Teflon gasket for low temperatures, see (3).
(3) Double O-ring and graphited teflon scraper ring.
(4) Group 1: just diathermic oil. For different fluids, please contact our Sales Support.
Group 2: water, overheated water, glycol added water 50% max., steam. For different fluids, please contact our Sales Support.
(5) Leakage is measured according to the EN1349 standard.

The performances stated in this sheet can be modified without any prior notice.

INSTALLATION

Hydraulic connections

Respect the fluid direction as indicated by the arrow on the valve body or, in case letters are used with inlet in A and outlet AB.

Valve with variable flow to the user

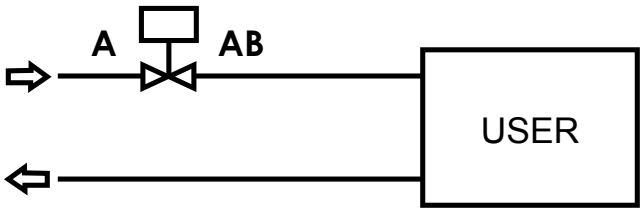

Valve with constant flow to the user

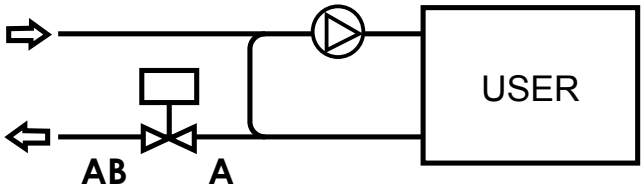

Valve mounting

Before mounting the valve, make sure pipes are clean, free from welding slags. The pipes must be perfectly aligned with the valve body and not subjected to vibrations. For installations on plants with high temperature fluids (steam, overheated water, diathermic oil) use expansion joints to avoid the dilatation of pipes to stress the valve body. Install the valves with the actuator in vertical position for fluid temperature up to 120°C; with higher temperatures they should be mounted horizontally.
Avoid the valve installation in plants which are considered aggressive and/or corrosive for valve materials.
Please contact our Sales Support in order to define which potentially aggressive or polluting substances can be used.
We disclaim all responsibility in case of valve failure due to external fortuitous events (fire, earthquakes etc.).

NOTE: The actuator can be rotated with respect to the valve body by blocking the ring nut; after such operation re-tighten the ring nut.

ACTUATORS TECHNICAL CHARACTERISTICS, ELECTRICAL WIRING DIAGRAM AND INSTALLATION

See actuators data sheets and mounting instructions.

MOTORIZED VALVES OPTIONS

A125-2	Flanges with ANSI 125 bolt holes (for 2FGA DN25,32,50,65 and 2FGB DN25÷150 valves)
A150-2	Flanges with ANSI 150 bolt holes (for 2FAA DN32÷65 and 2FSA DN50÷65 valves)
A300-2	Flanges with ANSI 300 bolt holes (for 2FSA DN25÷65 and 2FAA DN15,32,40,50,65 valves)
2FGBxxPS89	Grooved valves PN16 to which it is possible to add the relating joint not supplied with the product. General dimensions remain the same. Joint and pipe dimensions are shown in the "Dimensions" paragraph.

ACCESSORIES

248	Stem heater for applications on -10°C low temperature fluid with MVH and MVE actuators
GVB40	Thermal insulation for DN40 for 2FGB40 valves
GVB50	Thermal insulation for DN50 for 2FGB50 valves
GVB65	Thermal insulation for DN65 for 2FGB65 valves
GVB80	Thermal insulation for DN80 for 2FGB80 valves
GVB100	Thermal insulation for DN100 for 2FGB100 valves
GVB125	Thermal insulation for DN125 for 2FGB125 valves
GVB150	Thermal insulation for DN150 for 2FGB150 valves
GVB40PS89	Thermal insulation for DN40 for 2FGB40PS89 valves
GVB50PS89	Thermal insulation for DN50 for 2FGB50PS89 valves
GVB65PS89	Thermal insulation for DN65 for 2FGB65PS89 valves
GVB80PS89	Thermal insulation for DN80 for 2FGB80PS89 valves
GVB100PS89	Thermal insulation for DN100 for 2FGB100PS89 valves
GVB125PS89	Thermal insulation for DN125 for 2FGB125PS89 valves

MAX DIFFERENTIAL AND CLOSE-OFF PRESSURE (kPa)

MODEL	DN	KVS	MVH	MVHA/C*	MVH3K	MVE.06	MVE.10	MVE.15	MVE.22
			A-AB	A-AB	A-AB	A-AB	A-AB	A-AB	A-AB
2FGA	15R0	0,6	1600	1600	1600	1600	1600	1600	1600
	15R1	1							
	15R2	1,6							
	15R3	2,5							
	15	4	1600	1600	1600	1600	1600	1600	1600
	20	6,3	1600	1510	1600	1250	1600	1600	1600
	25	10	1600	920	1600	760	1410	1600	1600
	32	16	1600	920	1600	760	1410	1600	1600
	40	24	1340	620	1600	510	950	1500	1600
	50	32	870	400	1600	330	620	980	1480
	65	63	350	160	830	130	250	400	610
	80	110	230	100	550	80	160	260	400
	100	140	140	60	350	50	100	160	250
2FAA 2FAA..P 2FAA..T	15R2	1,6	3000	3000	3000	3000	3000	4000	4000
	15	4	3000	1870	3000	1450	3210	4000	4000
	20	6,3	2840	1110	3000	850	1900	3220	4000
	25	10	1740	670	3000	510	1160	1980	3110
	32	16	1740	670	3000	510	1160	1980	3110
	40	24	1170	450	2920	340	780	1330	2100
	50	32	760	290	1910	220	510	870	1370
	65	63	310	110	790	80	200	350	560
	80	110	200	70	520	50	130	230	370
2FGB	25R4	4	1600	1100	1600	940	1590	1600	1600
	25R7	6,3	1600	1100	1600	940	1590	1600	1600
	25	10	1600	1100	1600	940	1590	1600	1600
	32 (1)	19	1170	590	1600	500	860	1300	1600
	40R19	19	1170	590	1600	500	860	1300	1600
	40	25	1170	590	1600	500	860	1300	1600
	50	40	730	360	1600	310	530	810	1200
	65	63	430	210	960	180	310	480	710
	80	100	280	130	620	110	200	310	460
	100	130	170	80	390	70	120	190	290
	125	200	100	50	240	40	70	120	180
	150	300	70	30	160	30	50	80	120
2FSA	25R4	4	2500	2150	2500	1850	2500	2500	2500
	25R7	6,3	2150	1080	2500	930	1580	2390	2500
	25	10	2150	1080	2500	930	1580	2390	2500
	32	16	1450	730	2500	620	1060	1610	2390
	40	25	1040	520	2310	440	760	1160	1720
	50	40	660	330	1470	280	480	740	1090
	65	63	390	190	860	160	280	430	640
2FGBxxPS89	40	25	1170	590	1600	500	860	1300	1600
	50	40	730	360	1600	310	530	810	1200
	65	63	430	210	960	180	310	480	710
	80	100	280	130	620	110	200	310	460
	100	130	170	80	390	70	120	190	290
	125	200	100	50	240	40	70	120	180

100kPa = 1bar = 10m_{H_2O}

(1) Same dimensions as a DN40 valve

Kvs is the flow rate expressed in m3/h of water at a temperature between 5°C and 40°C passing through a valve open at the nominal stroke with 100kPa (1bar) differential pressure.

*2FGB-2FSA valves: in emergency MVH.A valve closed; MVH.C valve open.
2FGA-2FAA valves: in emergency MVH.A valve open; MVH.C valve closed.

MAX REGULATION DIFFERENTIAL PRESSURE (kPa)

The max regulation differential pressure, it means the pressure which can be used during the stroke, is conditioned by wear between seat and plug and by the performance guaranteed by the actuator for the evaluated valve. So we recommend not to overcome the differential pressure whose value corresponds to the minimum between the one here following (maximum admitted value not to cause wear) and the one shown in the previous table (max close-off differential pressure).
2FGB = 200kPa
2FGA = 600kPa
2FSA = 800kPa
2FAA/2FAAP/2FAAT = 1200kPa
NOTE: The max operating pressures at different temperatures for various PN classes must correspond to the following standards: UNI 1092-02 and UNI 12516-1.

DIMENSIONS [mm]

2FGB

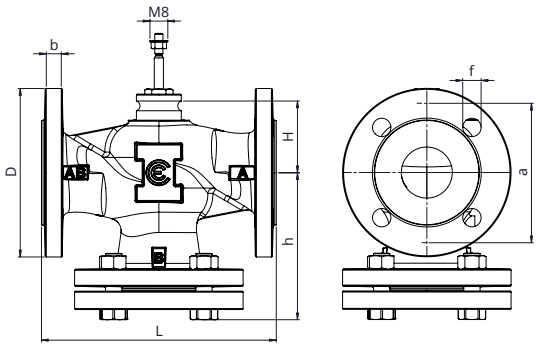

2FSA

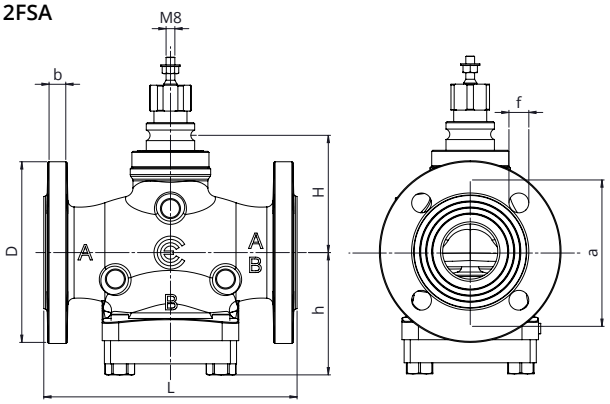

2FGA/2FAA

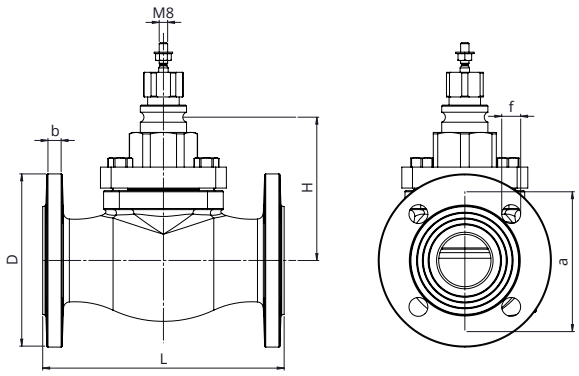

2FA.P

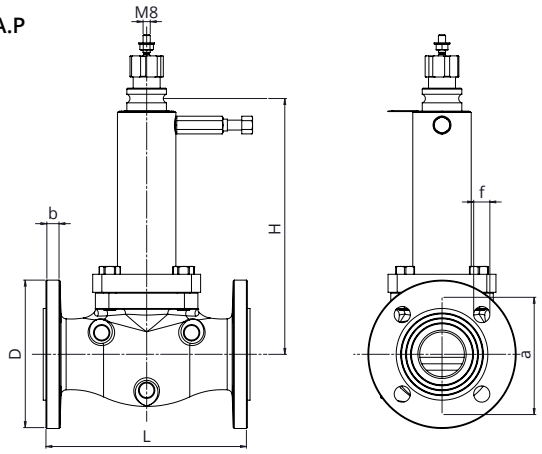

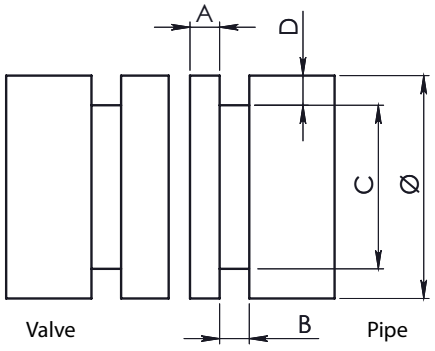

Valve DN	grooved joint DN	Ø			A	B	C		D
		external pipe diameter			gasket seat	groove width	groove diameter		groove depth (ref.)
		base	max	min	± 0.76*	± 0.76*	max	min	
40	50	60,30	60,90	59,70	15,88	7,95	57,20	56,80	1,6
50	65	76,10	76,90	75,40	15,88	7,95	72,30	71,80	1,98
65	80	88,90	89,80	88,10	15,88	7,95	84,90	84,50	1,98
80	100	114,30	115,40	113,50	15,88	9,53	110,10	109,60	2,11
100	125	139,70	141,10	138,90	15,88	9,53	135,50	135	2,11
125	150	168,30	169,90	167,50	15,88	9,53	164	163,40	2,16

* ± 0,76 for grooved joint DN < 100
  ± 1,14 for grooved joint DN ≥ 100

MODEL	DN	L	H	h	D	b	a	f	N° holes	Weight [Kg]	Stroke [mm]
2FGB PN16	25	160	50	106	115	16	85	14	4	6,8	16,5
	32 (1)	200	64	128	150	18	100	18	4	12	25
	40	200	64	128	150	18	110	18	4	12	25
	50	230	66	145	165	20	125	18	4	17	25
	65	290	84	175	185	20	145	18	4	23	25
	80	310	94	187	200	22	160	18	8	30	45
	100	350	105	207	220	22	180	18	8	45,6	45
	125	400	128	234	250	24	210	18	8	55	45
	150	480	146	277	285	24	240	22	8	71	45
2FGA PN16	15	130	107	--	95	16	65	14	4	3,5	16,5
	20	150	109	--	105	16	75	14	4	4,5	16,5
	25	160	112	--	115	16	85	14	4	5,5	16,5
	32	180	121	--	140	18	100	18	4	8,7	25
	40	200	129	--	150	18	110	18	4	10,3	25
	50	230	137	--	165	20	125	18	4	13,7	25
	65	270	175	--	185	20	145	18	4	19,6	25
	80	310	190	--	200	22	160	18	8	31,7	45
	100	350	215	--	220	24	180	18	8	43,5	45
2FAA PN40	15	130	107	--	95	16	65	14	4	4,1	16,5
	20	150	109	--	105	16	75	14	4	5,1	16,5
	25	160	112	--	115	16	85	14	4	6,1	16,5
	32	180	121	--	140	18	100	18	4	10,1	25
	40	200	152	--	150	18	110	18	4	12,3	25
	50	230	160	--	165	20	125	18	4	17	25
	65	270	175	--	185	20	145	18	8	23,8	25
	80	310	190	--	200	22	160	18	8	32	45
2FSA PN25	25	160	92	83	115	18	85	14	4	6	16,5
	32	180	97	102	140	18	100	18	4	10	25
	40	200	98	104	150	18	110	18	4	11	25
	50	230	107	110	165	20	125	18	4	16	25
	65	270	117	124	185	22	145	18	8	20	25
2FAAP 2FAAT PN40	15	130	178	--	95	16	65	14	4	6,2	16,5
	20	150	180	--	105	18	75	14	4	8,3	16,5
	25	160	183	--	115	18	85	14	4	8,6	16,5
	32	180	269	--	140	18	100	18	4	14,7	25
	40	200	277	--	150	18	110	18	4	15,4	25
	50	230	285	--	165	20	125	18	4	25	25
	65	270	300	--	185	22	145	18	8	29	25
	80	310	315	--	200	24	160	18	8	38	45

(1) Same dimensions as a DN40 valve