Control Point

MODEL	SENSORS		
	TEMPERATURE	CO_2	HUMIDITY
CP-DISP-B/W*	•		
CP-C-DISP-B/W*	•	•	
CP-H-DISP-B/W*	•		•
CP-HC-DISP-B/W*	•	•	•

*B/W: all panels are available in black or white, which is reflected in the last letter of the product code, e.g., CP-H-DISP-B or CP-C-DISP-W.



APPLICATION AND USE

Control Point is a wall panel with a 2.6" LCD display and four buttons for fan control, occupancy, and temperature setpoint. The panel has a built-in temperature sensor and, optionally, humidity and/or CO_2 sensors. The Control Point panel is powered with 24 V AC/DC and has a built-in RS485 port (Modbus RTU/ASCII, BACnet MS/TP). The use of open communication protocols allows to connect the panel with any controller supporting Modbus RTU/ASCII or BACnet MS/TP. Together with the Comfort Managenet zone controllers, the panel allows to adjust basic parameters such as a temperature setpoint, fan speed, FCU mode, and others. Thanks to a built-in USB port, there is a possibility to configure the panel without a power supply. The Control Point panel has a modern design and is available in two colors, black and white.

FEATURES

- Modern and smart design
- Intuitive management
- UL listed
- Multiprotocol RS485 interface - Modbus RTU/ASCII and BACnet MS/TP
- Plug and play connection with iSMA CONTROLLI zone controllers
- Easy integration in Niagara and Sedona Framework
- Easy on/off configuration of selected parameters such as screen, keypad, sensors, and more
- Setting user-defined parameters to control lighting, blinds, alarms and more
- Advanced configuration of Setpoint, Fan, and Occupancy control
- Optional, password-protected submenus
- 2.6" LCD backlight display with support for Celcius and Fahrenheit units
- 0-100% backlight configuration of LCD and keypad in idle/standby/active modes
- Displaying custom values from the BMS using one of the 21 icons and 9 units
- Temperature sensor as a standard, humidity and CO_2 sensors as an option
- DIP switches for configuration
- Configurable on/off buzzer
- Local or remote configuration of device settings
- Daisy-chain connection of multiple panels with Smart-Plug
- Supported junction boxes: EU single 65 mm, UK single 65 mm, US single vertical 2x4
- Free-of-charge software: iSMA Configurator

TECHNICAL CHARACTERISTICS

DESCRIPTION		CONTROL POINT
Power supply	Voltage	20-34 V DC
		24 V AC ± 20%
	Power consumption	0.6 W at 24 V DC, 1.8 VA at 24 V AC - panels without CO_2 sensor 0.9 W at 24 V DC, 2.5 VA at 24 V AC - panels with CO_2 sensor
Built-in sensors	Temperature sensor	10k NTC type, range: 0-50˚C (32-122 °F), accuracy: ± 0.5˚C (0.5°F), resolution: ± 0.1˚C (0.1°F)
	Humidity sensor (applies to version with humidity sensor)	Range: 0-100% RH, accuracy: ± 2% RH in range 10-90% RH, resolution: ± 1% RH
	CO_2 sensor (applies to version with CO_2 sensor)	Range: 400-2000 ppm, accuracy: 50 ppm + 5% of reading

The performances stated in this sheet can be modified without any prior notice.

DESCRIPTION		CONTROL POINT
COM1	RS485 interface	Up to 128 devices
		Half- duplex
	Communication protocols	Modbus RTU/ASCII, BACnet MS/TP
	Ports	2 smart plug over RJ45 + screw connector
	Baud rate	2400-115200
USB1	Type	USB type C
	Power supply	5 V DC
Front panel	Display	LCD 2.6”
	Buttons	4 buttons (up +, down -, fan, occupancy)
Ingress protection	IP rating	IP20 for indoor installation
Temperature	Operating	From 0°C to +50°C (32°F to 122°F)
	Storage	From -40°C to 85°C (-40°F to 185°F)
Humidity	Relative	From 5% to 95% RH (without condensation)
Screw connector	Type	Removable screw terminals
	Maximum cable size	1.5 mm^2 (26...16 AWG)
Housing	Material	UL94-V0 plastic enclosure, self-extinguishing PC/ABS
	Mounting	• EU single 65 mm, UK single 65 mm, US single vertical 2x4
Dimensions	Width	86.30 mm/3.40 in
	Lenght	129.30 mm/5.10 in
	Height	24.80 mm/0.98 in

WIRING DIAGRAMS

Power Supply

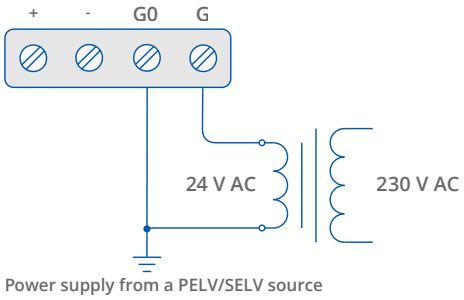

Power supply from a PELV/SELV source

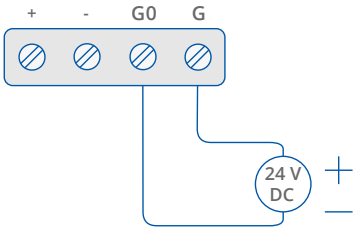

Power supply from a PELV/SELV source

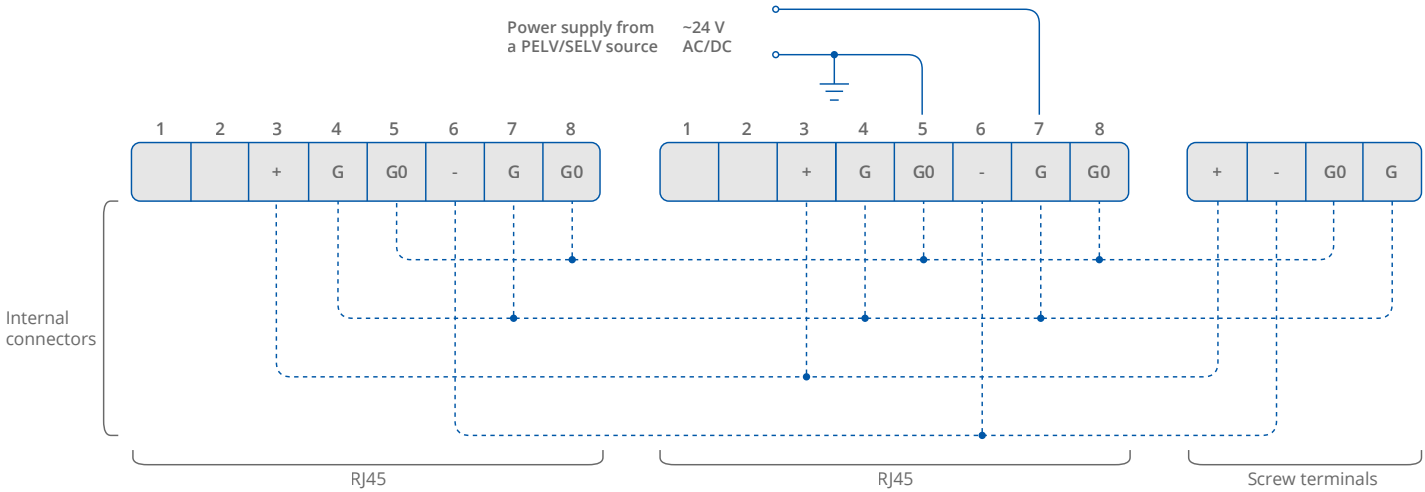

Communication

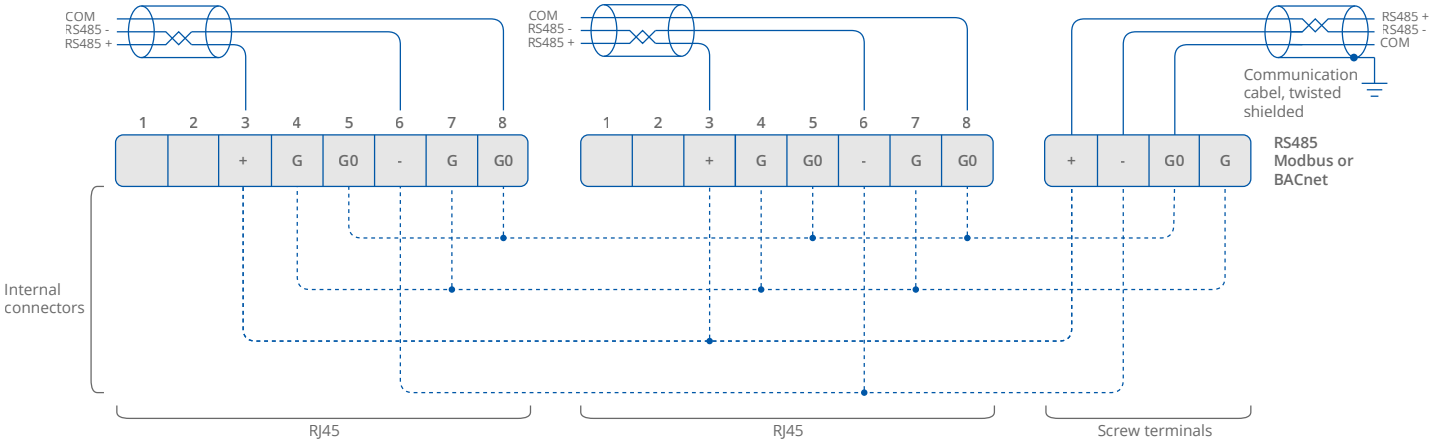

APPLICATION EXAMPLE

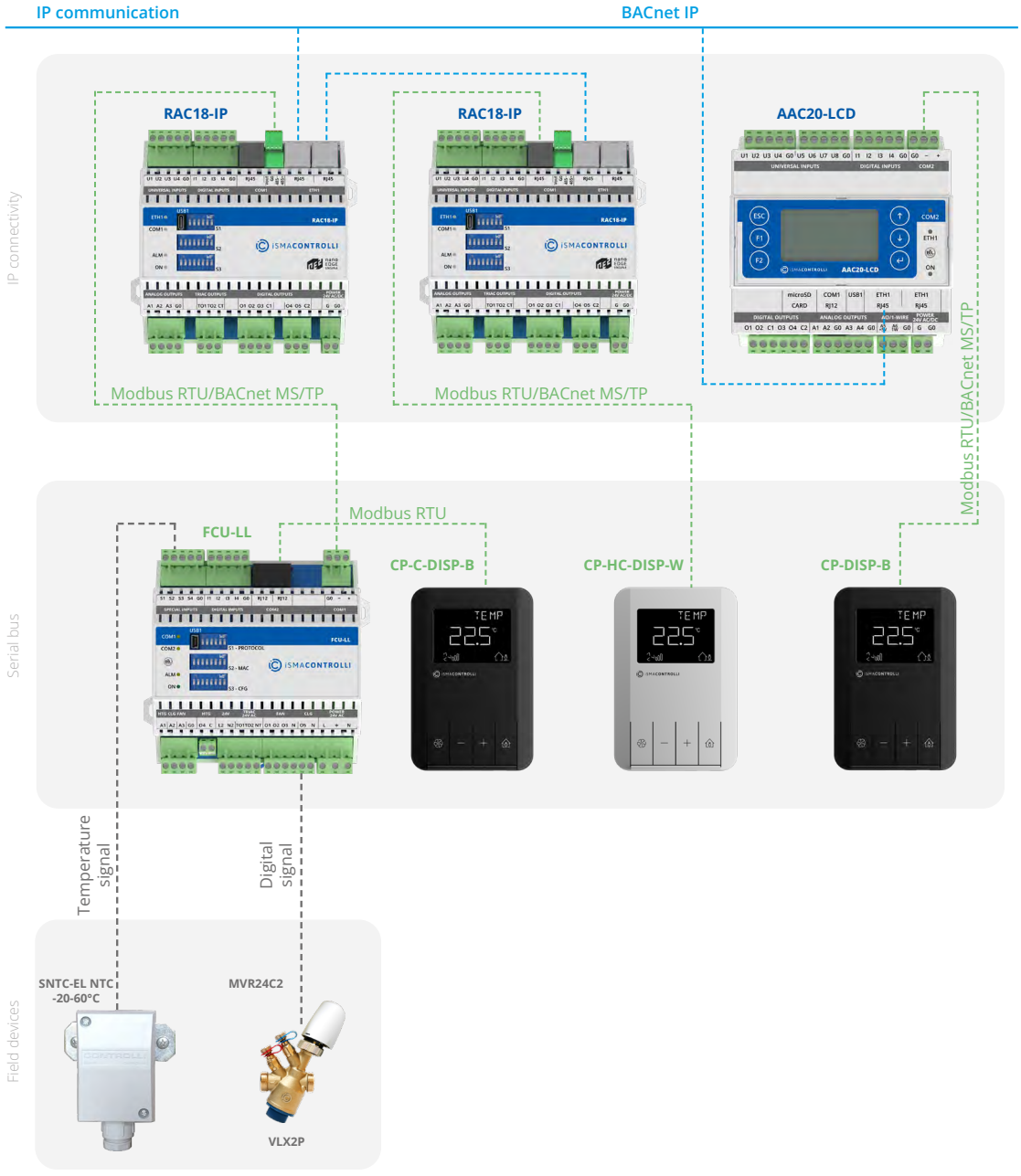

DEDICATED SOFTWARE

iSMA Configurator - configuration tool for non-programmable iSMA CONTROLLI devices

ACCESSORIES

CONNECTION TO CONTROLLERS:	RJ12-RJ45 CABLES
iSMA-B-FCU-HH iSMA-B-FCU-HL iSMA-B-FCU-LL	**iSMA-B-RJ12-RJ45-5**: 5 m RJ12-RJ45 cable
	iSMA-B-RJ12-RJ45-10: 10 m RJ12-RJ45 cable
	iSMA-B-RJ12-RJ45-15: 15 m RJ12-RJ45 cable
	iSMA-B-RJ12-RJ45-20: 20 m RJ12-RJ45 cable

DIMENSIONS [mm, in]

