Chrome Hardware Finish, Black Base Shown

Specification Features

- KIT INCLUDES SHOWER ENCLOSURE WITH BASE
- SPACE-SAVING CURVED CORNER DESIGN
- DUAL CENTER-SLIDING DOORS
- FULL LENGTH MAGNETIC STRIP FOR WATERTIGHT CLOSURE
- WALL PROFILES ALLOW UP TO 1 IN. ADJUSTMENT PER SIDE
- 1/4 IN. (6 MM) THICK CERTIFIED CLEAR TEMPERED GLASS

Technical Information

- Model: Prime
- Product Type: Enclosure and Base Kit
- Dimensions: 33 in. D x 33 in. W x 74 3/4 in. H
- Access Width Max: 18 11/16"
- Access Width Min: 18 11/16"
- Glass Thickness: 1/4" [6 mm]
- Glass Type: Frosted

-

Codes/Standards Applicable

- ANSI Z97.1 (Tempered Glass)
- 16 CFR Part 1201

Hardware Finish Options:

- 01 - Chrome
- 04 - Brushed Nickel
- 06 - Oil Rubbed Bronze
- 09 - Matte Black

Model SKU#s:

White Base	Biscuit Base	Black Base
DL-6701-01FR	DL-6701-**22**-01FR	DL-6701-**89**-01FR
DL-6701-04FR	DL-6701-**22**-04FR	DL-6701-**89**-04FR
DL-6701-06FR	DL-6701-**22**-06FR	DL-6701-**89**-06FR
DL-6701-09FR	DL-6701-**22**-09FR	DL-6701-**89**-09FR

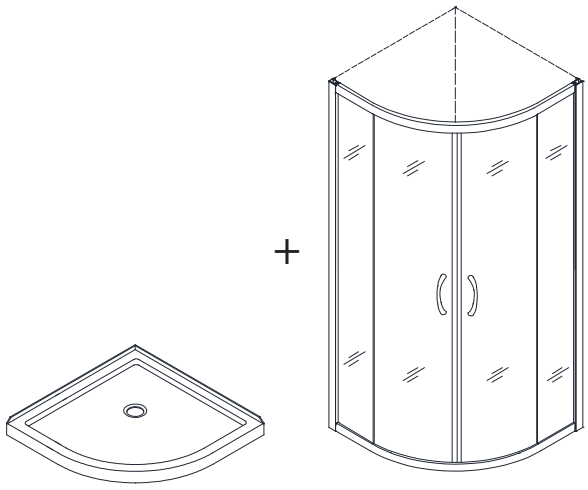

Rev: 02.2024 / DreamLine LLC. / Warminster, PA / 1-866-282-8413 / www.DreamLine.com
DreamLine LLC. Reserves the right to make revisions without notice to product specifications.

Available Product Configurations:

Shower Enclosure Model SKU#s:

SHEN-7031310-XX	31 3/8 in. x 31 3/8 in
SHEN-7034340-XX	34 3/8 in. x 34 3/8 in.
SHEN-7036360-XX	36 3/8 in. x 36 3/8 in.

Frosted Glass Enclosures:

SHEN-7031310-XX-FR	31 3/8 in. x 31 3/8 in.
SHEN-7034340-XX-FR	34 3/8 in. x 34 3/8 in.
SHEN-7036360-XX-FR	36 3/8 in. x 36 3/8 in.

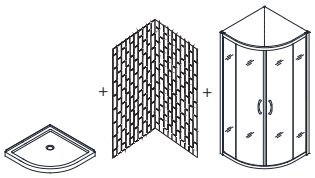

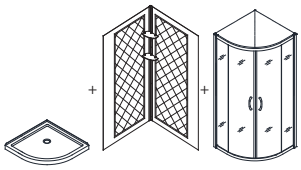

Complete Shower Kit SKUs:

E2703333XXQ00XX
E2703636XXQ00XX
E2703838XXQ00XX

Frosted Glass Kits:

E2703333XFQ00XX
E2703636XFQ00XX
E2703838XFQ00XX

Complete Shower Kits:

DL-6152-XXCL
DL-6153-XXCL
DL-6154-XXCL

Frosted Glass KIts:

DL-6152-XXFR
DL-6153-XXFR
DL-6154-XXFR

Important Notes:

If this unit is going to be installed in a new construction, please, install all of the required plumbing and drainage before installing the shower. Use a competent and licensed plumber for all plumbing installation period.

Anodized aluminum wall profiles allow up to 1 in. adjustment per side.

Bases must be installed direct-to-stud; Shower enclosures or doors require finished (tiled) walls.

Professional installation recommended. Please consult the technical drawing for precise drain location.

Important Disclaimers:

- Prior to installation, please ensure that the installation surface is finished, level and solid and will be able to support the total weight of the unit. Also, make sure that the walls are plumb. Irregular installation, surface level or out of square conditions can result in serious problems for your installation.

- Please read Installation Manual thoroughly prior to installing this product.

- Please note that you should consult your local building codes with questions on installation compliance standards. Building and plumbing codes may vary by location, and DreamLine® is not responsible for code compliance standards for your project and will not accept any returns.

Rev: 02.2024 / DreamLine LLC. / Warminster, PA / 1-866-282-8413 / www.DreamLine.com
DreamLine LLC. Reserves the right to make revisions without notice to product specifications.