Specification Features

- ENCORE SHOWER DOOR AND SLIMLINE SHOWER BASE
- UP TO 3/8 IN. FOR OUT-OF-PLUMB (UNEVEN WALLS)
- UP TO 4 IN. FOR WIDTH ADJUSTMENT
- 5/16 IN. (8 MM) THICK CERTIFIED TEMPERED GLASS
- REVERSIBLE FOR RIGHT OR LEFT DOOR INSTALLATION
- CLEARMAX WATER /STAIN RESISTANT GLASS COATING
- LOW PROFILE BASE THRESHOLD DESIGN FOR EASY ENTRY
- SLIP-RESISTANT TEXTURED FLOOR PATTER

Technical Information

- Model: Encore
- Door Type: Double Sliding Bypass Door
- Dimensions: 34" D x 48" W x 78 3/4" H
- Access Width Max: 21 1/2"
- Access Width Min: 17 1/2"
- Access Height Max: 74"
- Glass Thickness: 5/16" [8 mm]
- Glass Type: Clear
- Glass Coating: ClearMax
- Base Type: Single Threshold
- Base Color: Black

Codes/Standards Applicable

- ANSI Z97.1 (Tempered Glass)
- 16 CFR Part 1201

Hardware Finish Options:

- 01 - Chrome
- 09 - Satin Black

Model SKU#s:

DL-7009C-88-01
DL-7009C-88-09

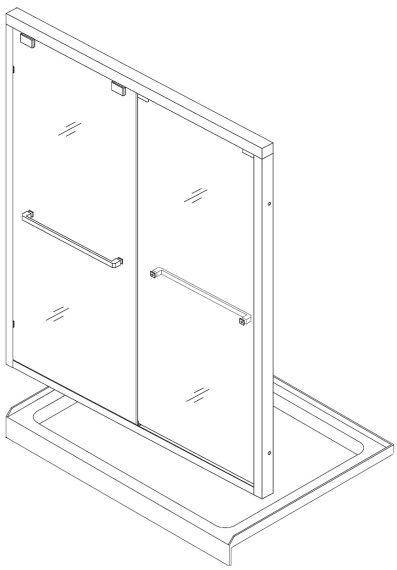

Rev: 10.2024 / DreamLine LLC. / Warminster, PA / 1-866-282-8413 / www.DreamLine.com
DreamLine LLC. Reserves the right to make revisions without notice to product specifications.

Available Shower and Tub Doors:

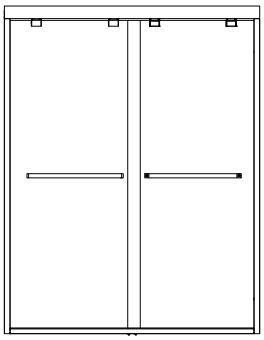

Encore Shower Door

Model #s:
SHDR-1648760-XX Clear Glass
SHDR-164876G-XX Gray Glass
SHDR-1654760-XX Clear Glass
SHDR-165476G-XX Gray Glass
SHDR-1660760-XX Clear Glass
SHDR-166076G-XX Gray Glass

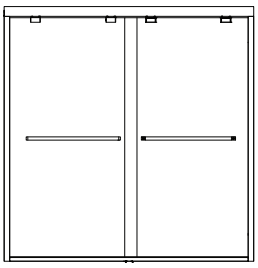

Encore Tub Door

Model #:
SHDR-1660580-XX Clear Glass
SHDR-166058G-XX Gray Glass

Important Notes:

If this unit is going to be installed in a new construction, please, install all of the required plumbing and drainage before installing the shower. Use a competent and licensed plumber for all plumbing installation period.

Install this product according to the installation manual. Professional installation is recommended.

Model can be trimmed up to 4 in. for width adjustment.

Wall profiles accommodate up to 3/8 in. for out-of-plumb (uneven walls)

DO NOT attach the handle to the door glass until instructed in the installation manual. DO NOT use the handle to lift the glass during installation. This may result in damage to the glass and/or serious injury.

Important Disclaimers:

- Prior to installation, please ensure that the installation surface is finished, level and solid and will be able to support the total weight of the unit. Also, make sure that the walls are plumb. Irregular installation, surface level or out of square conditions can result in serious problems for your installation.

- Please read Installation Manual thoroughly prior to installing this product.

- Please note that you should consult your local building codes with questions on installation compliance standards. Building and plumbing codes may vary by location, and DreamLine® is not responsible for code compliance standards for your project and will not accept any returns.

For commercial customers, we strongly recommend the use of Dreamline's Onsite Contractor Support option.

Dreamline's commercial warranty does not apply to damage or losses resulting from (i) other than normal and proper use and normal service conditions; (ii) improper installation, (iii) installation in or upon an unsuitable surface or areas; (iv) abuse, (v) accident, (vi) alteration, (vii) misuse, (viii) neglect, (ix) unauthorized repair or the failure to utilize suitably qualified and trained persons to perform service and/or repair of the Product, (x) improper maintenance, (xi) failure to follow installation, operating, cleaning or maintenance instructions, and (xii) use of "non-authorized" parts.

Rev: 10.2024 / DreamLine LLC. / Warminster, PA / 1-866-282-8413 / www.DreamLine.com
DreamLine LLC. Reserves the right to make revisions without notice to product specifications.