Elegance Shower Door Style C

Shower Door and Inline Panel Installation Instructions

IMPORTANT
DreamLine® reserves the right to alter, modify or redesign products at any time without prior notice.
For the latest up-to-date technical drawings, manuals, warranty information or additional details please refer to your model's web page on **DreamLine.com**

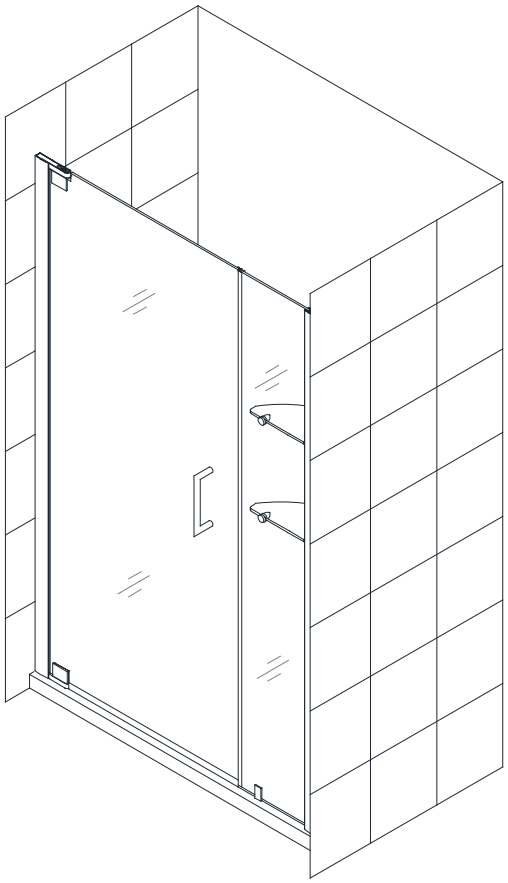

STYLE C

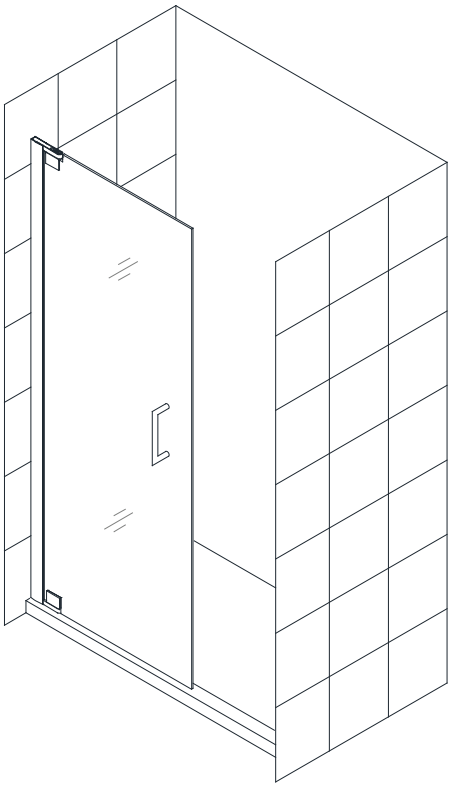

STEP 1: Install Shower Door

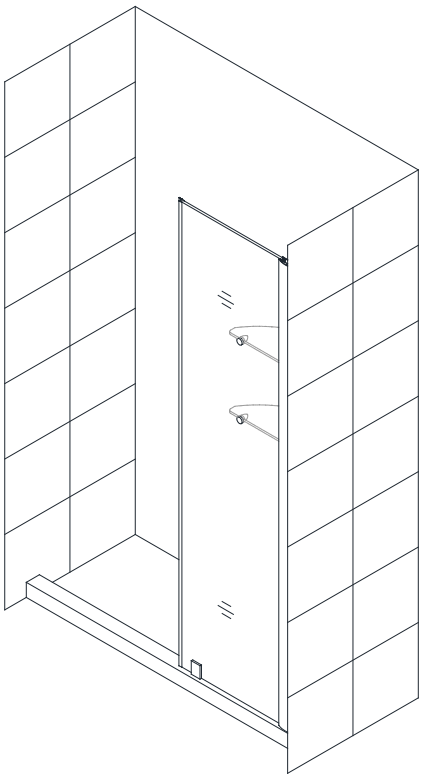

STEP 2: Install Shower Panel

Questions?
*Please Call **DreamLine** Customer Support:* **1-855-831-2126**
Hours of Operation M-F 8AM - 7PM EST and Saturday 9AM - 5PM EST
Support@DreamLine.com

For more information about DreamLine® Shower Doors, Tub Doors & Enclosures, please visit **DreamLine.com**

©2025 DreamLine. All Rights Reserved

ELEGANCE/ELEGANCE-LS (STYLE A) SINGLE DOOR

SHOWER DOOR INSTALLATION INSTRUCTIONS

PLEASE REVIEW THIS ENTIRE MANUAL PRIOR TO INSTALLATION

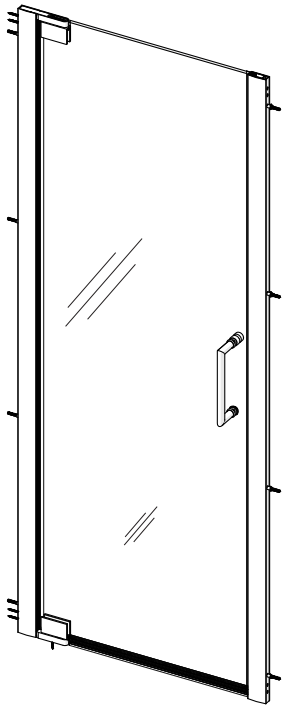

Elegance

Model #s:
SHDR-4125720-##
SHDR-4127720-##
SHDR-4128720-##
SHDR-4130720-##
SHDR-4132720-##
SHDR-4134720-##
SHDR-4135720-##

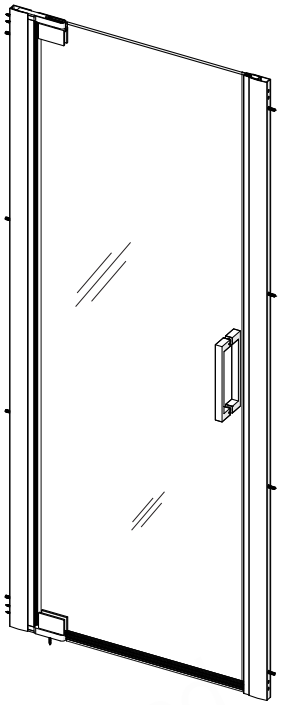

Elegance-LS

Model #s:
SHDR-4325000-##
SHDR-4327000-##
SHDR-4328000-##
SHDR-4330000-##
SHDR-4332000-##
SHDR-4334000-##
SHDR-4335000-##

= Finish:
01 = Chrome
04 = Brushed Nickel
06 = Oil-Rubbed Bronze
09 = Satin Black

*left swing door installation shown

IMPORTANT!
DreamLine® reserves the right to alter, modify or redesign products at any time without prior notice for the purpose of product improvement and customer experience. Please refer to the model's web page on **DreamLine.com** for the latest technical drawings, installation manuals, warranty information or additional product details.

Do Not Return Product to the Store. Contact DreamLine® with any questions

Questions?
Please contact DreamLine Customer Support
*See **DreamLine.com** for hours of operation*

Support@DreamLine.com
1-866-731-2244

©2025 DreamLine® All Rights Reserved

DREAMLINE®
dream in style

Do not remove ClearMax stickers until glass is installed.

CLEARMAX®

This model is treated with DreamLine's exclusive ClearMax™ Glass technology. This is a specially formulated coating that prevents the build up of soap and water spots.

Install the surface with the ClearMax™ label towards the inside of the shower. Please note that depending on the model, the glass may be coated on either one or both surfaces.

For best results, squeegee the glass after each use and dry with a soft cloth.

Record the following purchase information for your records or in the event you need to contact DreamLine®:

Purchase Order Number _____

Installation Date _____

Installed By: _____

Store/Vendor Purchased From _____

OD Number (optional) _____
*found on the shipping box or label if available.

SKU Number _____

©2025 DreamLine® All Rights Reserved

Table of Contents

Section Title	Page #
ClearMax® Coating Information	—
Warnings and General Preparation	2
Model Specific Preparation	3
Tools	4
Configurations	5
Adjustable Wall Profile System	6
Detailed Diagram of Shower Door Components	7
Parts List	8-9
Installation Steps	10-26
Strike Profile Installation	20
Decorative Cover Installation	24
Bottom Sweep Vinyl Installation	25
Securing the Bottom Pivot Assembly to the Threshold (optional)	27
Product Maintenance	28
Troubleshooting	29
Factory Parts Information	30-32

©2025 DreamLine® All Rights Reserved

Symbol Legend

TIP **TIP** - for ease of installation.

CORRECT - recommended.

NOTE **NOTE** - take note of special feature; additional information.

INCORRECT - not recommended.

REQUIRED - requires special attention; signifies a warning.

Average Installation Time

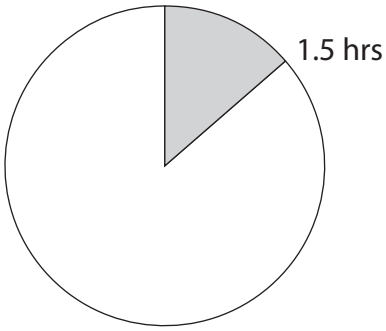

©2025 DreamLine® All Rights Reserved

IMPORTANT

- DreamLine® reserves the right to alter, modify or redesign products any time without prior notice for product improvement and customer experience. Please refer to the model's web page on **DreamLine.com** for the latest technical drawings, installation manuals, warranty information or additional product details.
- This product should be installed by someone familiar with the construction requirements for this type of project and the care necessary for the safe installation and operation of the product.
- The safety of any installation is the responsibility of the installer.
- Professional installation recommended. *(All Models)*
- Professional installation required. *(Enigma Series)*
- To prevent damage or serious injury, Do Not lean against the installed panel/door/glass.
- To prevent damage or serious injury: Do Not attempt to lift or move a heavy lite of glass alone. Use an assistant and/or a professional grade glass suction cup.
- The installation of some models may require drilling down into the threshold. Contact the manufacturer of the base, tub, or threshold material with any questions regarding the drilling of holes into their product.
- All drawings in this installation manual are for illustrative purposes only and are not drawn to scale.

TEMPERED GLASS WARNING

- Your Shower Door Glass Could Shatter Without Warning if Improperly Installed or Mishandled
- Do Not install or operate a shower door if the glass has chipped corners, slivered edges or is otherwise damaged and/or has been dropped or banged into a hard surface such as tile, marble or glass.
- **The main causes of tempered glass breakage are:**
  - Improper handling, storage or installation
  - Misuse/abuse
  - Lack of maintenance
  - Failure to replace damaged glass
  - **Improper handling during storage, unpacking and installation:**
  - Corners and edges are the most susceptible area to damage on a lite of tempered glass and should be protected and handled with care during storage, unpacking, installation and operation. A concentrated point of pressure or impact with a surface harder than itself may cause the tempered glass to shatter. The tempered glass may release immediately, within several hours or even days later.
  - **Incorrect installation of door hardware, rollers, hinges, channels, stopper or glass:**
  - Improper installation may include: loose hardware and/or lack of proper gaskets between the hardware and glass. Additionally, improper alignment of guide rails, wall profiles or other hardware during installation or operation may place stress on the glass edges and cause it to break.
  - This product must be installed by a professional and experienced installer familiar with the safe handling of tempered glass.
  - **Improper use of this product:**
    - Aggressively opening or closing the door may cause trauma to the glass, which can lead to breakage. This may occur immediately or hours or even days later.
    - **The shower door hardware and glass should be inspected periodically:**
      - Instruct the homeowner how to perform a periodic inspection of the shower hardware and glass - some minor adjustments may be necessary based upon the use (or misuse) of the shower door. Ensure that the hardware remains tight and that the door alignment and operation are correct. Any adjustments should be made upon discovery to prevent damage to the product.
      - Additional considerations should be given to the installation of frameless tempered glass products in households with young children or an elderly person due to an increased chance of improper handling. In such cases, alternatives such as shower curtains or grab bars should be considered.

GENERAL PREPARATION

- After opening all boxes and packages, read this introduction carefully. Check that all the items are included in the package by marking off the components on the **"Detailed Diagram of Product Components"** page. Examine all boxes and packages for shipping damage. If the unit has been damaged, has a finishing defect, or is missing parts; please contact our Customer Support department within 3 business days of the delivery date. **Please note that DreamLine® will not replace any damaged products or missing parts free of charge after 3 business days or if the product has been installed.** Please contact DreamLine® if you have any questions.
- **Please note that you should refer to your local building codes with questions on installation compliance standards. Building and plumbing codes may vary by location, and DreamLine® is not responsible for code compliance standards for your project and will not accept any returns.**
- If this unit is going to be installed in a new construction, install all the required plumbing and drainage before installing the shower. **Use a competent and licensed (if required by local code) plumber for all plumbing installation.**
- Make sure that prior to beginning the installation, the surfaces are leveled and solid and will be able to support the total weight of the unit. Also make sure the walls are at right angles. Irregular installation surface level, radius corners or improper angle of side walls will result in serious problems for your installation. Please note that some adjustments and drilling will be necessary during the installation process.
- Protect all primary surfaces of the product during installation. Never set your glass down directly onto a tile floor. Leave corner protectors in place until it is necessary to remove them. Always use a piece of wood or cardboard to protect the bottom edge and corners of the glass prior to and during installation.
- This unit must be installed upon a finished threshold and against finished walls.
- *DreamLine® shower doors are not designed to be installed into a fiberglass surround due to the radius corners and lack of a solid surface to mount the hardware.*

WARNING: TO AVOID THE RISK OF DAMAGE OR INJURY:

- **Follow all recommendations and requirements as shown in the installation instructions.**
- Perform a thorough inspection of the glass and all parts for any damage prior to installation. Any damage to tempered glass can cause breakage.
  Do Not install damaged glass!
- Do Not install or operate a shower or tub door if the glass has chipped corners, slivered edges or is otherwise damaged. Do Not install or operate a shower or tub door that has been dropped or banged into a hard surface such as tile, marble or glass.
- **CAUTION:** Contact with any hard surface can damage tempered glass and cause it to shatter.
- This product uses tempered glass. Glass cannot be cut after it has been tempered.
  Do Not attempt to cut tempered glass.
- DreamLine® Glass Shower doors, Tub doors, Inline panels, and Return panels can shatter due to improper handling or lack of maintenance. Conduct periodic inspections of glass and all parts for possible damage, missing or loose parts.
- Always wear proper safety equipment such as: safety goggles, work gloves and appropriate footwear during the installation process.
- **WARNING. Risk of leakage and/or damage.** Follow all instructions regarding the application of silicone sealant or caulk. Allow 24 hours for the sealant to cure before the initial use of the shower or tub product. Follow the silicone manufacturer's recommendations regarding the use of their product.

- **Thoroughly read these instructions before installing or using this product.**
- **Leave this manual for the end-user of the product.**

This product should be installed by someone familiar with the construction requirements for this type of project and the care necessary for the safe installation and operation of the product.

Model Specific Preparation

REQUIRED:

1" (25.4mm) maximum out-of-plumb adjustment per side. Verify finished walls with a level.

Threshold must be level

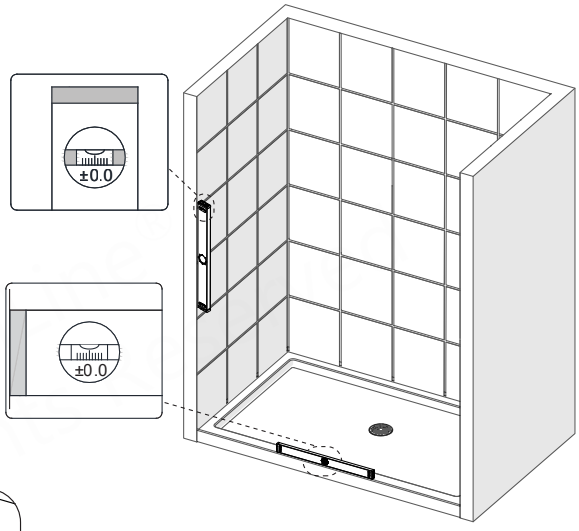

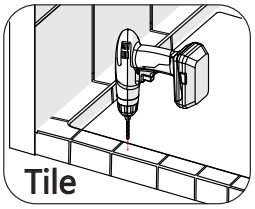

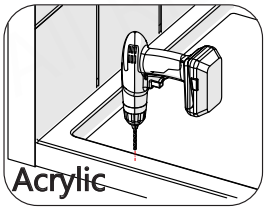

TIP

Contact the manufacturer of the base, tub or threshold material with any questions regarding the drilling of holes into their product.

This model has an adjustable wall profile system that allows for up to 1" (25.4mm) per side for Out-of-Plumb wall conditions and overall width within the model size. For more information, see the Adjustable Wall Profile System on page 6.

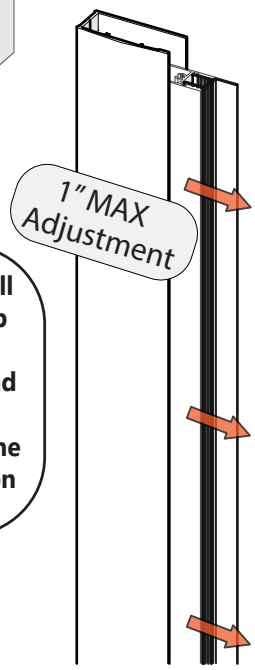

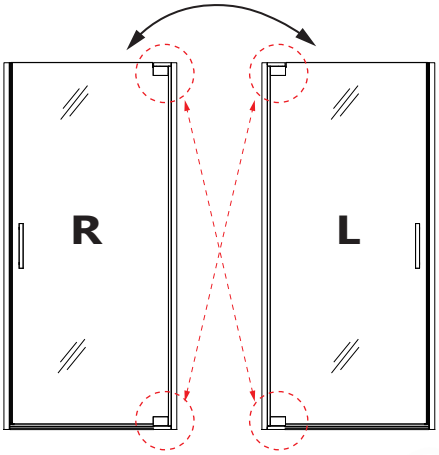

TIP

This door is reversible for right or left-swing door installation. The left-swing door installation is shown as an example throughout this manual. For the right-swing door installation, simply begin on the opposite wall and reverse the orientation of the installation steps shown.

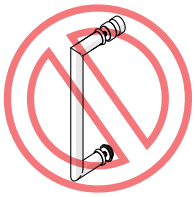

DO NOT install the Handle onto the Door Glass until instructed. DO NOT attempt to lift the glass with the Handle. This could result in damage to the glass and/or serious personal injury. Always use an assistant or a professional-grade glass suction cup when handling heavy glass.

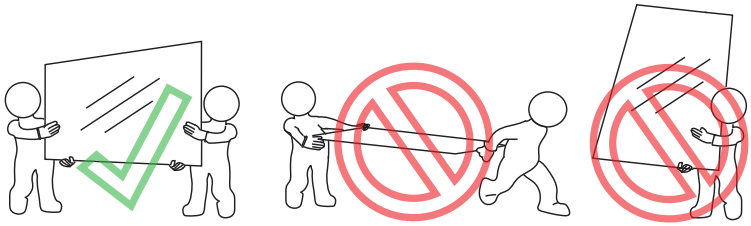

Professional installation recommended. Two installers required.

©2025 DreamLine® All Rights Reserved

Tools

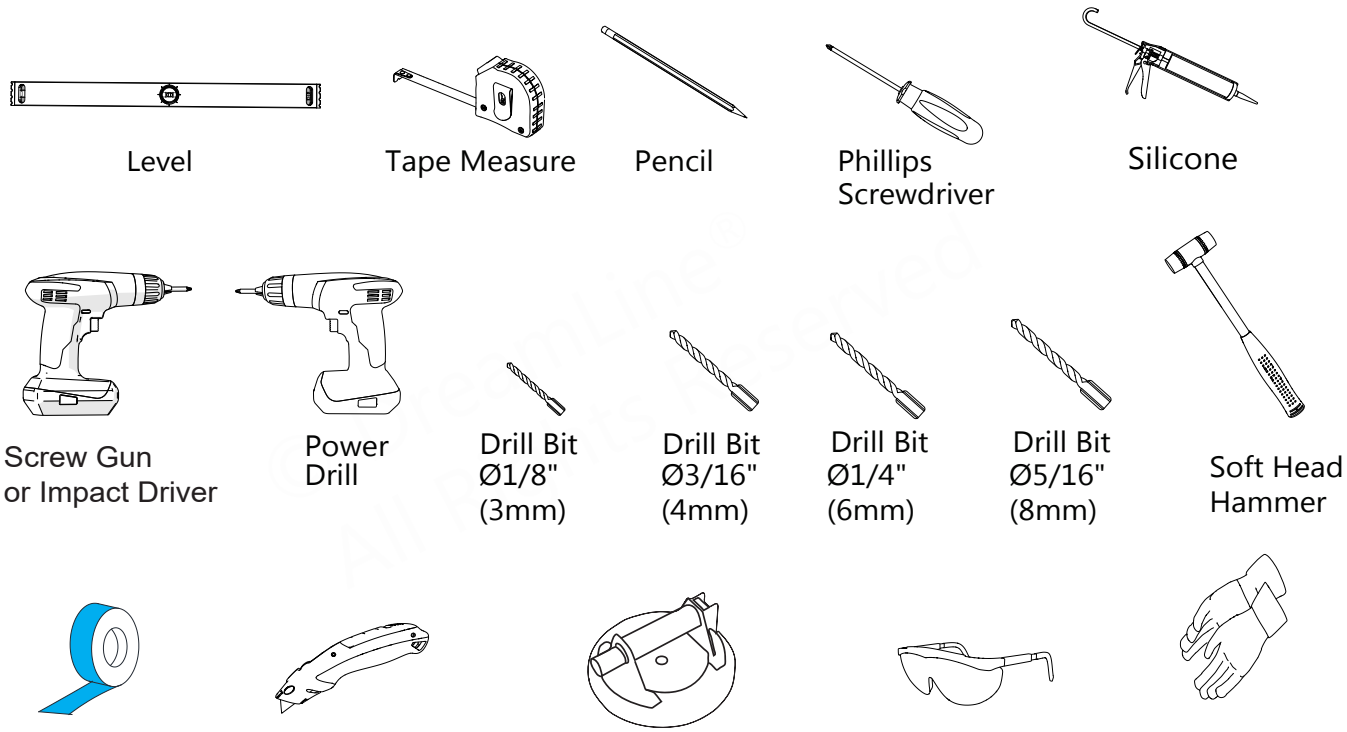

TIP

Verify that the correct model size has been ordered; measure the finished opening **before** proceeding with the installation.

Confirm that the finished walls are plumb and the threshold is level and pitched into the shower area.

Use a good quality waterproof, mildew-resistant 100% silicone caulk.

Cover the shower/tub drain with tape prior to installation to prevent the loss of screws or small parts.

NOTE

Unpack your unit carefully and inspect it. Lay it out and identify all parts using the **Detailed Diagram** on page **7**; and packing list in this manual as a reference. Before discarding the carton, check for small hardware bags that may have fallen to the bottom of the box. If any parts are damaged or missing, please contact DreamLine® for replacement. The shipping boxes may contain extra parts not used in your model configuration.
Retain these installation instructions for future reference.

©2025 DreamLine® All Rights Reserved

Configurations

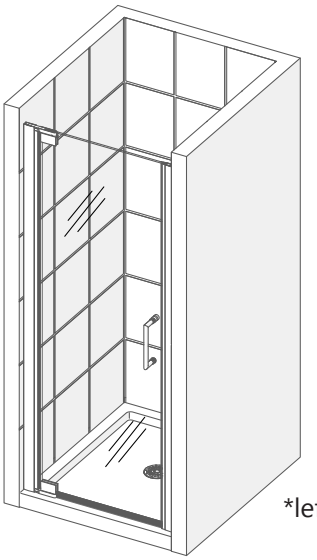

SHDR-4125720-##
SHDR-4127720-##
SHDR-4128720-##
SHDR-4130720-##
SHDR-4132720-##
SHDR-4134720-##
SHDR-4135720-##

*left-swing door installation shown

ELEGANCE
Single Door

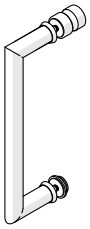

Single-sided handle

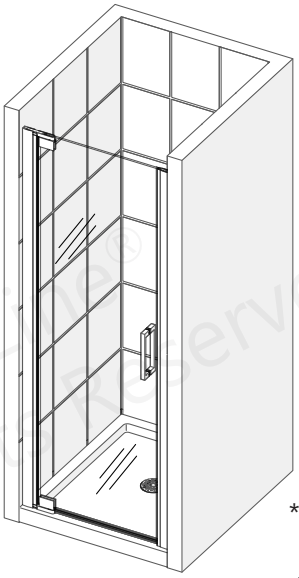

SHDR-4325000-##
SHDR-4327000-##
SHDR-4328000-##
SHDR-4330000-##
SHDR-4332000-##
SHDR-4334000-##
SHDR-4335000-##

*left-swing door installation shown

ELEGANCE LS
Single Door

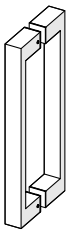

Double-sided handle

Elegance and Elegance-LS models are also available with inline panels in various widths. Panels 12" or larger include an L-Bar ™ . See all models at DreamLine.com

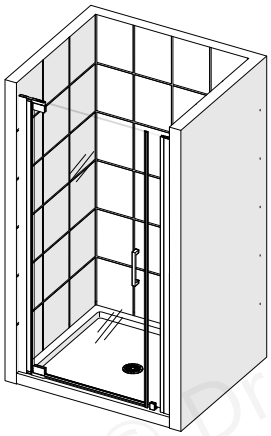

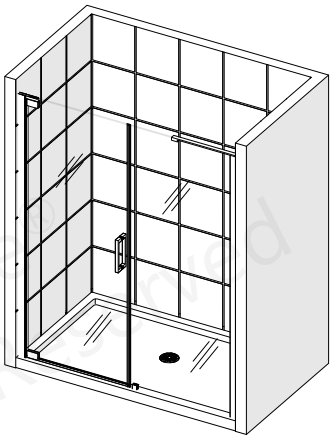

*Left-Swing door installation shown

NOTE

This manual describes the <u>single door</u> installation of the ELEGANCE and ELEGANCE LS models.

For models with additional inline panel glass, **<u>use this manual first</u> to install the door**, and then use the manual packaged with the panel glass to install the panel.

©2025 DreamLine® All Rights Reserved

Two-Part Adjustable Wall Profile System

The Glass Profiles can be adjusted up to 1" within the Wall Profiles for overall width or to correct for out-of-plumb conditions within the model size. Screw them together only after making final adjustments.

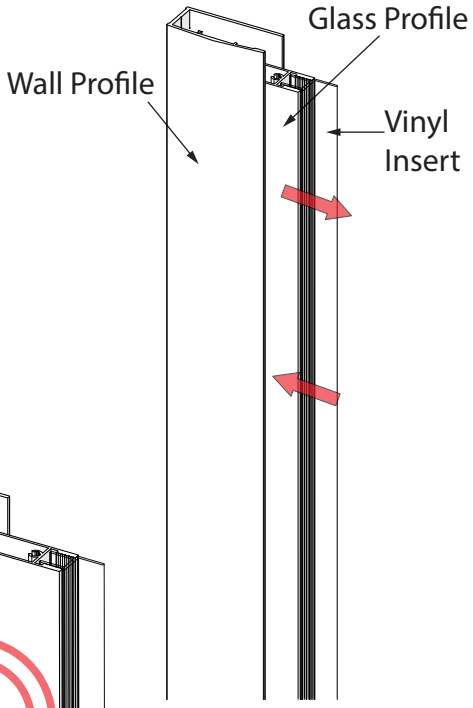

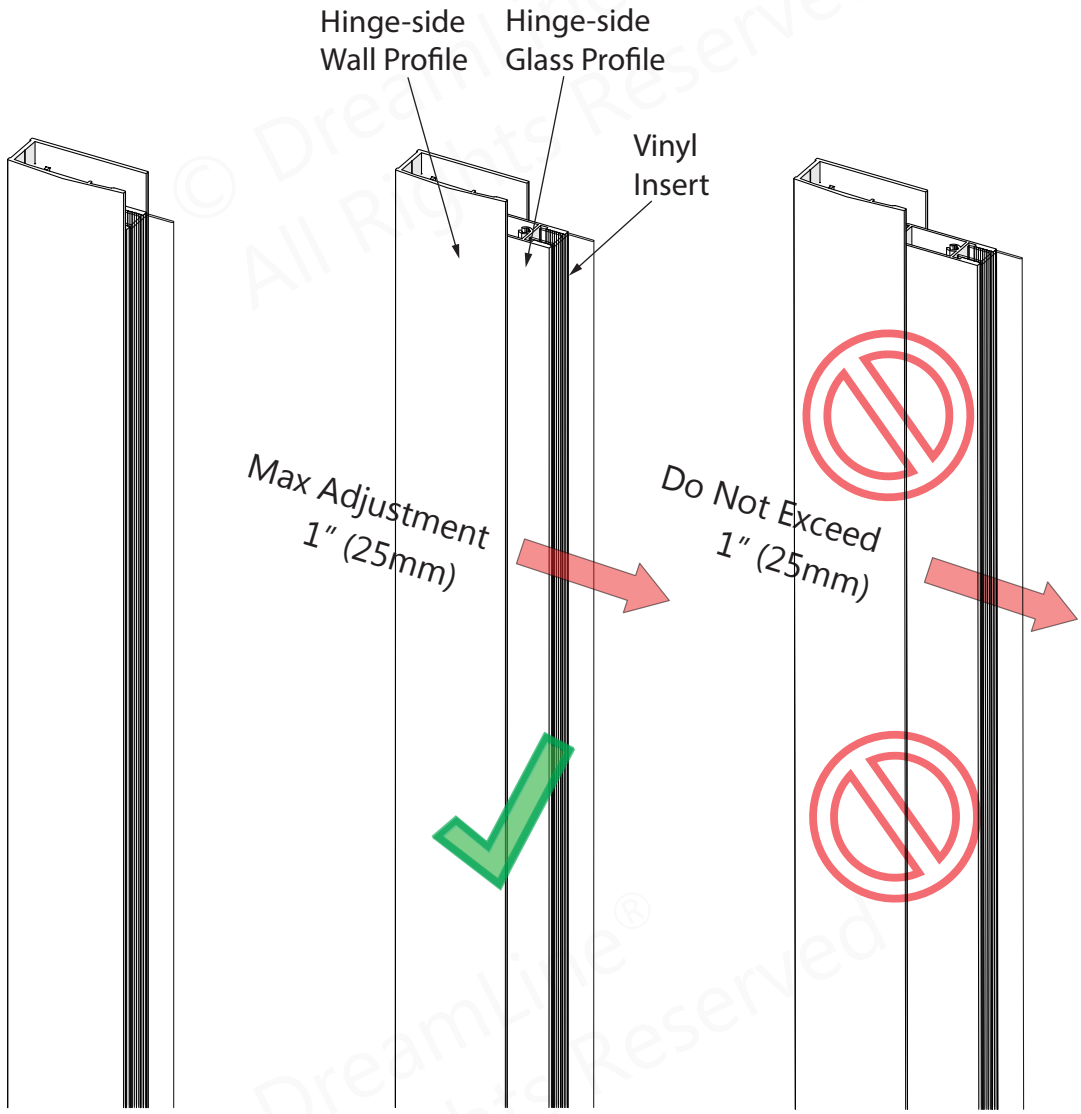

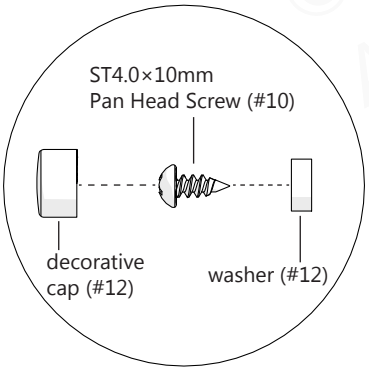

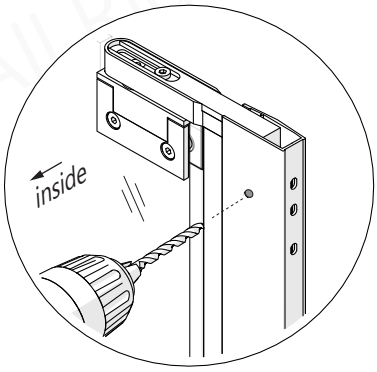

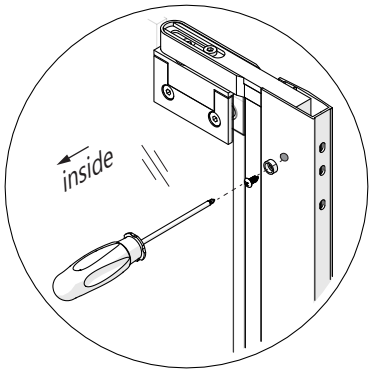

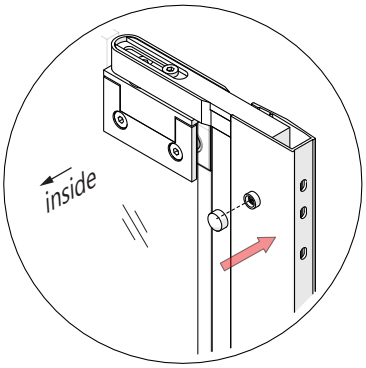

©2025 DreamLine® All Rights Reserved

Detailed Diagram of Elegance Shower Door Components

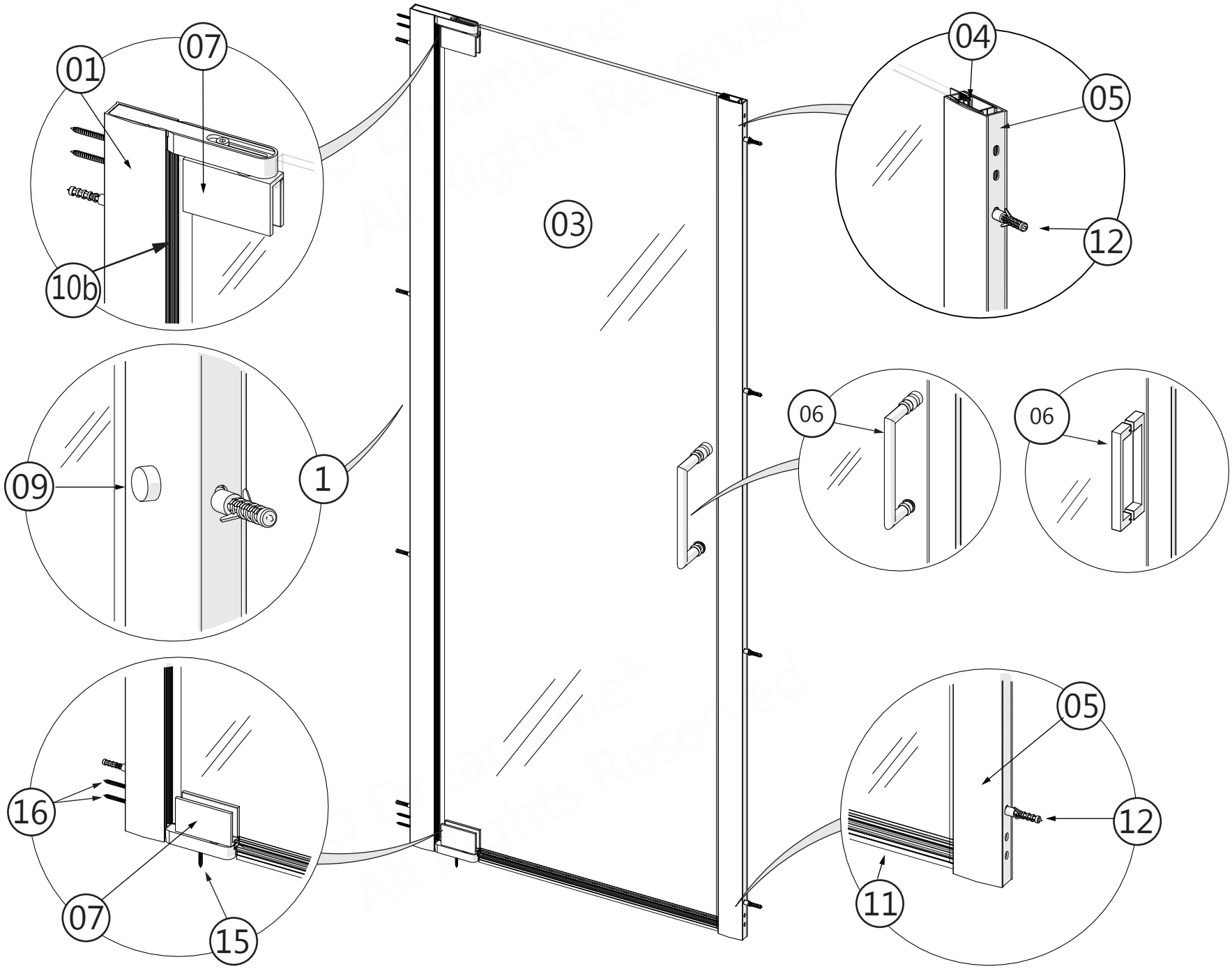

©2025 DreamLine® All Rights Reserved

Parts List

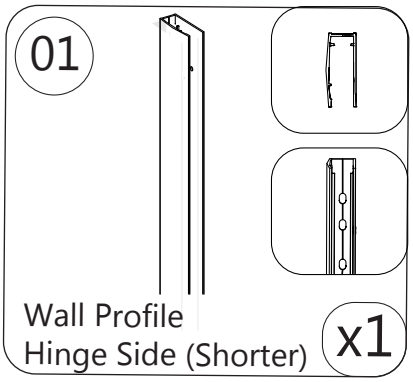

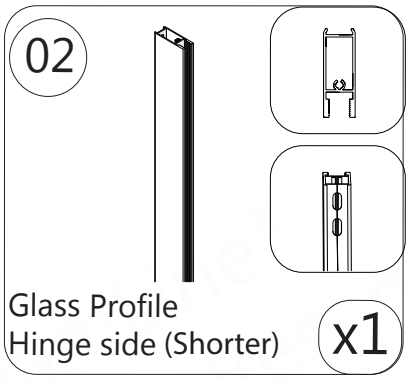

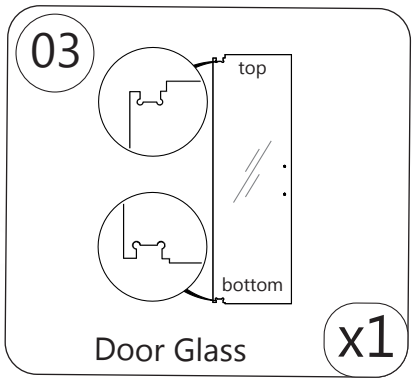

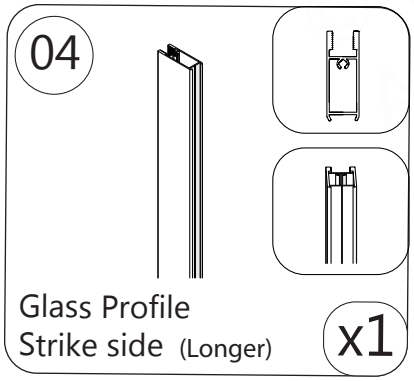

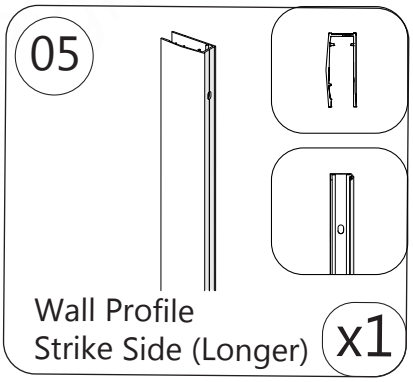

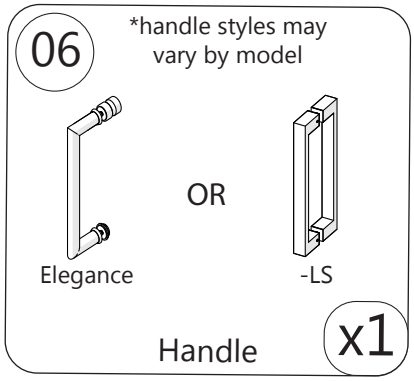

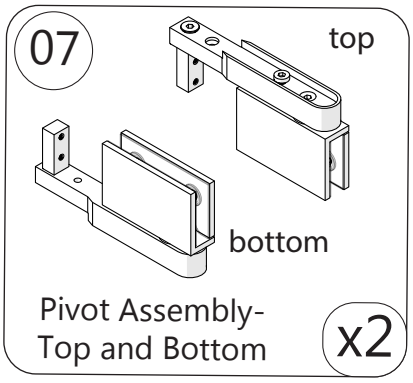

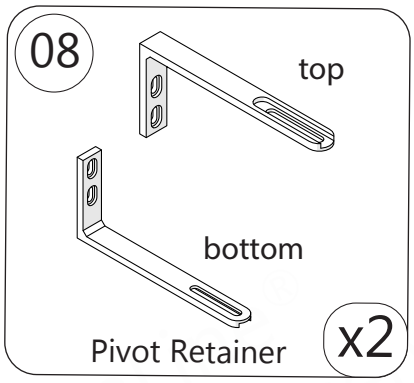

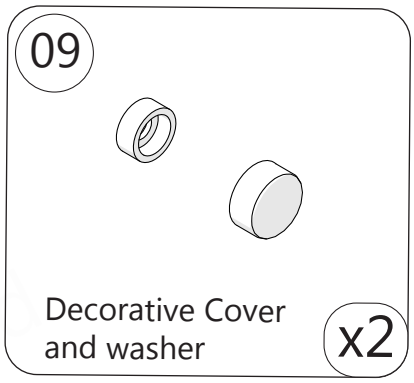

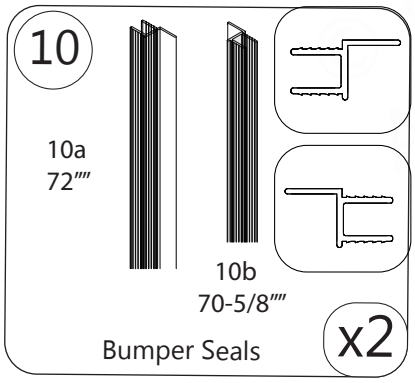

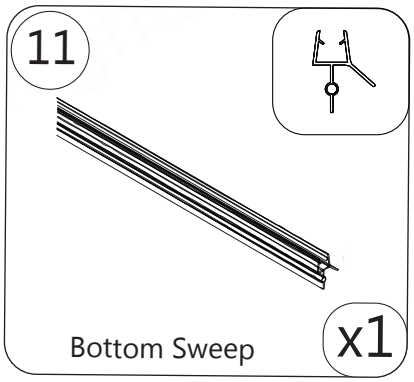

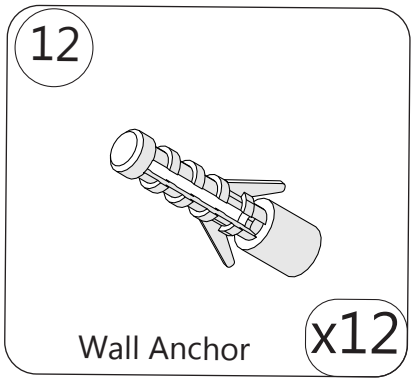

©2025 DreamLine® All Rights Reserved

Parts List

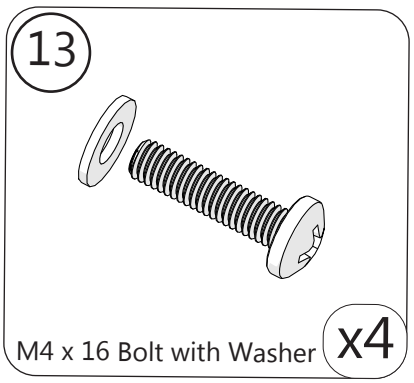

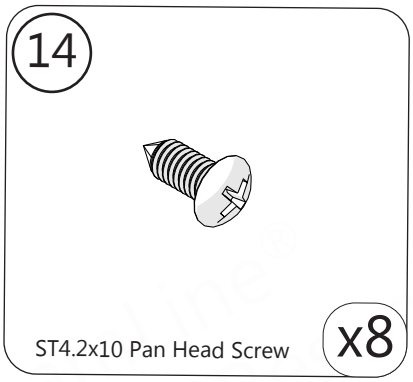

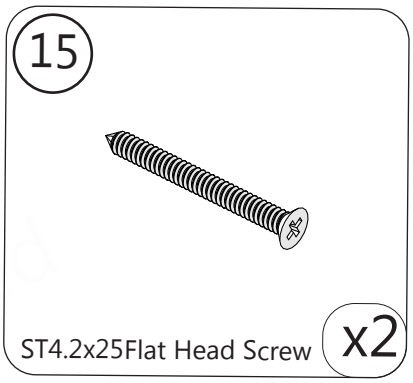

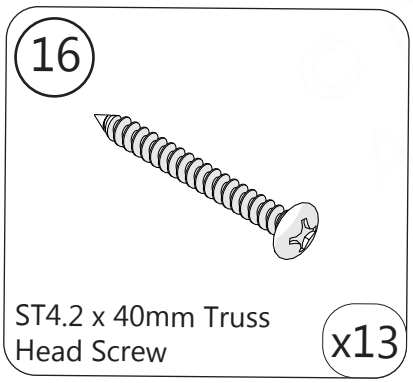

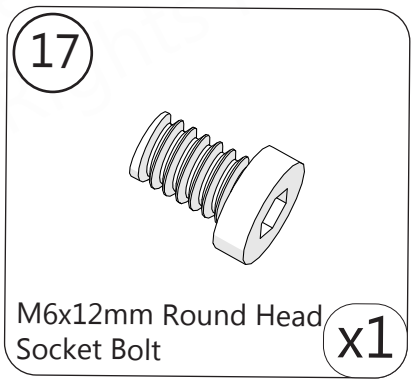

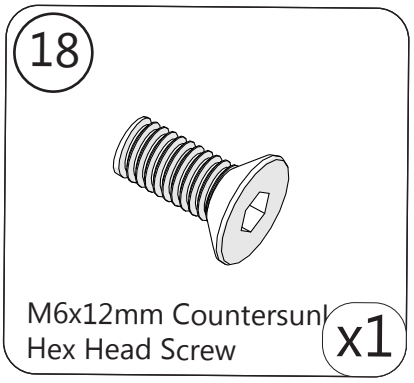

It is not necessary to fully disassemble the Pivot Assemblies for installation.

The Pivot Assemblies are paired and either one can be used as the top or bottom pivot depending on the handing of the door installation. See note* below.

Parts per Pivot Assembly-A

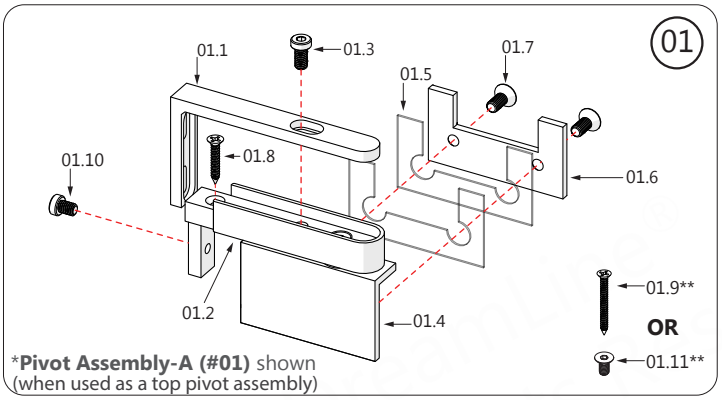

***Pivot Assembly-A (#01)** shown
(when used as a top pivot assembly)

Pivot Assembly A		
ITEM #	**ITEM DESCRIPTION**	**QTY**
01.1	Pivot Retainer	1 pc
01.2	Pivot Bracket	1 pc
01.3*	M6 x 12 Socket Head Hex Screw	1 pc
01.4	Pivot Body	1 set
01.5	Clear Gasket	2 pcs
01.6	Back Plate	1 pc
01.7	M6 x 14 Countersunk Hex Screw	2 pcs
01.8	ST4.2×25mm Countersunk Screw	1pc
01.9	ST4.2 x 40 Countersunk Screw	1 pc
01.10**	M6×12 Hex Socket Head Cap Screw	1 pc
01.11**	M6×12 Countersunk Hex Head Screw	1 pc

NOTE

- *When used as a top pivot assembly: use screw / item #01.3/02.3
- **When used as a bottom pivot assembly: use either screw / item #01.10/02.10 or #01.11/02.11

Parts per Pivot Assembly-B

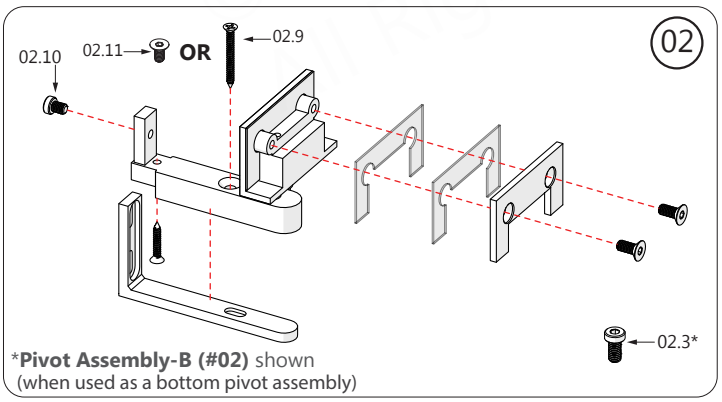

***Pivot Assembly-B (#02)** shown
(when used as a bottom pivot assembly)

Pivot Assembly B		
ITEM #	**ITEM DESCRIPTION**	**QTY**
02.1	Pivot Retainer	1 pc
02.2	Pivot Bracket	1 pc
02.3*	M6 x 12 Socket Head Hex Screw	1 pc
02.4	Pivot Body	1 set
02.5	Clear Gasket	2 pcs
02.6	Back Plate	1 pc
02.7	M6 x 14 Countersunk Hex Screw	2 pcs
02.8	ST4.2×25mm Countersunk Screw	1pc
02.9	ST4.2 x 40 Countersunk Screw	1 pc
02.10**	M6×12 Hex Socket Head Cap Screw	1 pc
02.11**	M6×12 Countersunk Hex Head Screw	1 pc

©2025 DreamLine® All Rights Reserved

1

Installation Steps

Glass Profile Height Difference

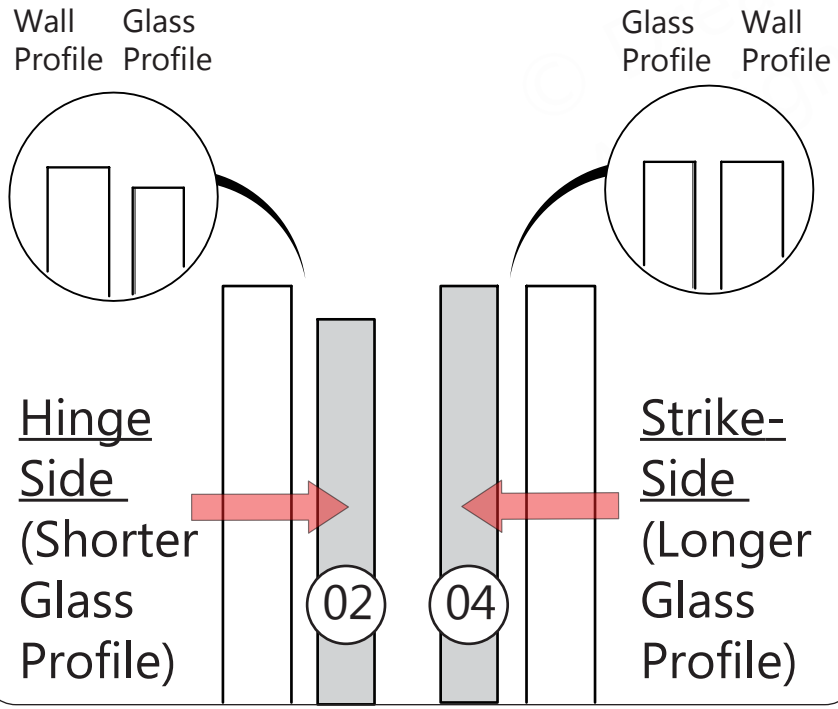

NOTE

- **<u>If a stud is present behind the wall</u>**:
  drill a **Ø3/16"(4mm)** hole up to the stud, drill an **Ø1/8"(3mm)** pilot hole and use the **Large Truss Head Screw ST4.2 x 40 (#16)**

OR

- **<u>If no stud is present behind the wall</u>**:
  drill a **Ø5/16"(7mm)** hole and insert the **Wall Anchors (#12)** and use the **Large Truss Head Screw ST4.2 x 40 (#16)**

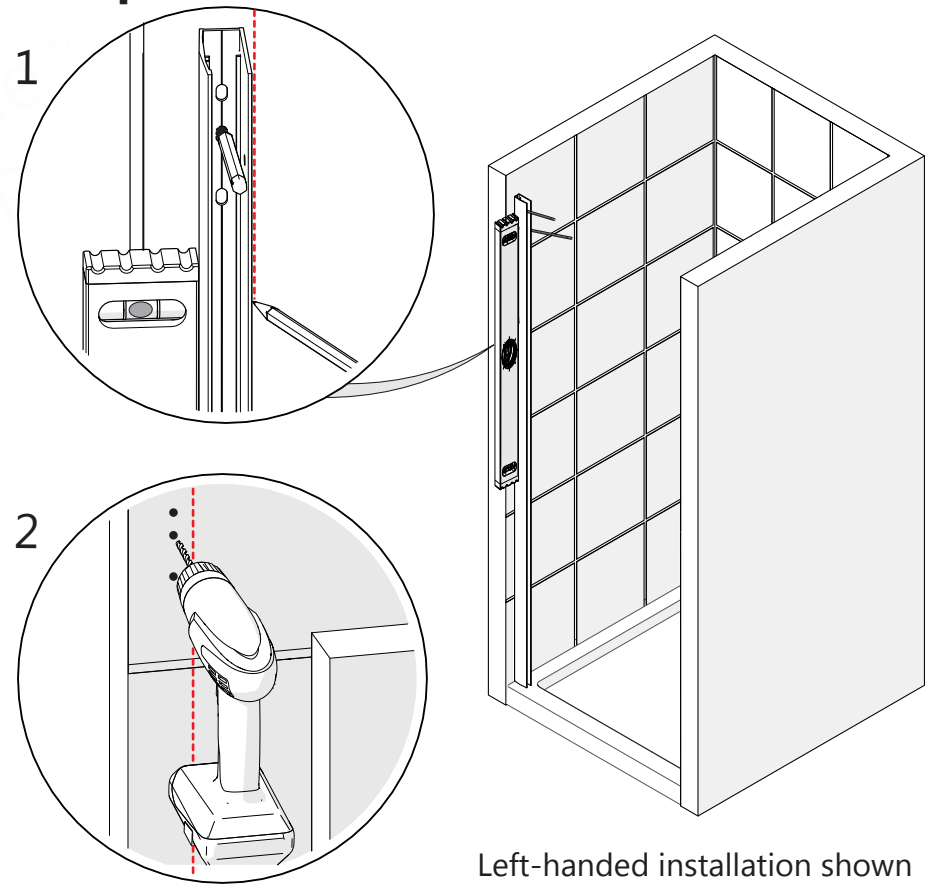

Left-handed installation shown

Fig 1

Parts Needed

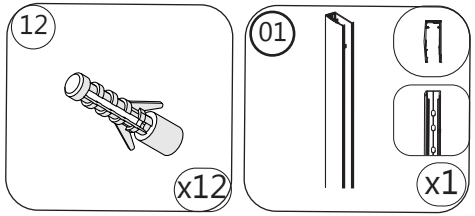

Tools Needed

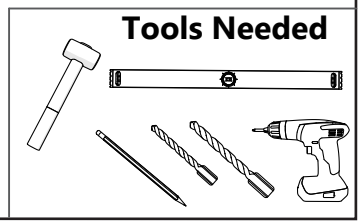

©2025 DreamLine® All Rights Reserved

2

Fig 2a

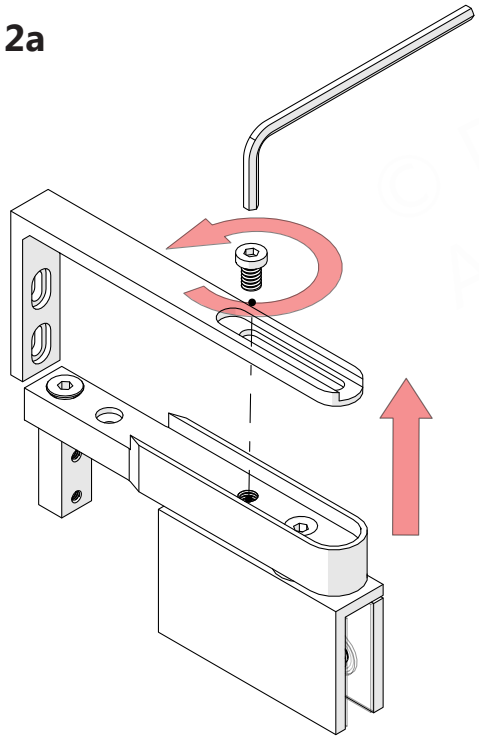

Pivot Assembly-Top (#07) as viewed from outside

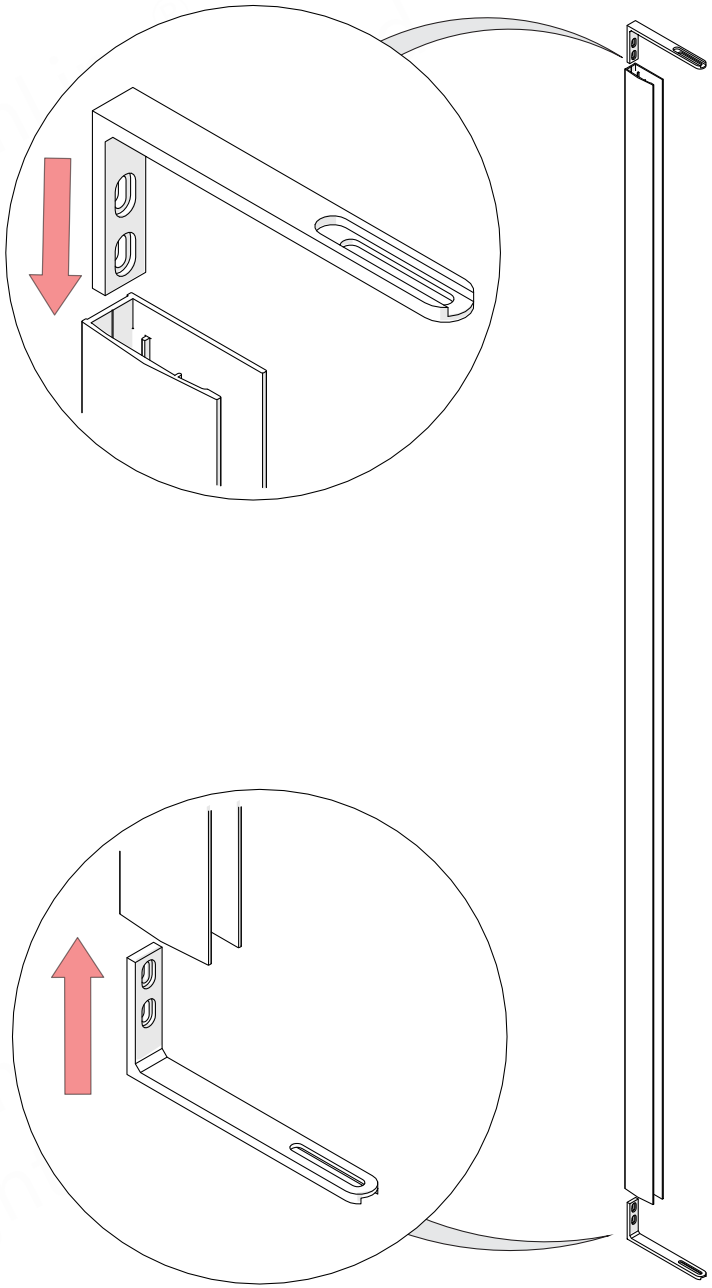

Fig 2b

Parts Needed

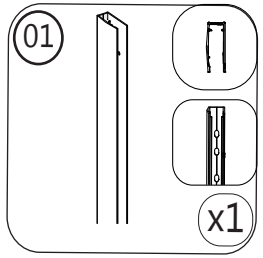

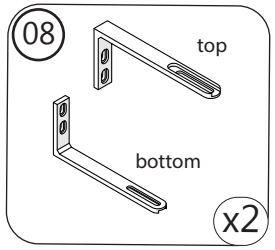

Tools Needed

©2025 DreamLine® All Rights Reserved

3

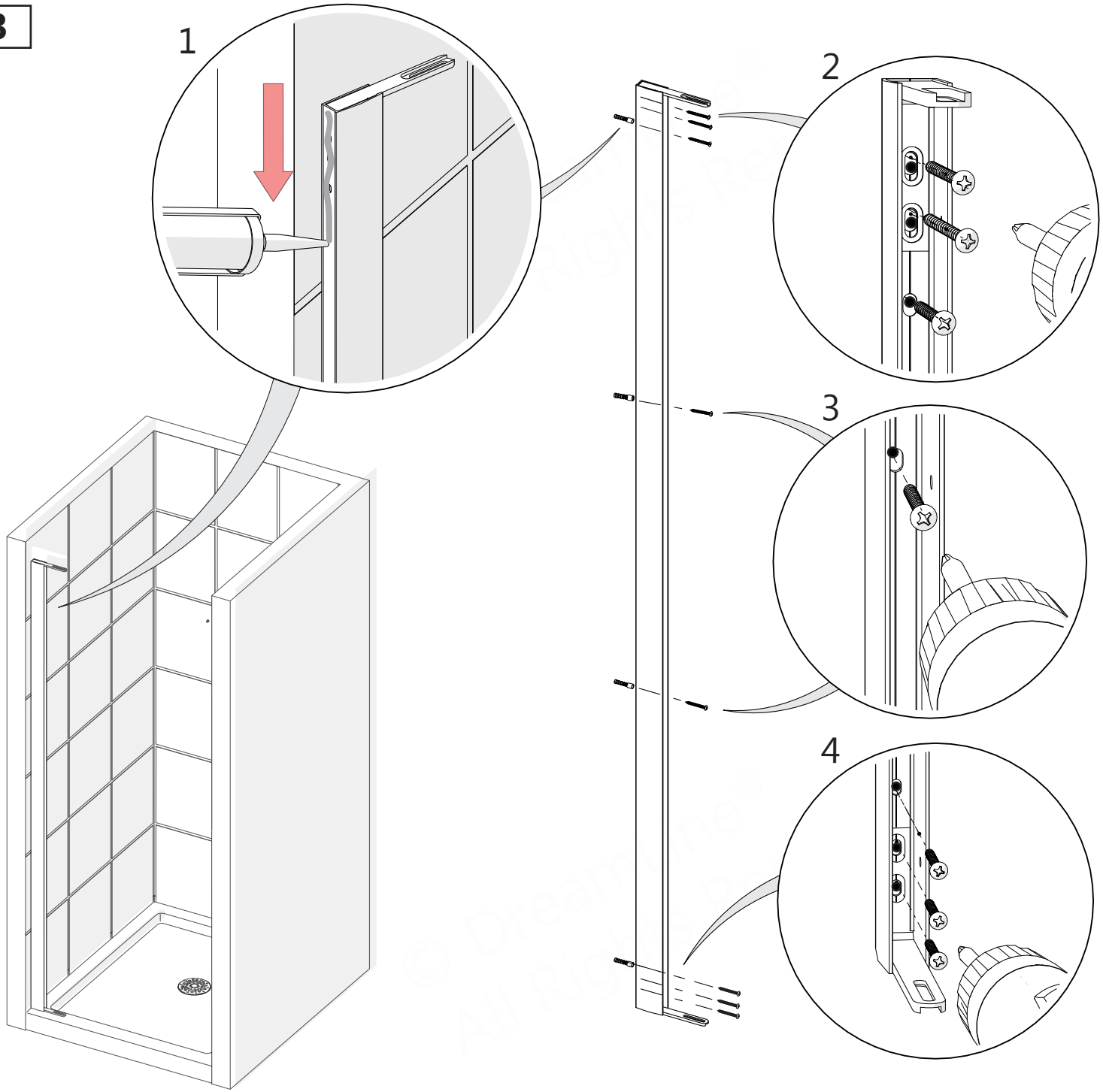

Fig 3

Parts Needed

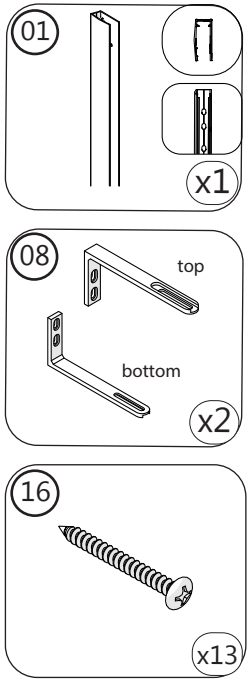

Tools Needed

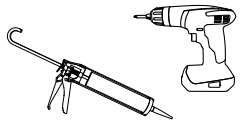

©2025 DreamLine® All Rights Reserved

4

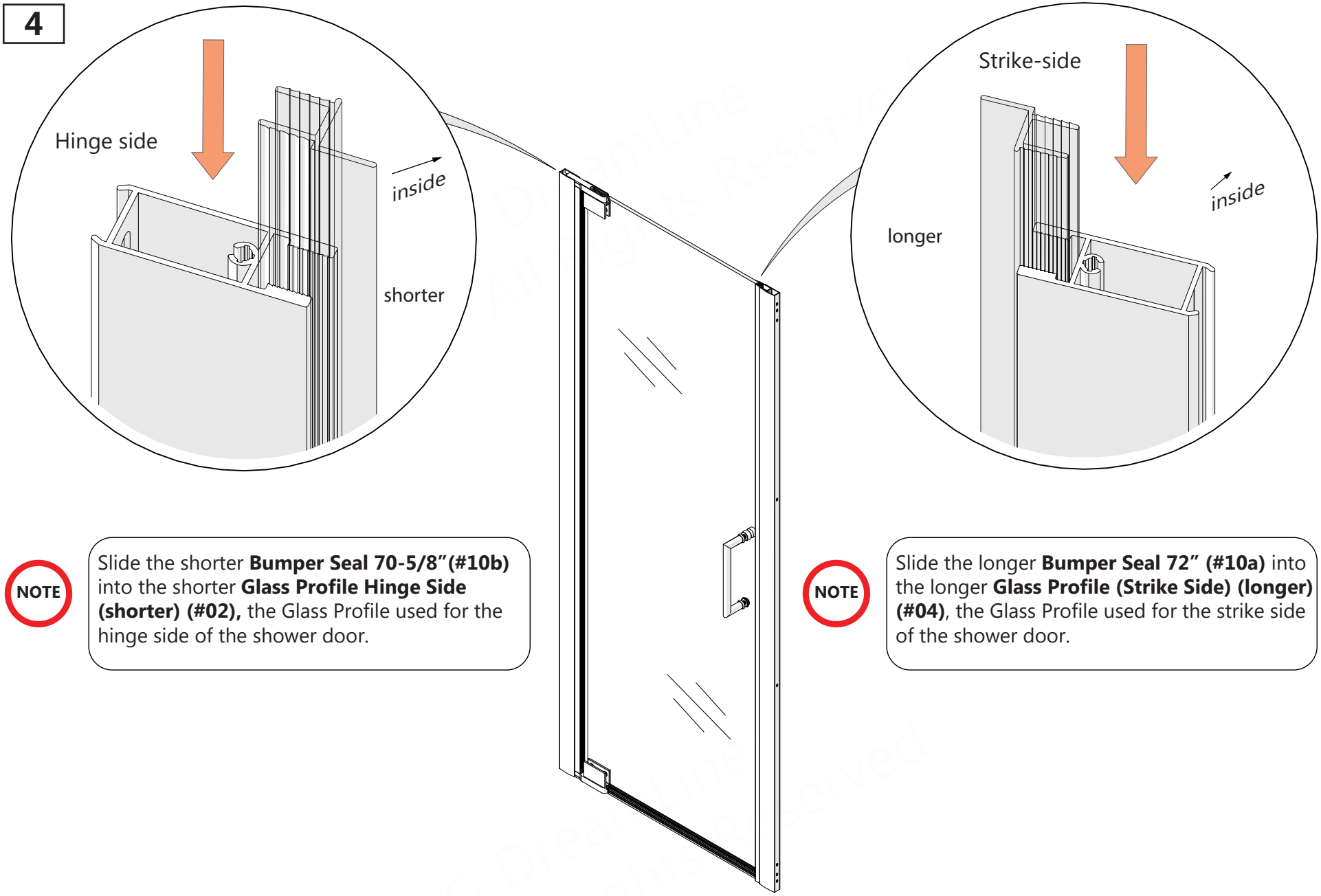

NOTE

Slide the shorter **Bumper Seal 70-5/8"(#10b)** into the shorter **Glass Profile Hinge Side (shorter) (#02),** the Glass Profile used for the hinge side of the shower door.

NOTE

Slide the longer **Bumper Seal 72" (#10a)** into the longer **Glass Profile (Strike Side) (longer) (#04)**, the Glass Profile used for the strike side of the shower door.

Fig 4

left-swing door installation shown

©2025 DreamLine® All Rights Reserved

5

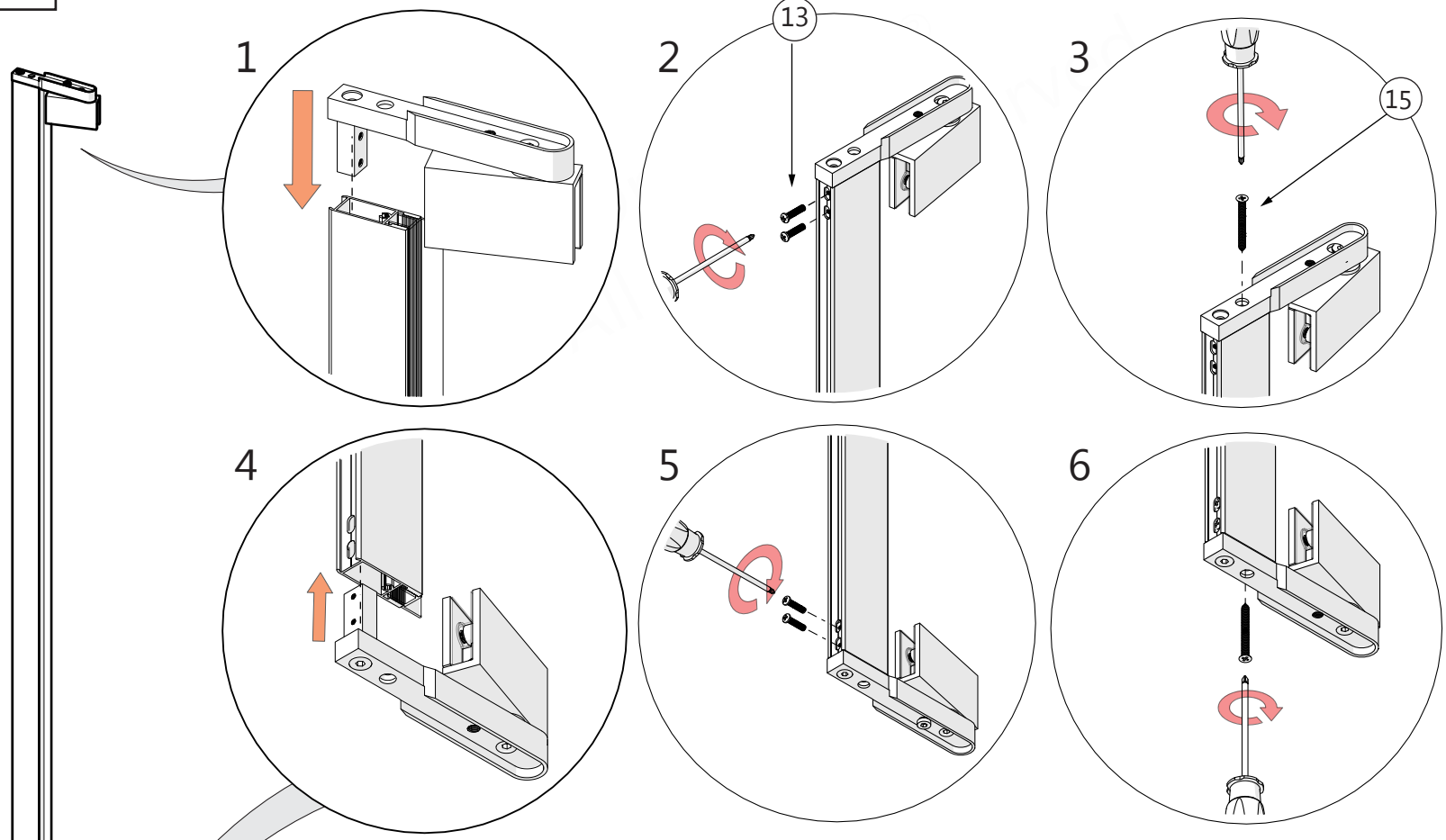

Fig 5

*left-swing door installation shown

NOTE Attach the Pivot Assemblies (#07) to the **Glass Profile Hinge Side (Shorter) (#02)** as shown in **Fig 5.** The back of the **Pivot Assembly** and the bolts **face the inside** of the shower.

NOTE The **Glass Profile Hinge Side (#02)** is the shorter of the two Glass Profiles.

Parts Needed

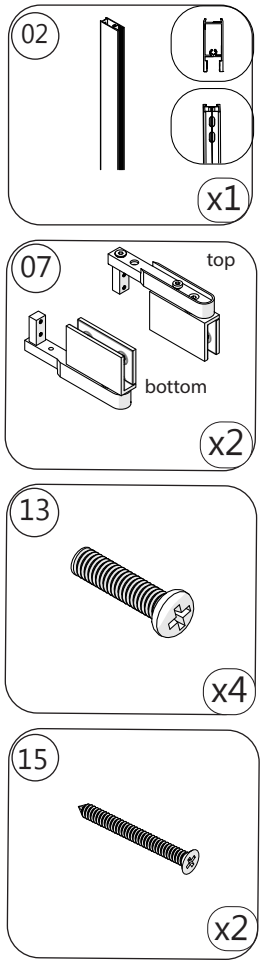

Tools Needed

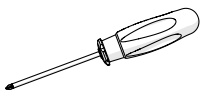

©2025 DreamLine® All Rights Reserved

6

Protect the edges of the door glass from making contact with the walls and threshold during installation and adjustment.

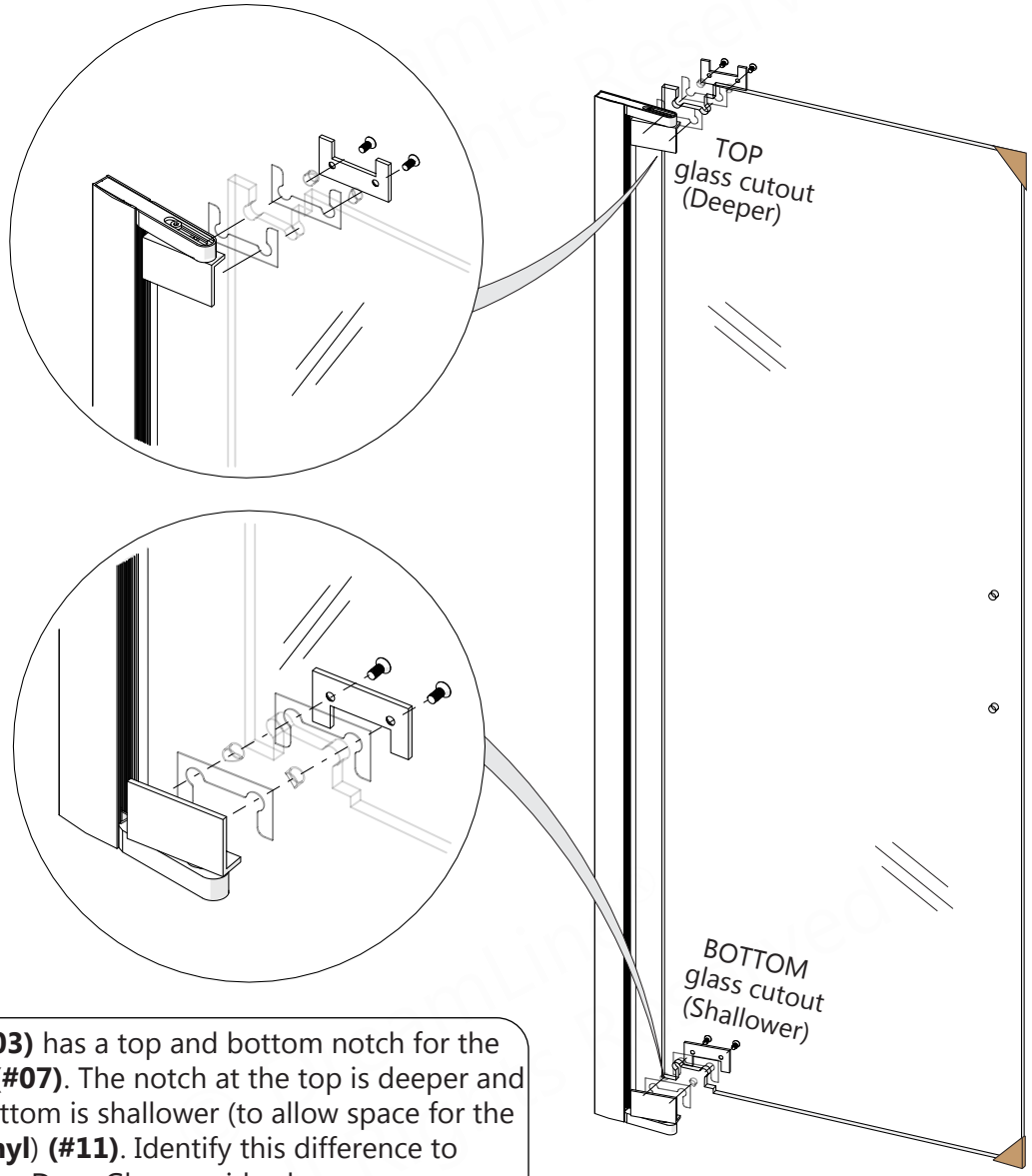

Leave the corner protectors on the glass until it is necessary to remove them.

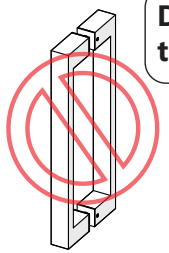

Do Not install the handle yet.

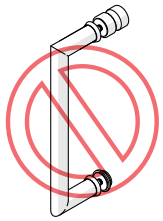

The **Door Glass (#03)** has a top and bottom notch for the **Pivot Assemblies (#07)**. The notch at the top is deeper and the notch at the bottom is shallower (to allow space for the **Bottom Sweep Vinyl**) **(#11)**. Identify this difference to prevent installing the Door Glass upside-down.

Use caution when handling the Door Glass (#03). <u>DO NOT</u> lift the Door Glass with the Handle (#06).

Fig 6

left-swing door installation shown

Parts Needed

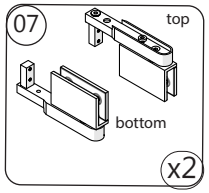

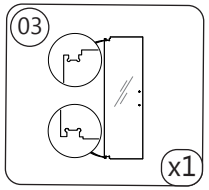

Tools Needed

©2025 DreamLine® All Rights Reserved

7

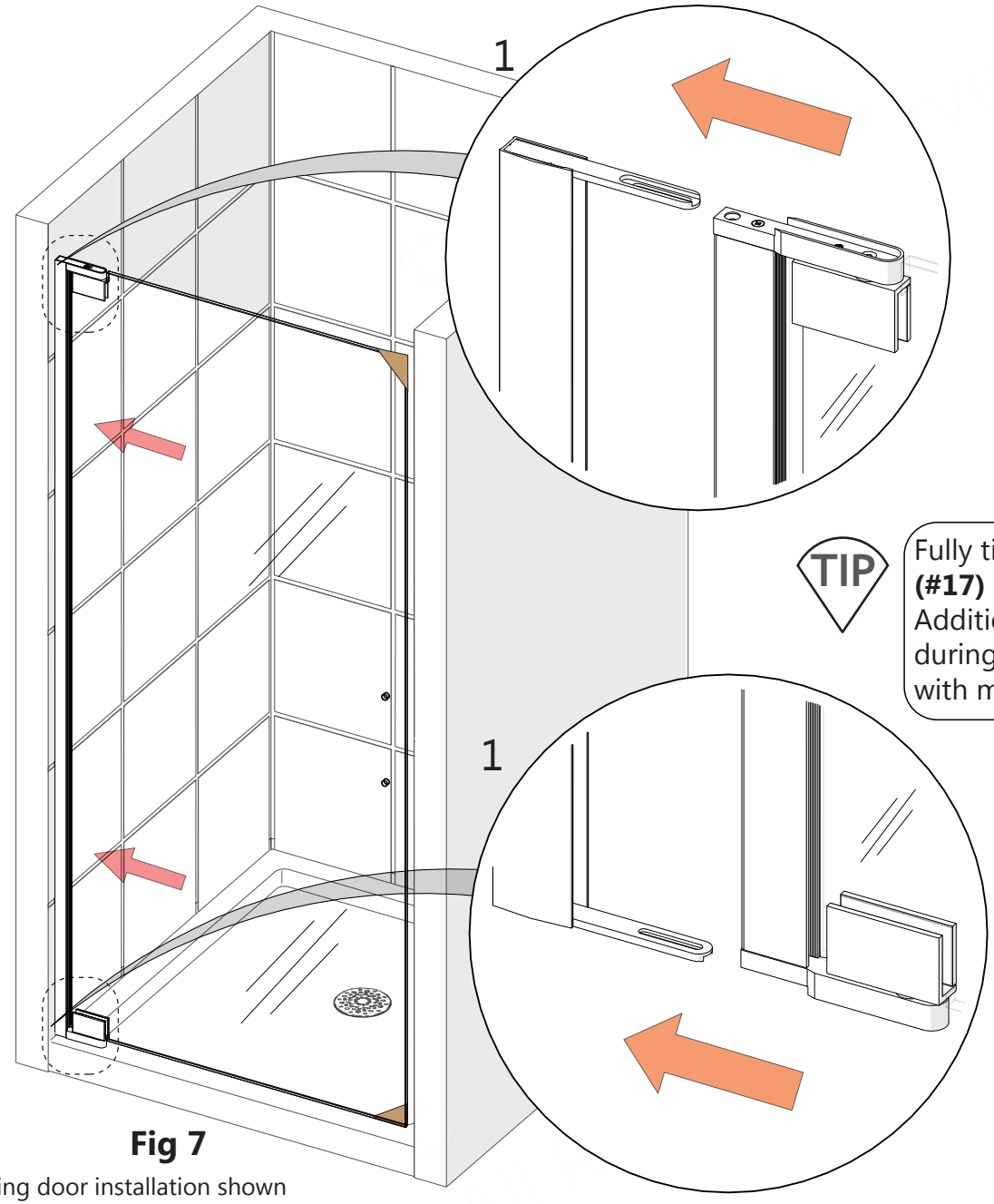

Fig 7

left-swing door installation shown

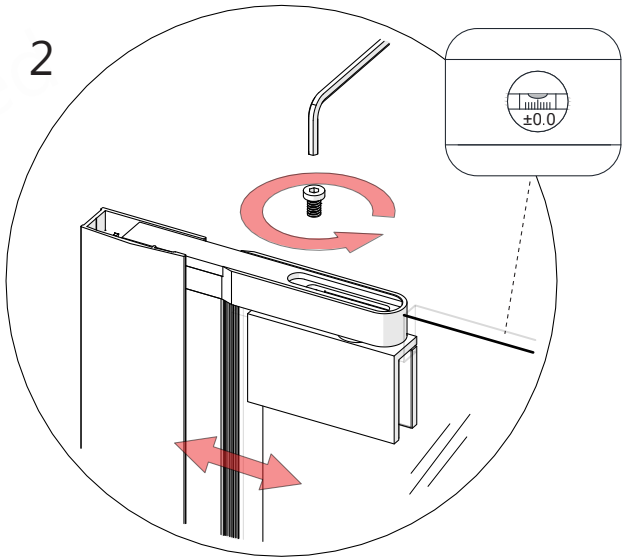

TIP

Fully tighten the **Round Head Socket Bolt M6x12 (#17)** **<u>after</u>** adjusting the door glass to level. Additional overall width adjustment may be necessary during the installation of the strike side profiles or with models that include an inline panel.

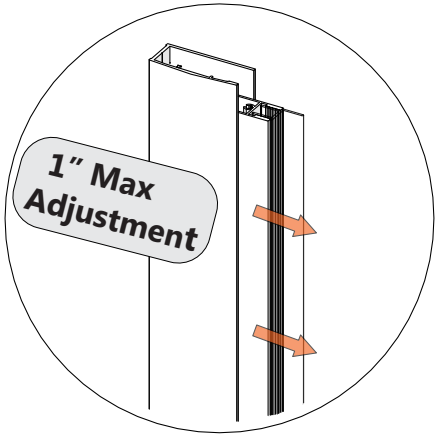

Parts Needed

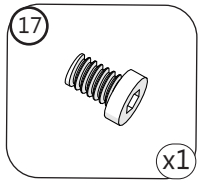

Tools Needed

Each two-piece wall profile system (consisting of the **Glass Profiles (#02/04)** and **Wall Profiles (#01/05)**) will allow for 1" of adjustment for overall width or an out-of-plumb condition within the model size.

©2025 DreamLine® All Rights Reserved

8

Handle Assembly Installation: Elegance

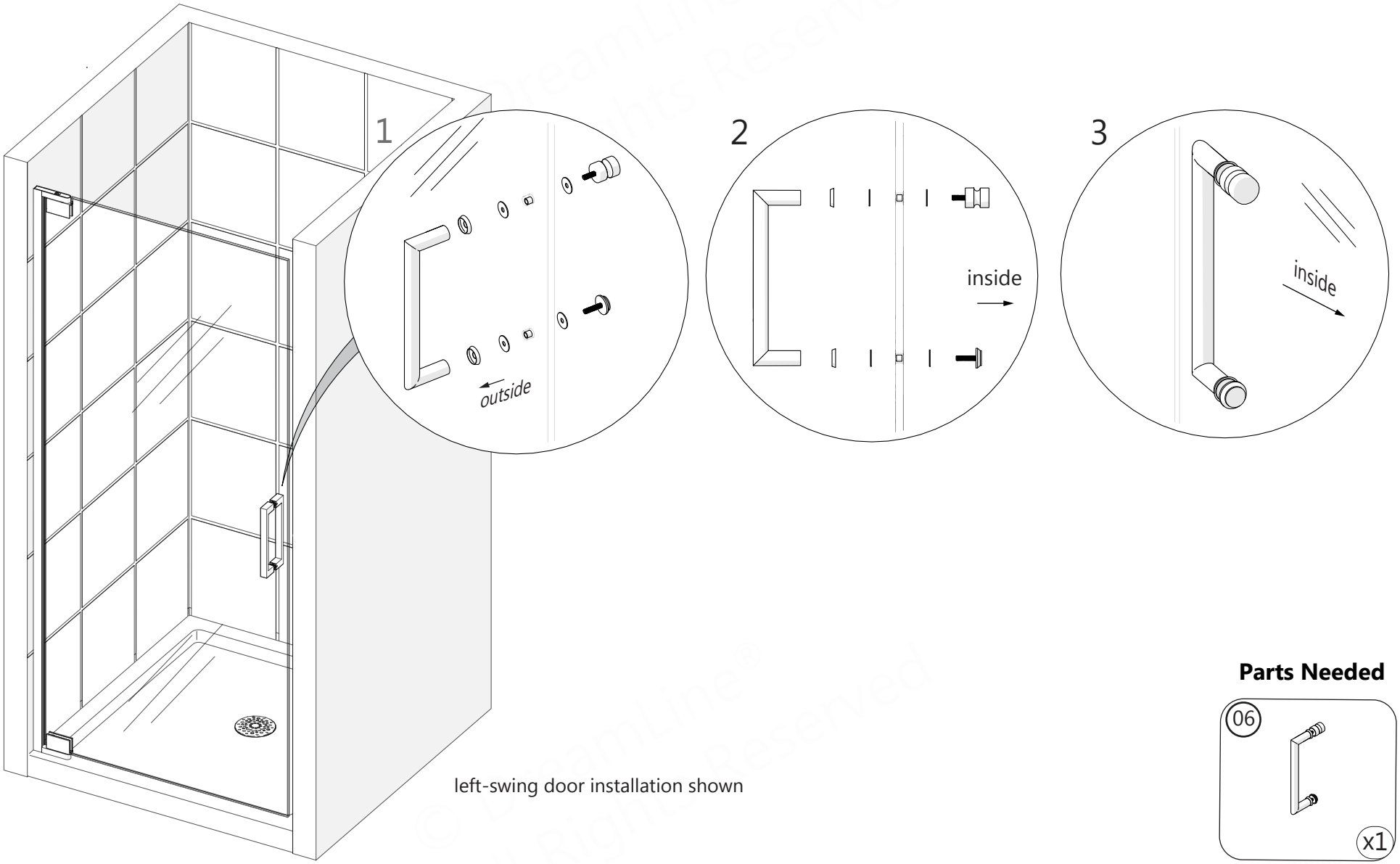

left-swing door installation shown

Fig 8

Parts Needed

Tools Needed

TIP

Tighten both knobs to the **Handle (#06)** to ensure the handle is secured to the **Door Glass (#03)**. (see Fig 7.3)

©2025 DreamLine® All Rights Reserved

8a

Handle Assembly Installation: Elegance-LS

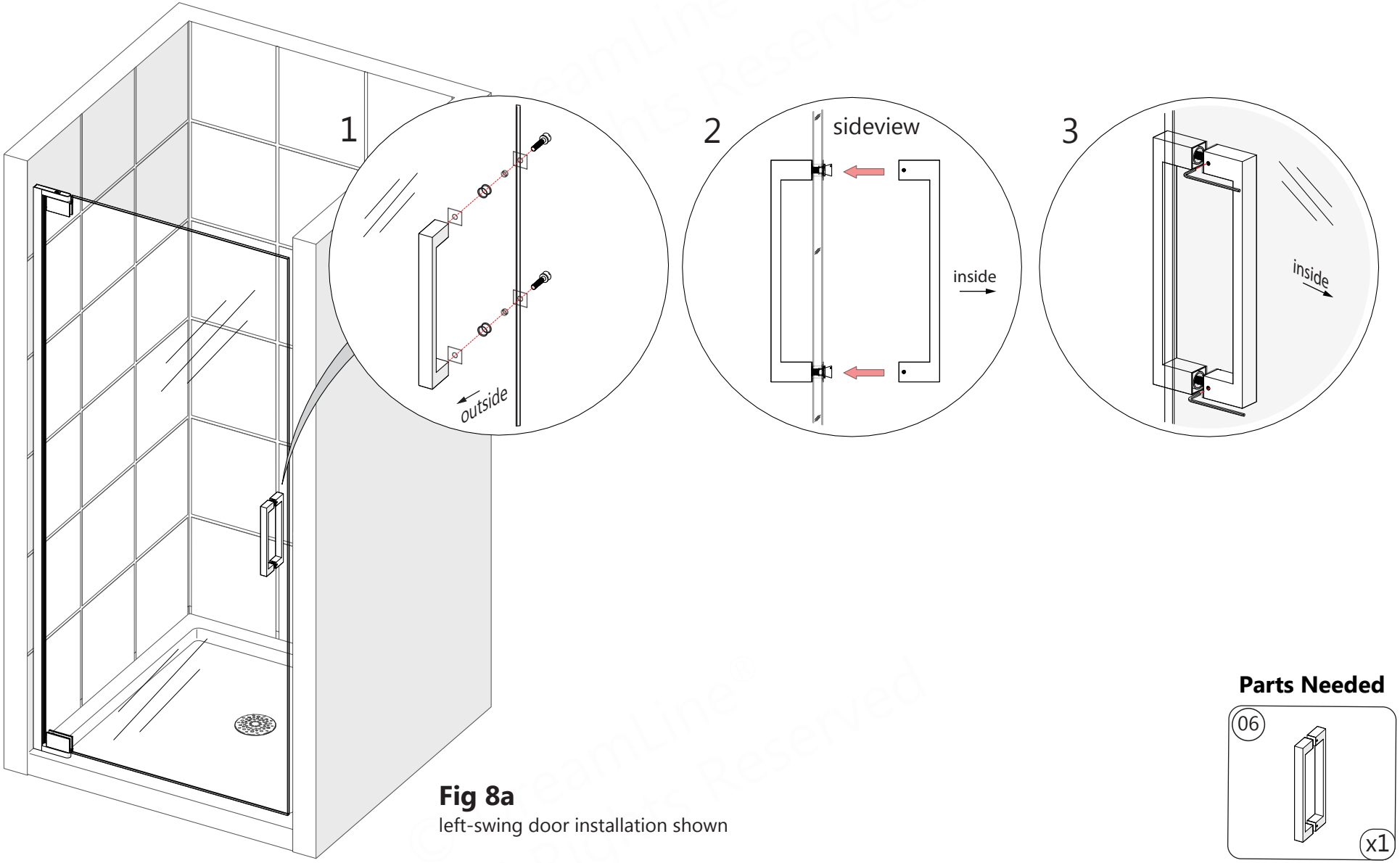

Fig 8a
left-swing door installation shown

Parts Needed

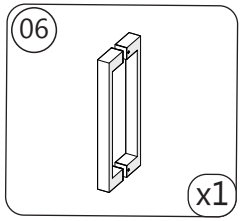

Tools Needed

TIP

Tighten all four **Handle (#06 LS)** set screws to ensure the handle is secured to the **Door Glass (#03)**. (see Fig 7.3)

© DreamLine All Rights Reserved

9

NOTE

Sealing the hole in the bottom **Pivot Assembly (#7)** is important to prevent water leakage.
Screwing the bottom **Pivot Assembly (#7)** to the threshold is optional. **(See page 27 for details)**

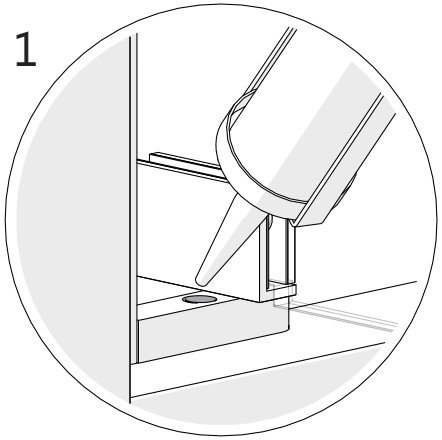

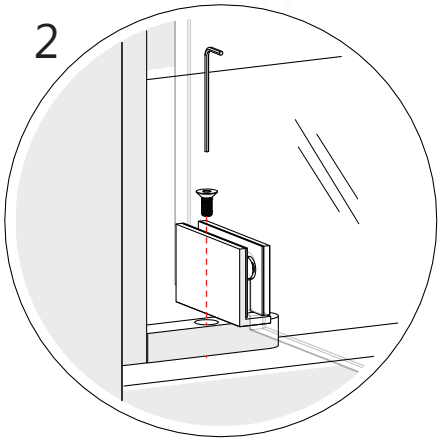

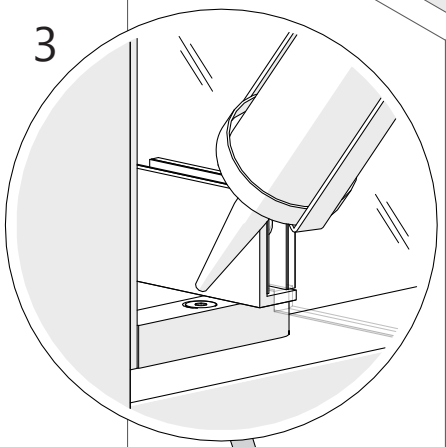

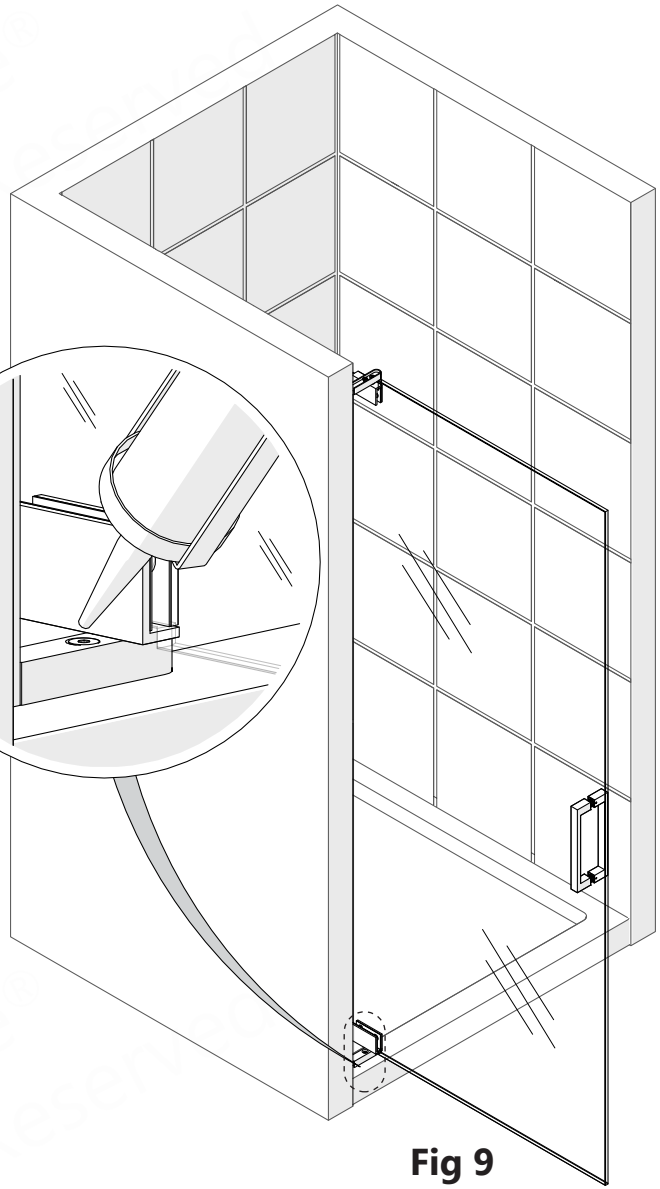

Fig 9

left-swing door installation shown

Parts Needed

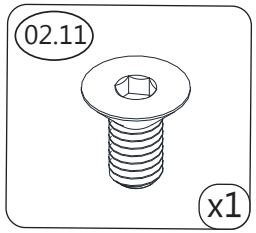

Tools Needed

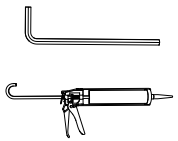

***Any width and/or out-of-plumb adjustments using the adjustable wall profile system must be made prior to screwing the Pivot Assembly (#07) down into the threshold. See Page 27 for specific instructions.**

When installing the door along with an inline panel model, postpone this step until after aligning the panel glass.

©2025 DreamLine® All Rights Reserved

10

Strike Profile Installation

If installing this door along with an inline panel, stop here and refer to the manual that came with the panel glass for further installation instructions. Otherwise, for a single door, continue with Step 10 below.

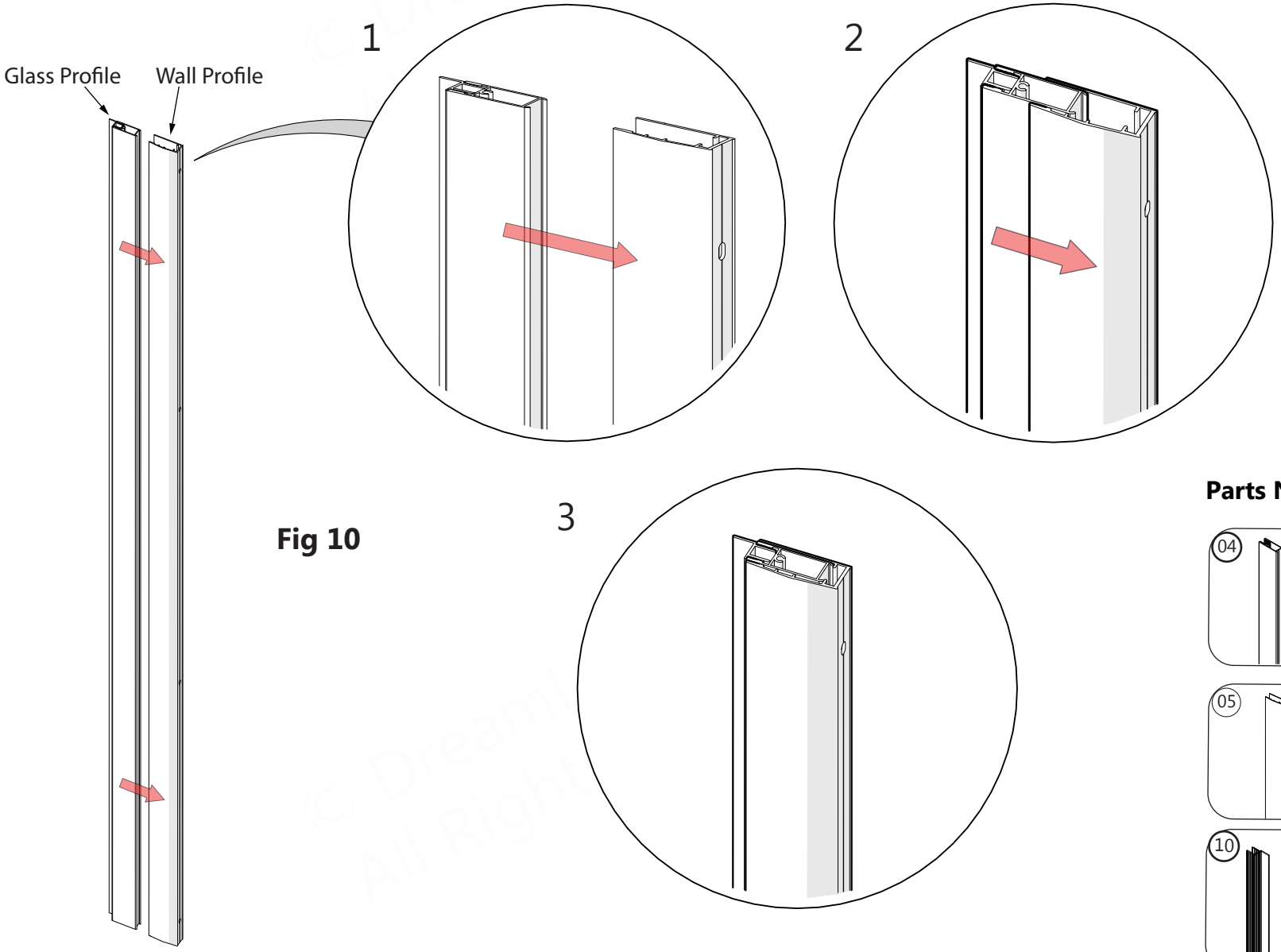

Fig 10

Parts Needed

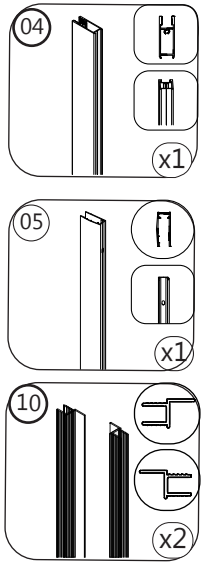

©2025 DreamLine® All Rights Reserved

11

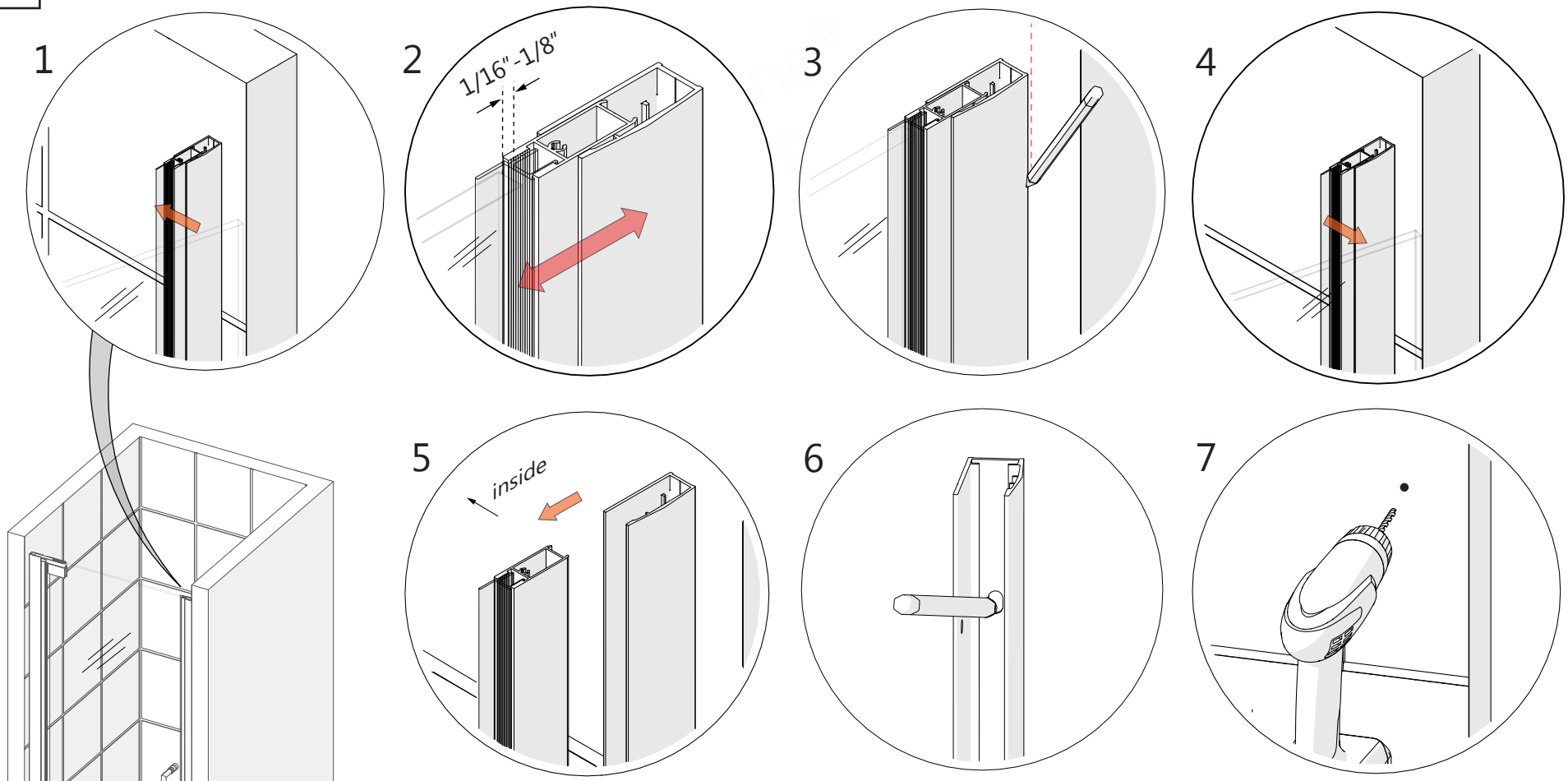

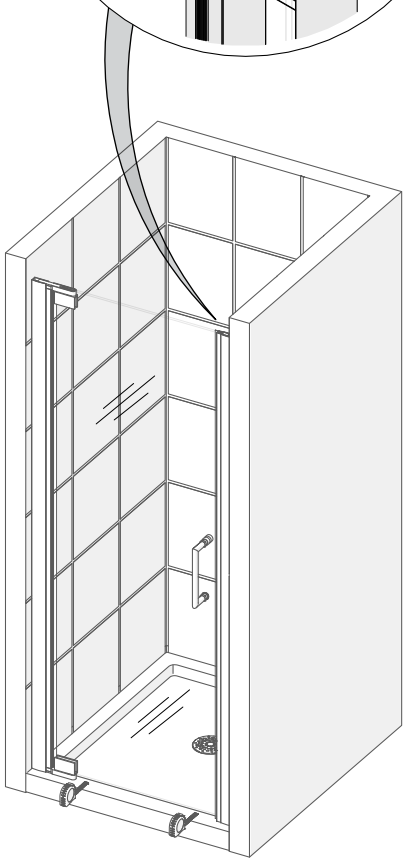

Fig 11

left-swing door installation shown

NOTE

Align the **Strike Profile (#05)** to the **Door Glass (#03)**. Create 1/16" to 1/8" space between the edge of the door glass and the strike vinyl by adjusting the glass profiles. Make sure the door glass makes full contact with the strike vinyl when the door is fully closed. **(Fig 11.1)**

NOTE

- **<u>If a stud is present behind the wall</u>**:
  drill a **Ø3/16"(4mm)** hole up to the stud, drill an **Ø1/8"(3mm)** pilot hole and use the **ST4.0 x 40mm Pan Head Screws (#08)**

OR

- **<u>If no stud is present behind the wall</u>**:
  drill a **Ø5/16"(7mm)** hole and insert the **Wall Anchors (#10)** and use the **ST4.0 x 40mm Pan Head Screws (#08).**

Tools Needed

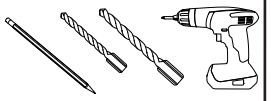

©2025 DreamLine® All Rights Reserved

12

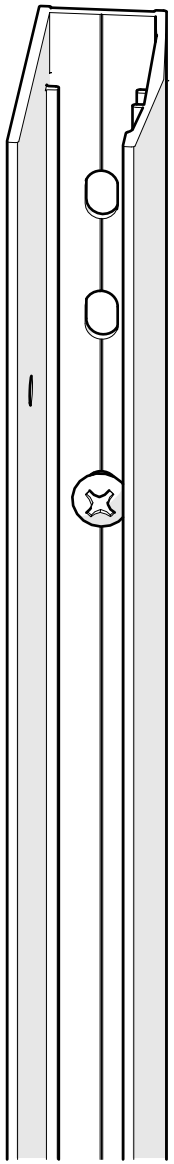

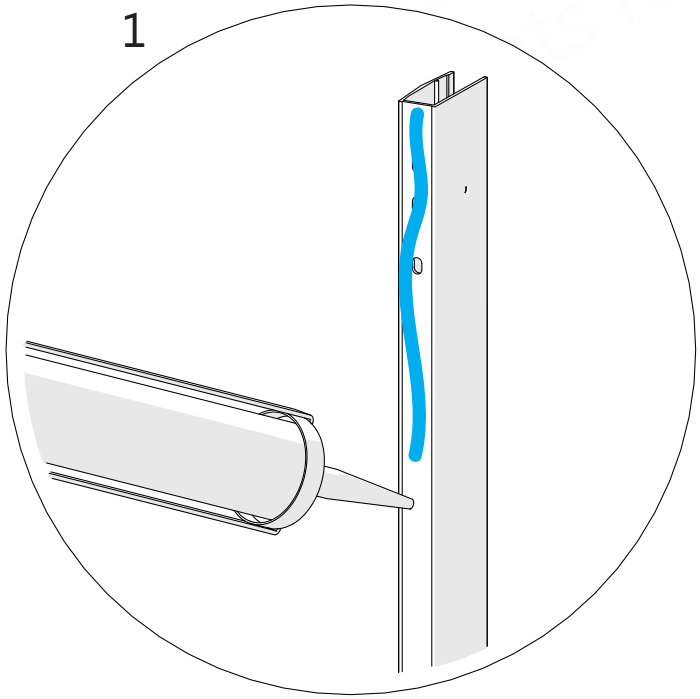

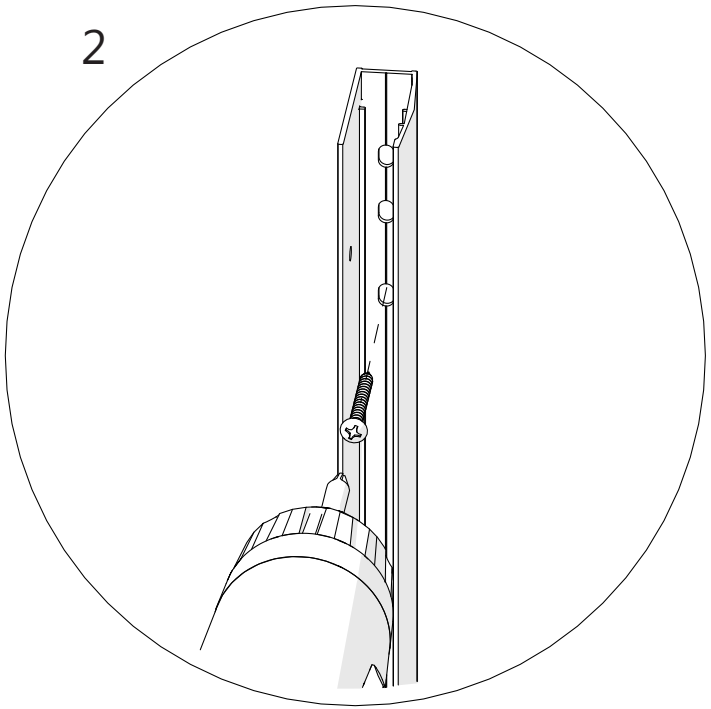

Fig 12

Parts Needed

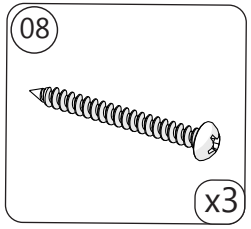

Tools Needed

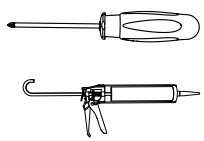

© DreamLine® All Rights Reserved

©2025 DreamLine® All Rights Reserved

13

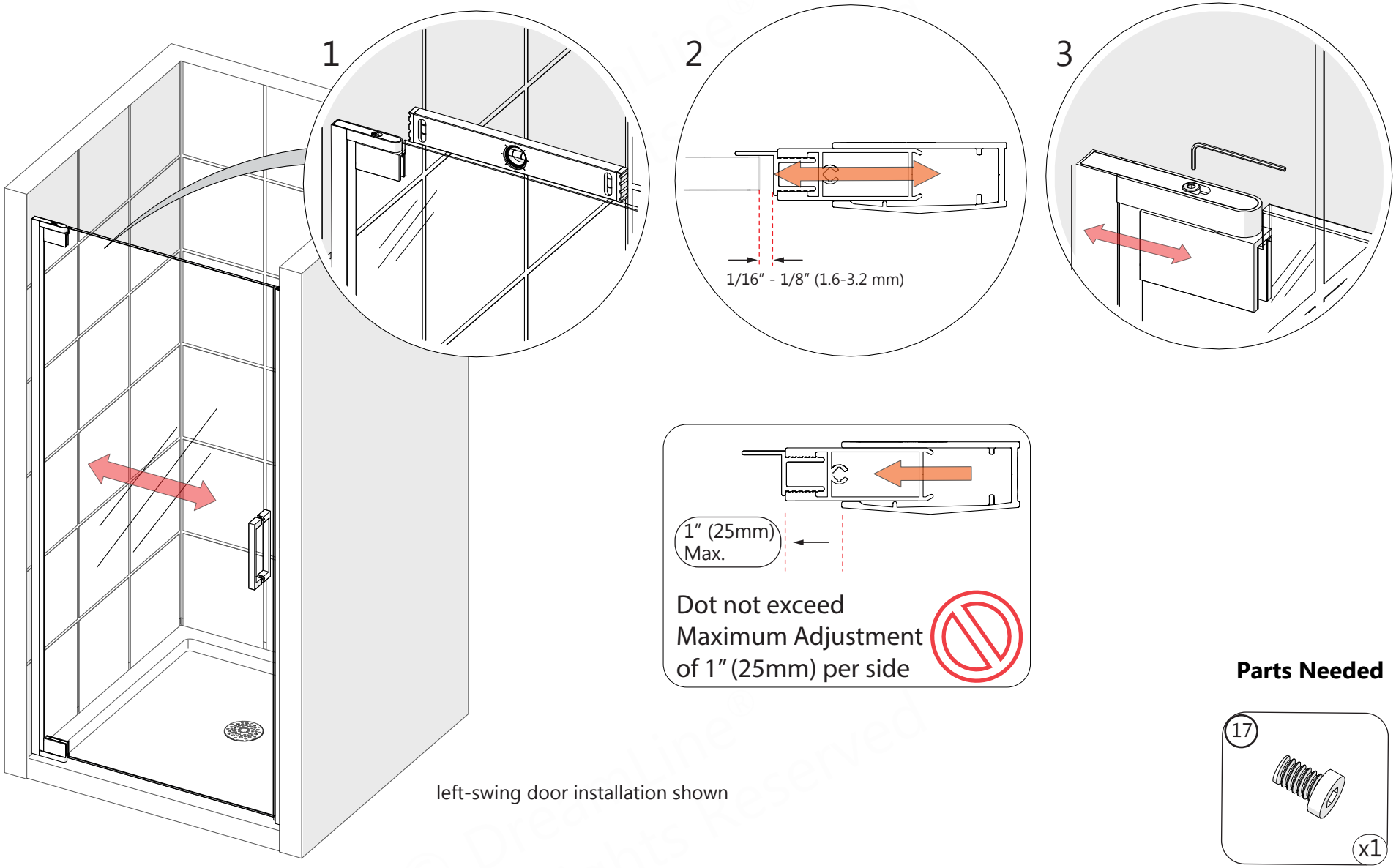

Fig 13

Parts Needed

Tools Needed

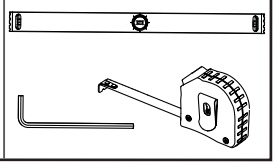

Use caution not to damage the edges of the door glass during adjustments.

©2025 DreamLine® All Rights Reserved

14

Decorative Cover Installation

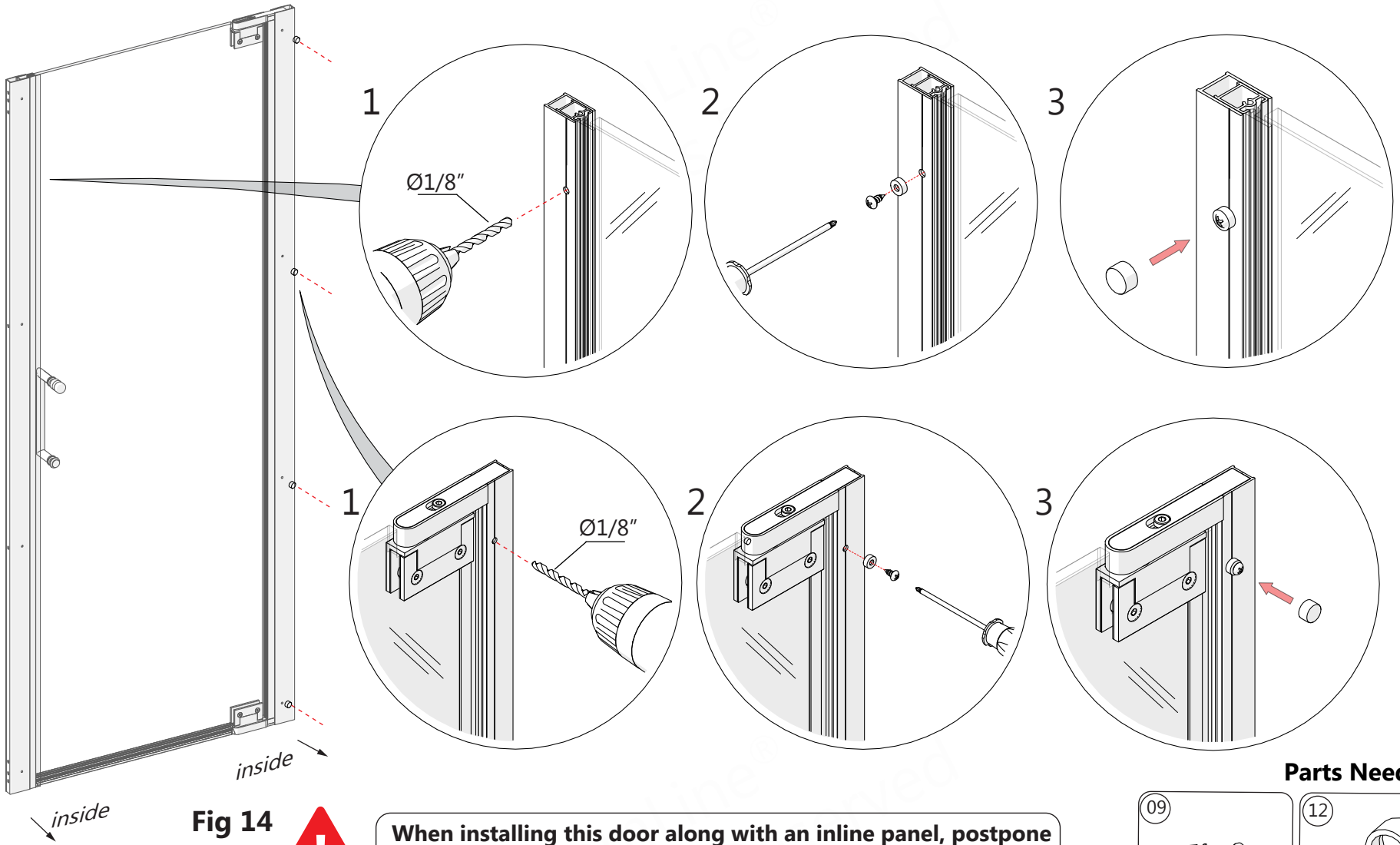

Fig 14

When installing this door along with an inline panel, postpone this step until overall width adjustments have been made.

NOTE

Only drill through the first layer of the **Glass Profiles (#02/04)** using an **Ø1/8"** drill bit.

Turn to **Page 27** for instructions to screw the bottom **Pivot Assembly (#7)** to the threshold if desired. Otherwise, continue on to the next step.

left-swing door installation shown from the inside

Parts Needed

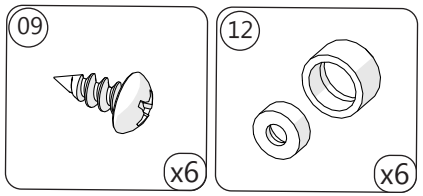

Tools Needed

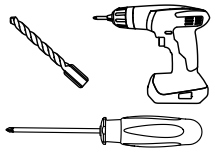

©2025 DreamLine® All Rights Reserved

15

Bottom Sweep Vinyl Installation

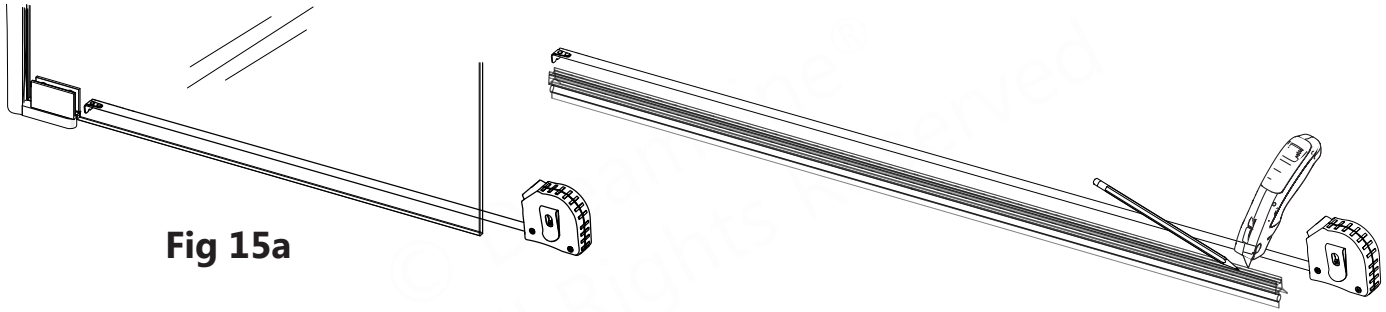

Fig 15a

Fig 15b

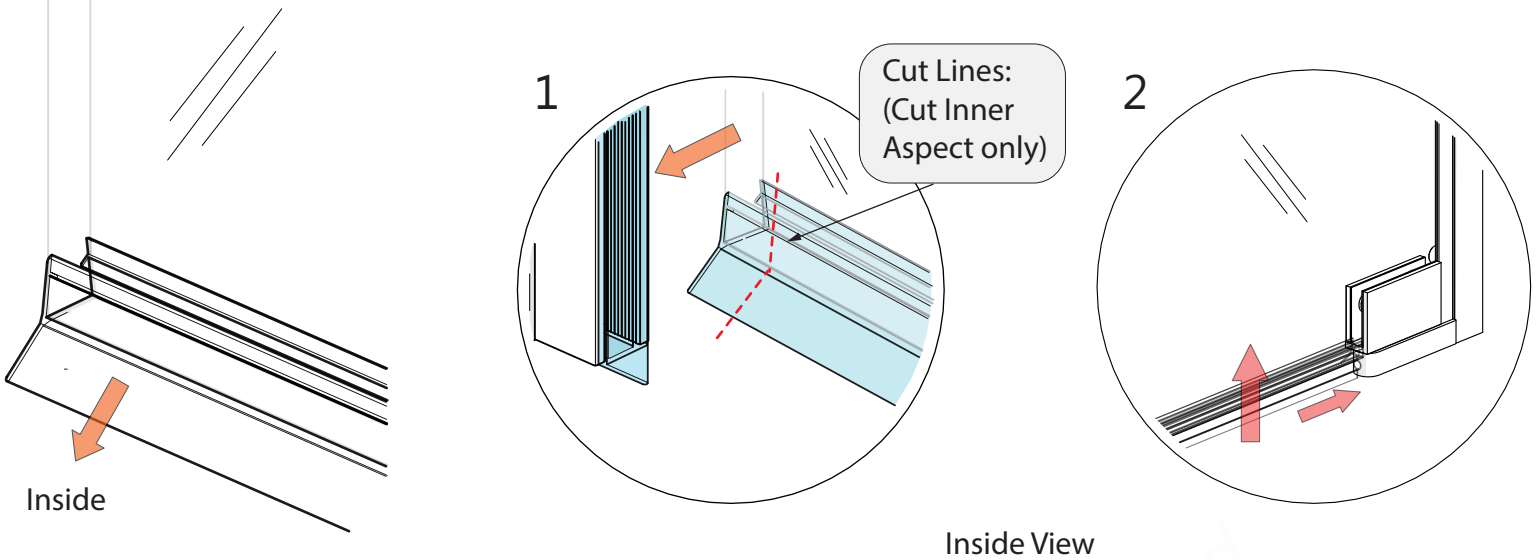

3

TIP

Close the door, mark and notch the inner aspect only of the inner-side of the **Bottom Sweep (#11)** where it overlaps the **Snap-in Anti-Water Strip (#10)** when the door is in the closed position. **(Fig 15b.1)**

Parts Needed

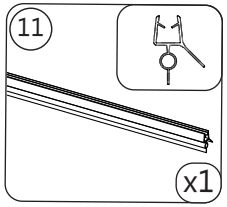

Tools Needed

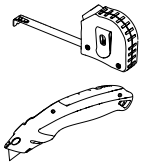

©2025 DreamLine® All Rights Reserved

16

NOTE **The surfaces need to be clean and free of debris before applying silicone.**

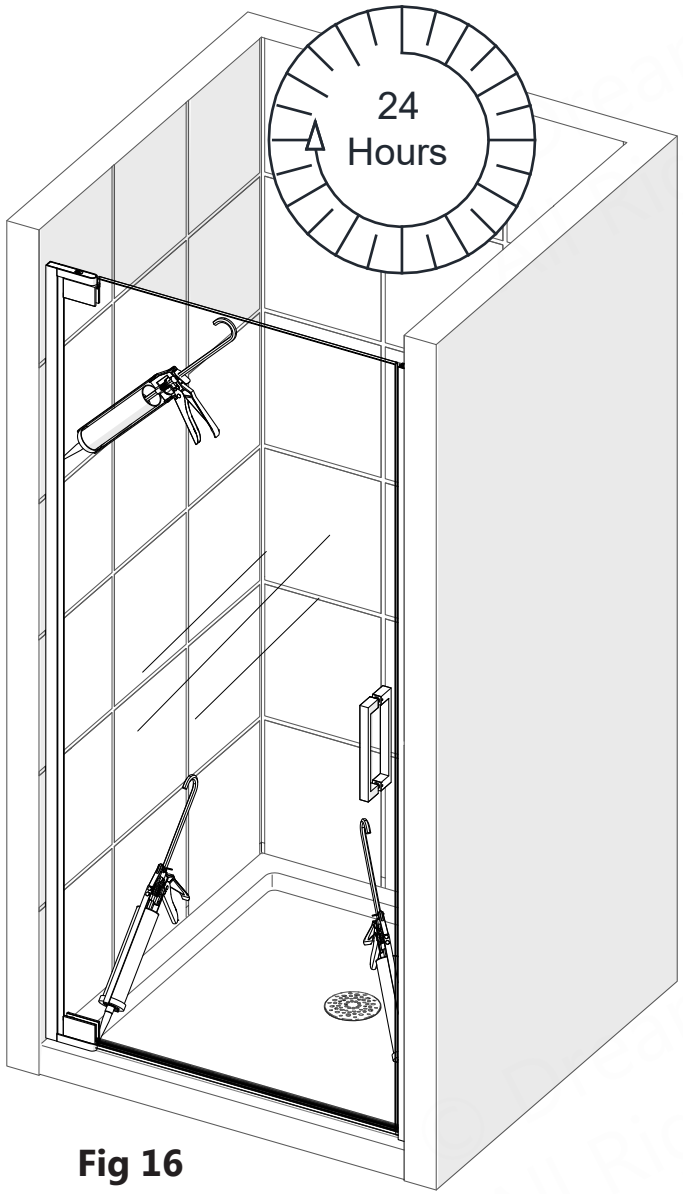

Fig 16

This completes the single door installation.

For the installation of a model that includes inline panel glass:
-Complete the installation steps using the manual that is packaged with the inline panel glass.
Note that the strike side **Glass Profile (longer) (#04)** and **Wall Profile Strike Side (longer) (#05)** will not be used with the inline panel installation.

Allow 24 hours for the silicone caulk to cure before using the shower.

Tools Needed

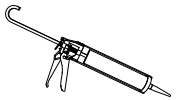

©2025 DreamLine® All Rights Reserved

17

Securing the Bottom Pivot Assembly To The Threshold

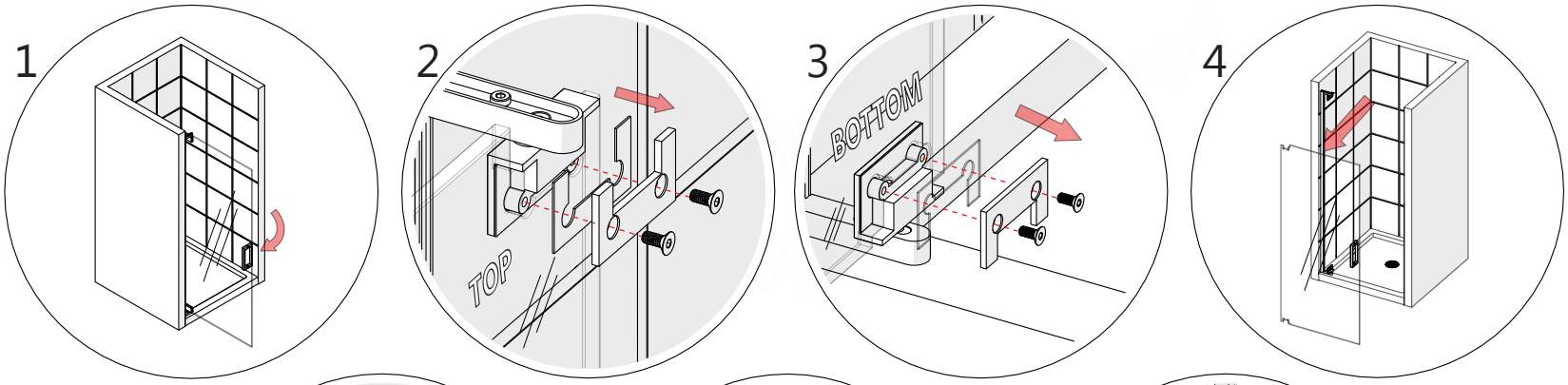

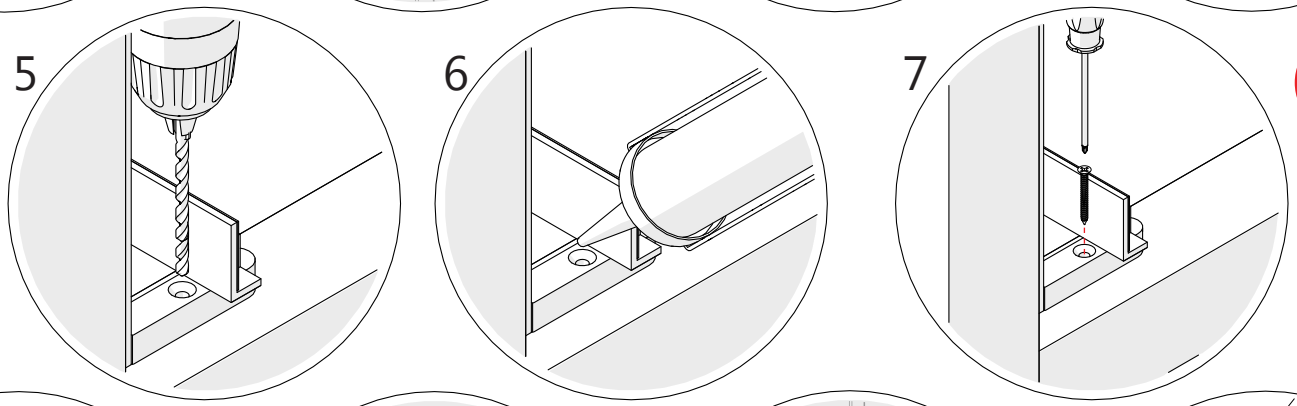

NOTE

After the bottom pivot is screwed to the threshold, adjustment will be limited to the strike side wall profile system.

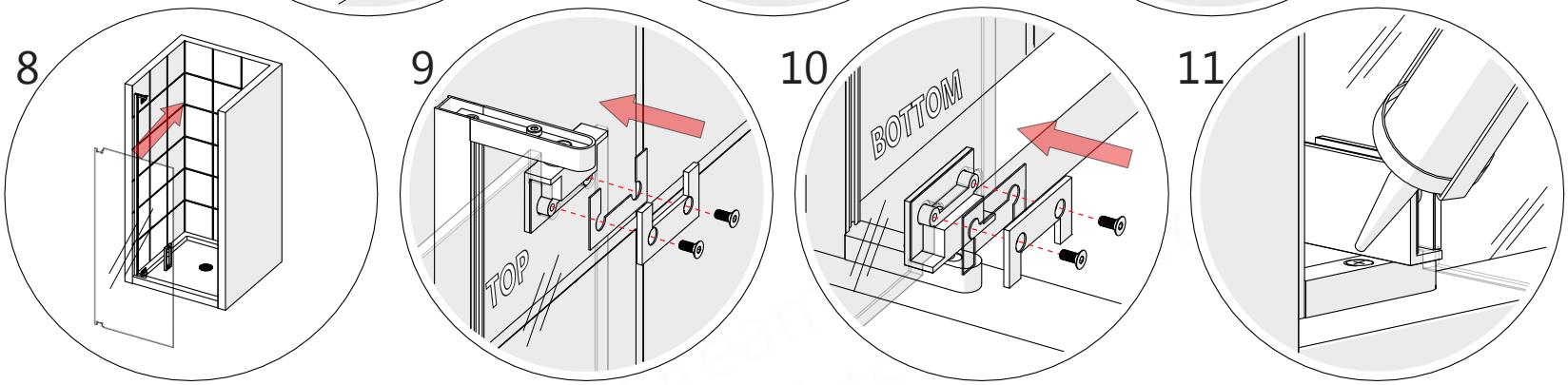

Parts Needed

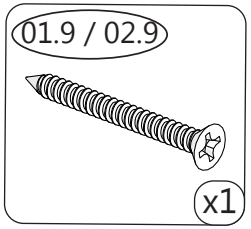

Tools Needed

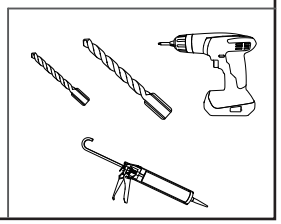

NOTE

- For installation into an **Acrylic Threshold**:
  drill a **Ø1/8"(3mm)** hole and use the **ST4.2×40mm Countersunk Screw (#01.9 / 02.9)**

OR

- For installation into a **Tile Threshold**:
  drill a **Ø3/16"(4mm)** hole up to the stud, drill an **Ø1/8"(3mm)** pilot hole and use the **ST4.2×40mm Countersunk Screw (#01.9 / 02.9).**

Use a longer drill bit to drill through the hole in the Pivot Assembly.
see Fig 5

NOTE

Use caution not to scratch the hinge surface.

©2025 DreamLine® All Rights Reserved

Product Maintenance

BASES and BACKWALLS: To ensure long lasting life for your acrylic back walls: wipe them off after each use with a soft cloth. To clean the acrylic back walls use non-abrasive sprays or cream based cleaners. Avoid the use of aerosol spray cleaners. Never use abrasive cleansers, metal brushes or scrapers that could permanently scratch or dull the surface.

GLASS: To ensure long lasting life for your glass shower products: wipe them off after each use with a soft cloth. Rinse and wipe off the glass using either a soft cloth or a squeegee to prevent soap buildup and water spots (Hard water can etch the surface of the glass over time if left to dry). To prevent scratching the surface: never use abrasive cleaners or cleaning products that contain scouring agents. Never use bristle brushes or abrasive sponges that may scratch the surface of the glass.

HARDWARE: To ensure a long lasting finish: wipe off all metal parts after each use with a soft cloth. Do not use abrasive cleaners or cleaning products containing ammonia, bleach or acid. If accidentally used, rinse the surface as soon as possible to prevent damage to the finish (peeling or corrosion). After cleaning the polished finishes, rinse thoroughly and wipe dry with a soft, clean cloth. Clean stainless steel surfaces at least once a week. When applying stainless steel cleaner or polish to stainless steel hardware, work with the grain (not across the grain). Never use an abrasive sponge or cloth, steel wool or wired brush as these may permanently scratch the surfaces.

NOTE **To maximize the life of your door, it is important to regularly inspect the glass and other hardware for misalignment, proper attachment, and/or damage. Contact DreamLine® with any questions or concerns.**

ELEGANCE / ELEGANCE-LS Single Door Maintenance Checklist

☐ Check that the unit is stable, operates smoothly and that the installation is secure

☐ Confirm that all screws are tight

☐ Confirm that all vinyl seals are intact (replace if missing or damaged to prevent water leakage)

☐ Inspect exposed and concealed glass edges for damage
- ☐ **Damaged Glass Must be Replaced**

©2025 DreamLine® All Rights Reserved

Troubleshooting

Problem/Symptom	Suggested Solution	Page(s)
Missing Parts	•Check all shipping/packaging material for missing parts/components. •If not found, contact DreamLine Customer Support [1-866-731-2244] to order factory part replacement.	——
Door Glass (#03) does not close flush with the Strike Profile	• Inspect the **Bottom Sweep Vinyl (#11)** and ensure the orientation of the vinyl is installed correctly. •Check that the Strike Profile is installed correctly so the Door Glass closes flush with the **Strike Vinyl Seal (#15)** •Check that the reveal between the door and strike vinyl is consistent /even. Use a level and adjust the assembly as necessary	20-23; 25
During operation the shower assembly shifts within the wall profile	•Check that the screws connecting the pivot-side Glass Profiles and Wall Profiles are installed correctly attaching the two extrusions together. •Install all **ST4.0×10mm Pan Head Screws (#09)** and **Decorative Covers (#12)** are securing the Glass Profiles to the Wall Profiles •Open the **Door Glass (#03)** and ensure the bottom **Pivot Assembly-B (#02)** is screwed down to the threshold. To create a tight seal, it may be necessary to screw down into the threshold	24; 27
Water Leakage: beneath the bottom **Pivot Assembly-B (#02)**	•Inspect the silicone caulk application; Remove and replace if necessary •Check that the **Bottom Sweep Vinyl (#11)** makes contact with the **Pivot Assembly-B (#02)** when the door is in the closed position •Direct the water flow away from the area	——
Water Leakage: beneath the **Bottom Sweep Vinyl (#11)**	•Inspect and ensure the threshold is pitched correctly into the shower •Check that the **Bottom Sweep Vinyl (#11)** is installed correctly onto bottom of the **Door Glass (#03)** •Direct the water flow away from the area	25
Pivot Assemblies are binding on hinge-side Vinyl Insert	•Using a utility razor knife, notch the vinyl around the pivot.	——

TIP

Prior to contacting DreamLine® Customer Service, please have the following information readily available:

- Purchase Order Information
  - Name, PO Number, Dealer/Vendor Name, etc.
- SKU/Model Number (see Pages 30-32)
- Factory Part Information (see Pages 30-32)

©2025 DreamLine® All Rights Reserved

Factory Parts Information

ELEGANCE AND ELEGANCE-LS HARDWARE		FACTORY PARTS INFORMATION	
ITEM #	**FACTORY PART NUMBER**	**ITEM DESCRIPTION**	**QTY**
01	0403701-1830 / 0403704-1830 / 0403706-1830 / 0403709-1830	Wall Profile Pivot Side	1
02	0403801-1795 / 0403804-1795 / 0403806-1795 / 0403809-1795	Glass Profile Hinge Side (shorter)	1
03	(See Pages 30 and 31)	Door Glass	1
04	0403801-1830 / 0403804-1830 / 0403806-1830 / 0403809-1830	Glass Profile Strike Side (longer)	1
05	0403701-1830 / 0403704-1830 / 0403706-1830 / 0403709-1830	Wall Profile Strike Side	1
06	07221041 / 07224041 / 07226041 / 07229041	Handle	1
07	07011053 / 07014053 / 07016053 / 07019053	Pivot Bracket - Top (reversible)	1
08	07011054 / 07014054 / 07016054 / 07019054	Pivot Bracket - Bottom (reversible)	1
09	07551011 / 07554011 / 07556011 / 07559011	Decorative Cover and Washer	11
10a	063008000-1795 (72”)	Bumper Seal	1
10b	063008000-1829 (70 5/8”)	Bumper Seal	1
11	063015100-0753 / 063015100-0854 / 063015100-1000	Bottom Sweep (30", 34", 40")	1
12	07552148	Anchor	12
13	091202	Bolt M4 x 16 with washer	4
14	091101	Pan Head screw ST4.0 x 10	8
15	092105	Flat Head Screw ST4.2 x 25	2
16	090108	Large Truss Head Screw ST4.2 x 40	16
17	095202	Round Head Socket Bolt M6 x 12	1
18	094201	M6x12 Countersunk Hex Head Screw	1

BOLD digit indicates finish color:

1 = Chrome

4 = Brushed Nickel

6 = Oil-Rubbed Bronze

9 = Matte Black

Contact **Support@DreamLine.com** for Part replacement, installation assistance or additional information.
Complete **Warranty** information is available on **DreamLine.com**.

©2025 DreamLine® All Rights Reserved

Factory Parts Information - Elegance Door Glass

25-1/4" - 27-1/4" ELEGANCE {SHDR-4125720-##}		FACTORY PARTS INFORMATION	
ITEM #	**FACTORY PART NUMBER**	**ITEM DESCRIPTION**	**QTY**
03	010071003	Door Glass	1 pc

27” - 29” ELEGANCE {SHDR-4127720-##}		FACTORY PARTS INFORMATION	
ITEM #	**FACTORY PART NUMBER**	**ITEM DESCRIPTION**	**QTY**
03	010071008	Door Glass	1 pc

28-3/4" - 30-3/4" ELEGANCE {SHDR-4128720-##}		FACTORY PARTS INFORMATION	
ITEM #	**FACTORY PART NUMBER**	**ITEM DESCRIPTION**	**QTY**
03	010071008	Door Glass	1 pc

30-1/2" - 32-1/2" ELEGANCE {SHDR-4130720-##}		FACTORY PARTS INFORMATION	
ITEM #	**FACTORY PART NUMBER**	**ITEM DESCRIPTION**	**QTY**
03	010071008	Door Glass	1 pc

32-1/4" - 34-1/2" ELEGANCE {SHDR-4132720-##}		FACTORY PARTS INFORMATION	
ITEM #	**FACTORY PART NUMBER**	**ITEM DESCRIPTION**	**QTY**
03	010071008	Door Glass	1 pc

34" - 36" ELEGANCE {SHDR-4134720-##}		FACTORY PARTS INFORMATION	
ITEM #	**FACTORY PART NUMBER**	**ITEM DESCRIPTION**	**QTY**
03	010071008	Door Glass	1 pc

35-3/4" - 37-3/4" ELEGANCE {SHDR-4135720-##}		FACTORY PARTS INFORMATION	
ITEM #	**FACTORY PART NUMBER**	**ITEM DESCRIPTION**	**QTY**
03	010071008	Door Glass	1 pc

Contact **Support@DreamLine.com** for Part replacement, installation assistance or additional information.
Complete **Warranty** information is available on **DreamLine.com**.

©2025 DreamLine® All Rights Reserved

Factory Parts Information - Elegance-LS Door Glass

25-1/4" - 27-1/4" ELEGANCE-LS {SHDR-4325000-##}		FACTORY PARTS INFORMATION	
ITEM #	**FACTORY PART NUMBER**	**ITEM DESCRIPTION**	**QTY**
03	010071002	Door Glass	1 pc

27" - 29" ELEGANCE-LS {SHDR-4327000-##}		FACTORY PARTS INFORMATION	
ITEM #	**FACTORY PART NUMBER**	**ITEM DESCRIPTION**	**QTY**
03	010071003	Door Glass	1 pc

28-3/4" - 30-3/4" ELEGANCE-LS {SHDR-4328000-##}		FACTORY PARTS INFORMATION	
ITEM #	**FACTORY PART NUMBER**	**ITEM DESCRIPTION**	**QTY**
03	010071004	Door Glass	1 pc

29-1/4" - 34-1/4" ELEGANCE-LS {SHDR-4325060-##}		FACTORY PARTS INFORMATION	
ITEM #	**FACTORY PART NUMBER**	**ITEM DESCRIPTION**	**QTY**
03	010071005	Door Glass	1 pc

30-1/2" - 32-1/2" ELEGANCE {SHDR-4330000-##}		FACTORY PARTS INFORMATION	
ITEM #	**FACTORY PART NUMBER**	**ITEM DESCRIPTION**	**QTY**
03	10071006	Door Glass	1 pc

31" - 33" ELEGANCE {SHDR-4327060-##}		FACTORY PARTS INFORMATION	
ITEM #	**FACTORY PART NUMBER**	**ITEM DESCRIPTION**	**QTY**
03	010071007	Door Glass	1 pc

32-1/4" - 34-1/4" ELEGANCE {SHDR-4332000-##}		FACTORY PARTS INFORMATION	
ITEM #	**FACTORY PART NUMBER**	**ITEM DESCRIPTION**	**QTY**
03	010071008	Door Glass	1 pc

Contact **Support@DreamLine.com** for Part replacement, installation assistance or additional information.
Complete **Warranty** information is available on **DreamLine.com**.

©2025 DreamLine® All Rights Reserved

NOTES

© DreamLine
All Rights Reserved

© DreamLine
All Rights Reserved

©2025 DreamLine® All Rights Reserved

© DreamLine
All Rights Reserved

DREAMLINE®
dream in style

© DreamLine
All Rights Reserved

TEL: 866-731-2244
FAX: 866-857-3638
DREAMLINE.COM

For more information on DreamLine® Shower Doors and Enclosures please visit **DreamLine.com**

©2025 DreamLine® All Rights Reserved

DreamLine®
The Ultimate Shower Door

Install the door first

Inline Panel - Style C

Shower Panel Installation Instructions

IMPORTANT
DreamLine® reserves the right to alter, modify or redesign products at any time without prior notice.
For the latest up-to-date technical drawings, manuals, warranty information or additional details please refer to your model's web page on **DreamLine.com**

© DreamLine All Rights Reserved

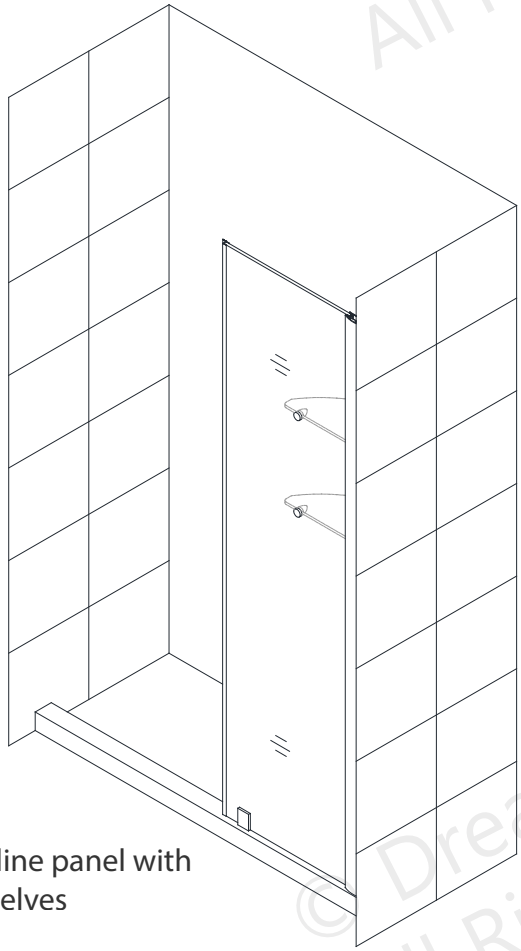

Inline panel with shelves

Right-Hand panel installation shown

This inline panel is used with the following models:

UNIDOOR Style C

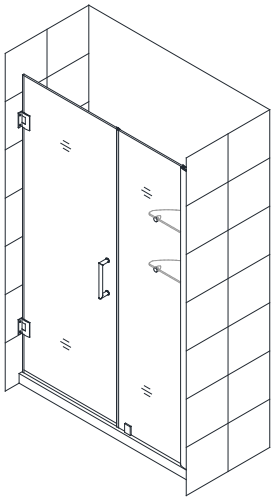

ELEGANCE Style C

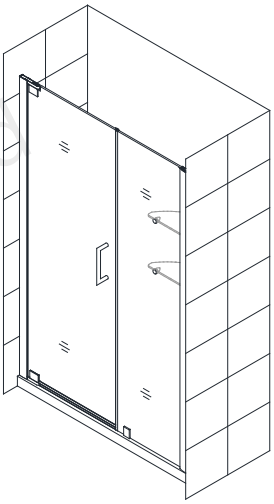

© DreamLine All Rights Reserved

PLEASE REVIEW THIS ENTIRE MANUAL PRIOR TO INSTALLATION

Questions?
*Please Call **DreamLine** Customer Support:* **1-855-831-2126**
Hours of Operation M-F 8AM - 7PM EST and Saturday 9AM - 5PM EST
Support@DreamLine.com

For more information about DreamLine® Shower Doors, Tub Doors & Enclosures, please visit **DreamLine.com**

©2018 DreamLine. All Rights Reserved

Model #s

UNIDOOR - Style C
w/inline panel for shelves

MODEL #s

SHDR-20357210CS-##
SHDR-20367210CS-##
SHDR-20377210S-##
SHDR-20387210S-##
SHDR-20397210S-##
SHDR-20407210S-##
SHDR-20417210S-##
SHDR-20427210S-##
SHDR-20417210CS-##
SHDR-20427210CS-##
SHDR-20437210S-##
SHDR-20447210S-##
SHDR-20457210S-##
SHDR-20467210S-##
SHDR-20477210S-##
SHDR-20487210S-##
SHDR-20477210CS-##
SHDR-20487210CS-##
SHDR-20497210S-##
SHDR-20507210S-##
SHDR-20517210S-##
SHDR-20527210S-##
SHDR-20537210S-##
SHDR-20547210S-##
SHDR-20537210CS-##
SHDR-20547210CS-##
SHDR-20557210S-##
SHDR-20567210S-##
SHDR-20577210S-##
SHDR-20587210S-##
SHDR-20597210S-##
SHDR-20607210S-##

ELEGANCE - Style C
w/inline panel for shelves

MODEL #s

SHDR-4137720-##
SHDR-4139720-##
SHDR-4140720-##
SHDR-4142720-##
SHDR-4144720-##
SHDR-4146720-##
SHDR-4147720-##
SHDR-4149720-##
SHDR-4151720-##
SHDR-4152720-##
SHDR-4154720-##
SHDR-4156720-##
SHDR-4158720-##
SHDR-4159720-##

© DreamLine
All Rights Reserved

© DreamLine
All Rights Reserved

= Finish
01- Chrome
04- Brushed Nickel
06- Oil Rubbed Bronze
09- Satin Black

©2018 DreamLine. All Rights Reserved

DreamLine®
The Ultimate Shower Door

© DreamLine
All Rights Reserved

ClearMax™

This model is treated with DreamLine's exclusive ClearMax™ Glass technology. This is a specially formulated coating that prevents the buildup of soap and water spots.

Install the surface with the ClearMax™ label towards the inside of the shower. Please note that depending on the model, the glass may be coated on either one or both surfaces.

For best results, squeegee the glass after each use and dry with a soft cloth.

© DreamLine
All Rights Reserved

©2018 DreamLine. All Rights Reserved

Table of Contents

Section title	Page #
Preparation	2
Tools	3
Detailed Diagram of Shower Panel Components	4
Parts Diagram and Parts List	5-6
Adjustable Wall Profile System	6
Installation Steps	7-14
Vinyl Seals	9
Glass Shelves	13
Product maintenance	15

© DreamLine
All Rights Reserved

© DreamLine
All Rights Reserved

©2018 DreamLine. All Rights Reserved

Preparation

1. Prior to installation, examine all boxes and packages for shipping damage and compare the piece count with the packing slip. After opening all boxes and packages read this introduction carefully. Check that all of the necessary parts are included in the package by checking off the components on the "Detailed Diagram of Shower Panel Components". If the unit has been damaged, has a finishing defect, or has missing parts, please contact our customer support department within **3 business days** of the delivery date. **Please note that DreamLine® will not replace any damaged products or missing parts free of charge after 3 business days or if the product has been installed.** Contact DreamLine® if you have any questions, and please provide an order number, job name or other proof of purchase to help identify the original order.

2. **Please note that you should consult your local building codes with questions on installation compliance standards. Building and plumbing codes may vary by location, and DreamLine® is not responsible for code compliance standards for your project and will not accept any returns.**

3. If this unit is going to be installed in a new construction, please install all of the required plumbing and drainage before installing the shower. Use a competent and licensed (if required by local code) plumber for all plumbing installation

4. Make sure that prior to beginning the installation, the surfaces are leveled and solid and will be able to support the total weight of the unit. Also make sure the walls are at right angles. Irregular installation surface level, radius corners or improper angle of side walls will result in serious problems for your installation. Note that some adjustments and drilling will be necessary during the installation process.

5. Protect all primary surfaces of the product during installation. Never set the glass down directly onto a tile floor. Leave corner protectors in place until necessary to remove them. Always use a piece of wood or cardboard to protect the bottom edge and corners of the glass prior to and during installation.

6. **This unit must be installed upon a finished threshold and against finished walls.**

7. **This model requires that you drill into the threshold for proper installation. Contact the manufacturer of the base or threshold material with any questions regarding the drilling of holes into their product.**

8. This model requires a minumum of **1-1/2"** of flat level threshold space for installation.

9. **Professional installation recommended.**

© DreamLine
All Rights Reserved

NOTE: DO NOT attach the handle to the door glass or the towel bar to the panel glass until instructed.
DO NOT use the handle or towel bar to lift the glass during installation. This may result in damage to the glass and/or serious injury. Always use an assistant or a professional grade glass suction cup when handling heavy glass.

©2018 DreamLine. All Rights Reserved

Tools

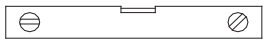
Level

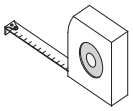
Tape Measure

Pencil

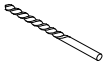
Drill bit (Ø5/16") (8mm)

Drill bit (Ø1/8") (3mm)

Power Drill

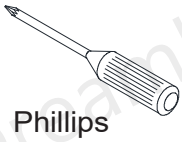
Phillips Screwdriver

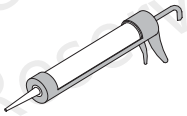
Silicone

Soft Head Hammer

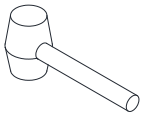
Mallet

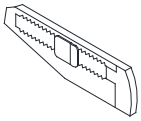
Knife

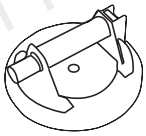
Professional-grade Glass suction cup

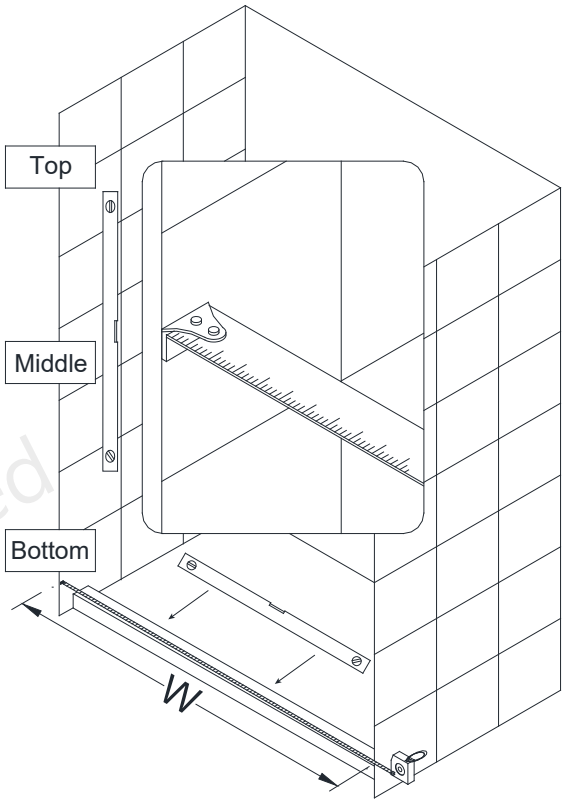

Tip: Measure the finished opening before proceeding with the installation to be sure that the correct model size has been ordered.

Tip: Prior to installation, cover the shower/tub drain with tape to prevent losing screws or small parts.

Tip: Set screw gun clutch to low setting when installing screws and bolts to prevent stripping the heads.

Threshold must be level

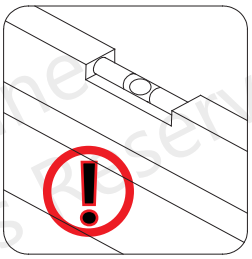

NOTE: Unpack your unit carefully and inspect it. Lay it out and identify all parts using the detailed diagram and packing list in this manual as a reference. Before discarding the carton, check for small hardware bags that may have fallen to the bottom of the box. If any parts are damaged or missing, please contact DreamLine® for replacement. The shipping boxes may contain extra parts not used in your model configuration.

NOTE: Retain these installation instructions for future reference.

© DreamLine All Rights Reserved

©2018 DreamLine. All Rights Reserved

Detailed Diagram of Shower Panel Components

Diagram C

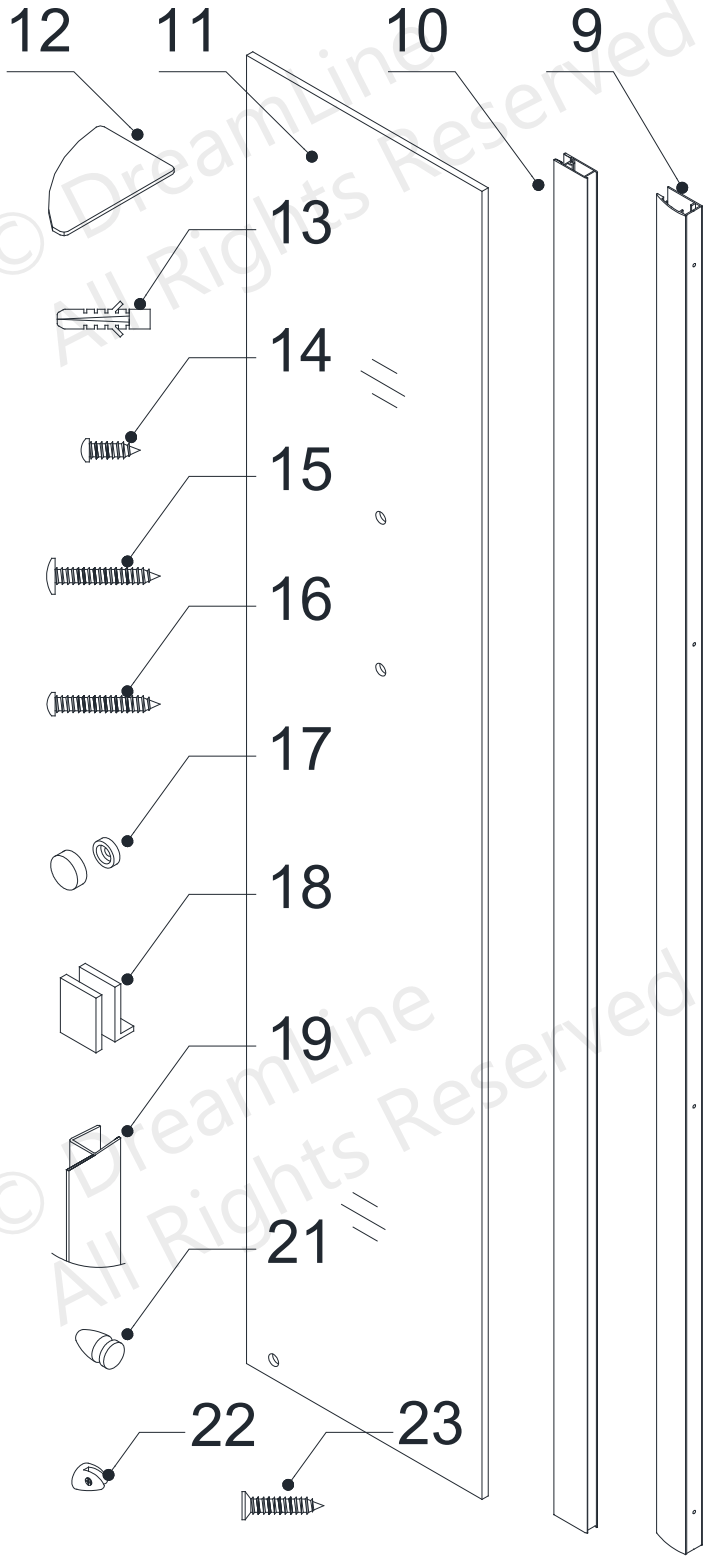

©2018 DreamLine. All Rights Reserved

Parts List

Diagram C

PART#	DESCRIPTION	QTY	PART#	DESCRIPTION	QTY
09	Wall profile	1pc	16	Pan head screw ST4.2x35	1pc
10	Glass profile	1pc	17	Decorative screw cover and washer	4pcs
11	Panel glass	1pc	18	Bottom bracket	1pc
12	Glass shelf	2pcs	19	Anti-Water strip (inline)	1pc
13	Wall Anchor	8pcs	21	Shelf bracket (with nut)	2pcs
14	Pan head screw ST4.2x10	3pcs	22	Shelf bracket (without nut)	4pcs
15	Truss head screw ST4.2x40	4pcs	23	Countersunk screw ST4.2x40	4pcs

© DreamLine
All Rights Reserved

©2018 DreamLine. All Rights Reserved

Adjustable Wall Profile System

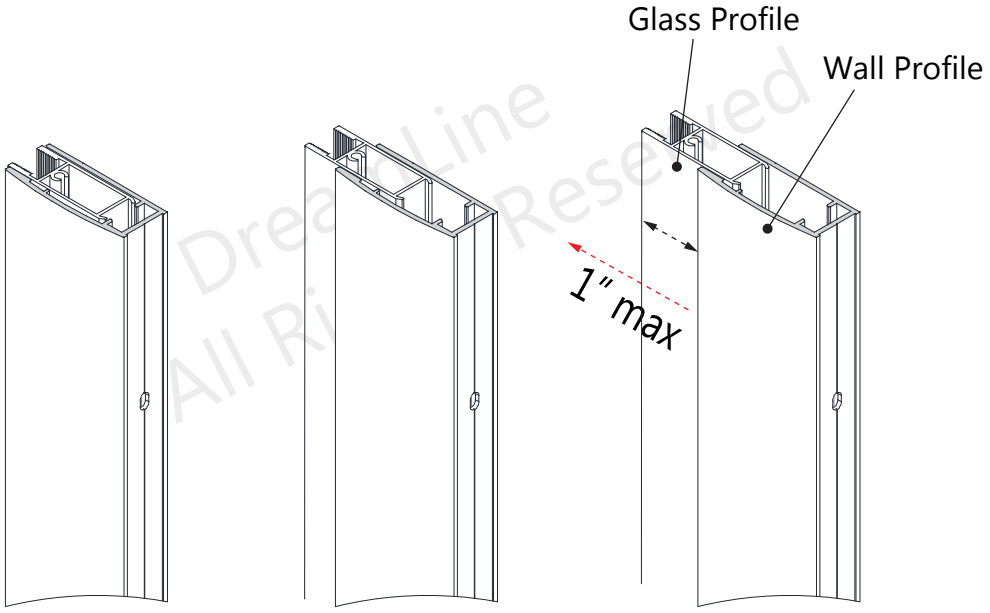

The Glass Profiles can be adjusted within the Wall Profiles for overall width or to correct for out-of-plumb conditions within the model size. Screw them together after making final adjustments.

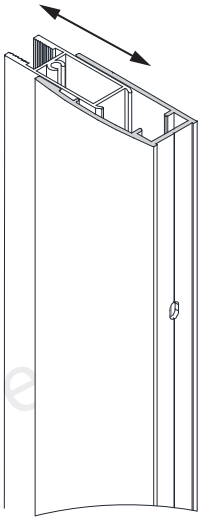

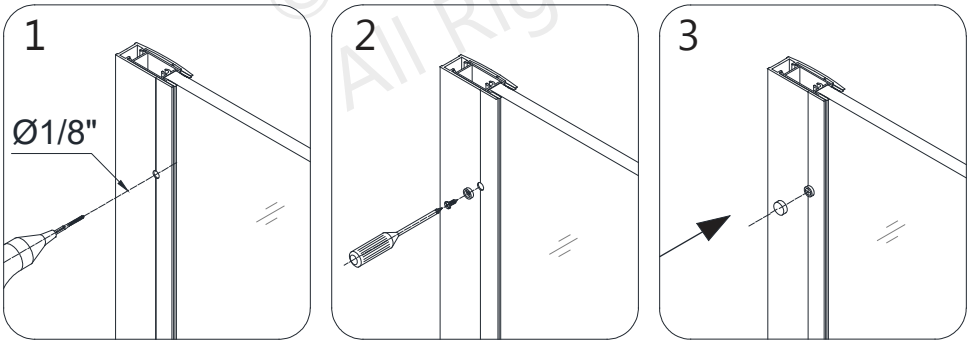

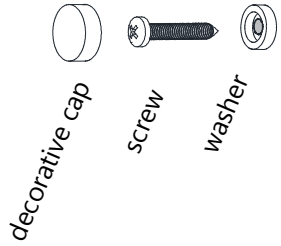

© DreamLine
All Rights Reserved

©2018 DreamLine. All Rights Reserved

Installation steps

NOTE: The UNIDOOR or ELEGANCE shower door needs to be installed prior to proceeding with the following Inline Panel Glass installation. Please see the Single Shower Door installation manual included in the door packaging for complete shower door installation instructions. Before beginning the installation, recheck the finished opening size. Specific model size information can be found on DreamLine.com.

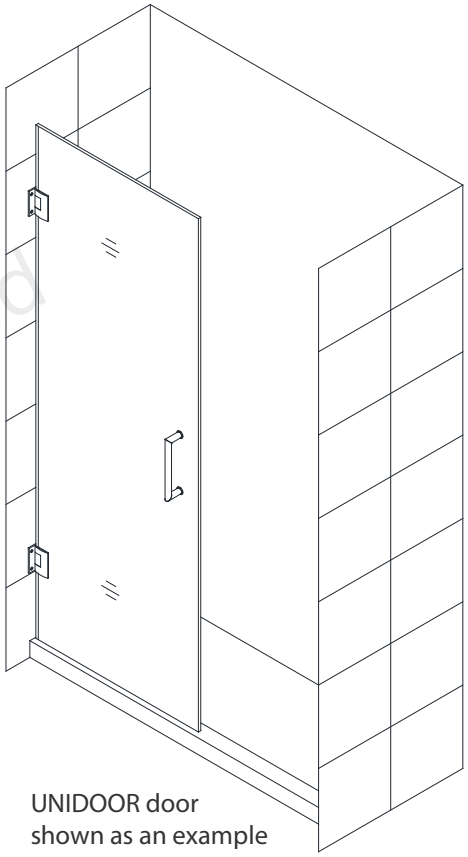

UNIDOOR door
shown as an example

NOTE: The left-swing Unidoor door installation is shown as an example throughout this manual. Use the same method for aligning the door and panel for the Elegance door and inline panel installation.

NOTE: The Unidoor and Elegance hinges are factory set to overclose 8°. The following procedure is recommended to ensure proper alignment of the panel glass and door glass.

1. Align the **Door** so that it is perpendicular to the wall and parallel with the outside of the threshold. Mark a line on the threshold for reference. Open the door to allow space for the panel installation. **(Fig 1)**

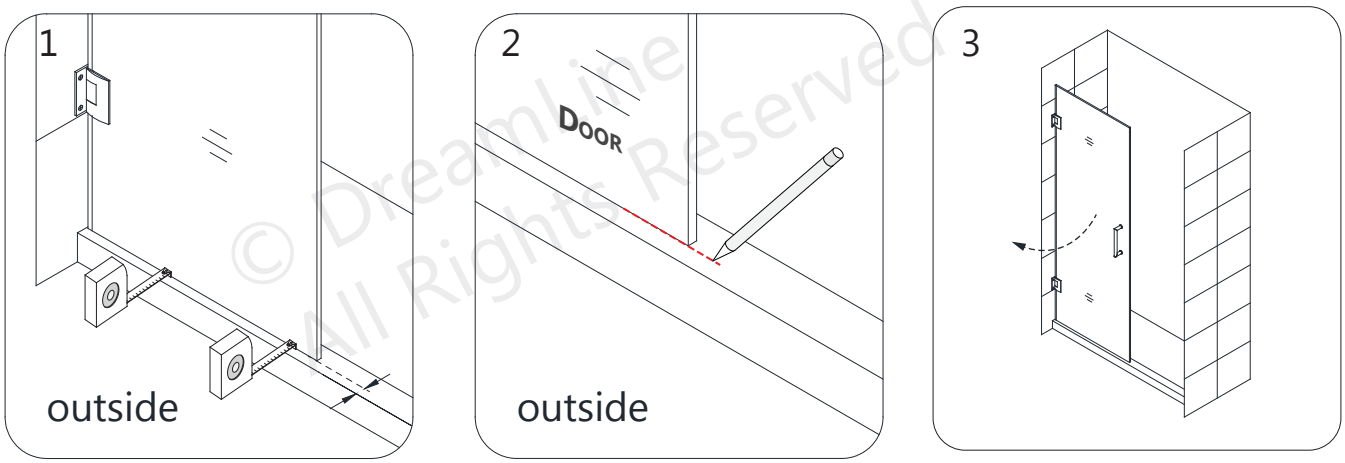

Fig 1

© DreamLine All Rights Reserved

©2018 DreamLine. All Rights Reserved

2. Apply clear silicone into the entire length of the channel in the **Glass Profile (#10)** and attach it to the edge of the **Panel Glass (#11)**. Make sure the **Glass Profile (#10)** is flush with the top and bottom of the **Panel Glass (#11).**
Insert the **Panel Glass (#11)** with the attached **Glass Profile (#10)** into the **Wall Profile (#09)**. **(Fig 2)**

ATTENTION: Please note that the bottom hole in the corner of the Panel Glass must be opposite from the Glass Profile.

NOTE: If the Glass Profile fit is too tight over the Panel Glass, use a rubber mallet and a piece of wood to gently tap on the glass profile. Never use a metal hammer or hit the profile without a wood bumper.

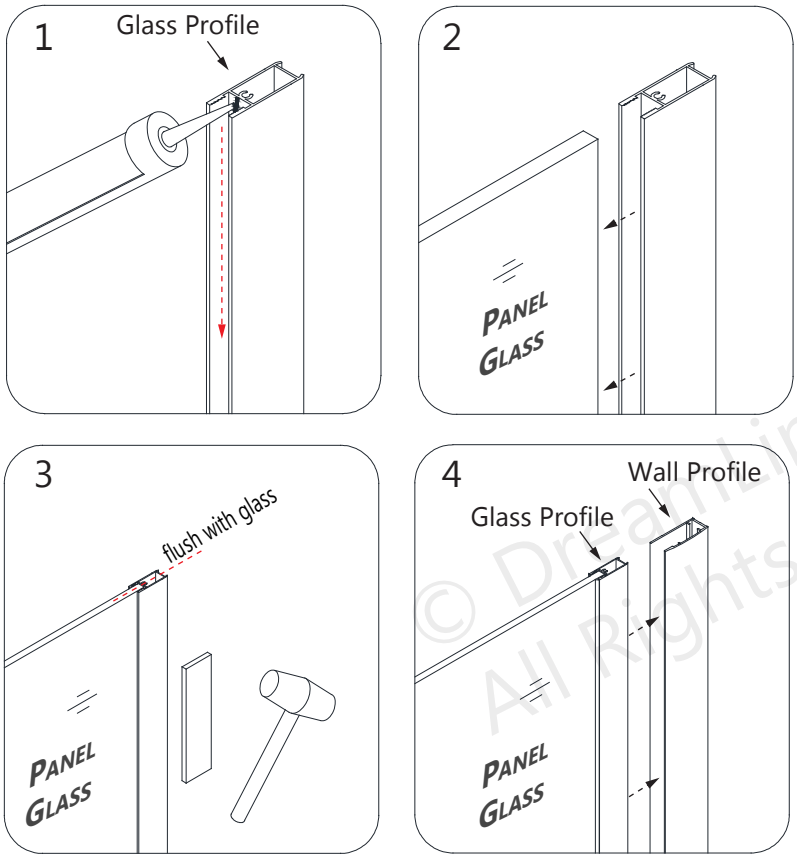

If necessary, use a rubber mallet to tap on the glass profile

Fig 2

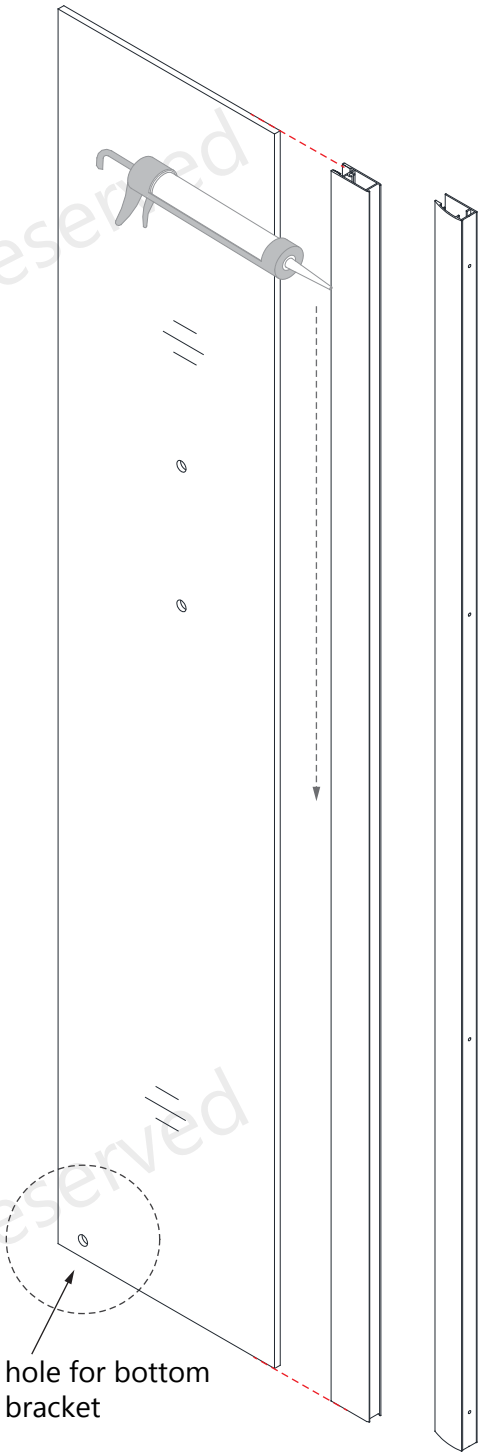

If possible, allow the silicone to cure before handling the assembled panel.

© DreamLine All Rights Reserved

©2018 DreamLine. All Rights Reserved

3. Press the **Anti-Water Strip (inline) (#19)** onto the vertical edge of the **Panel Glass (#11)**. (This will protect the edge of the panel glass and allow for proper spacing with the door glass).
Attach the **Bottom Bracket (#18)** through the bottom hole of the **Panel Glass (#11)**. **(Fig 3)**

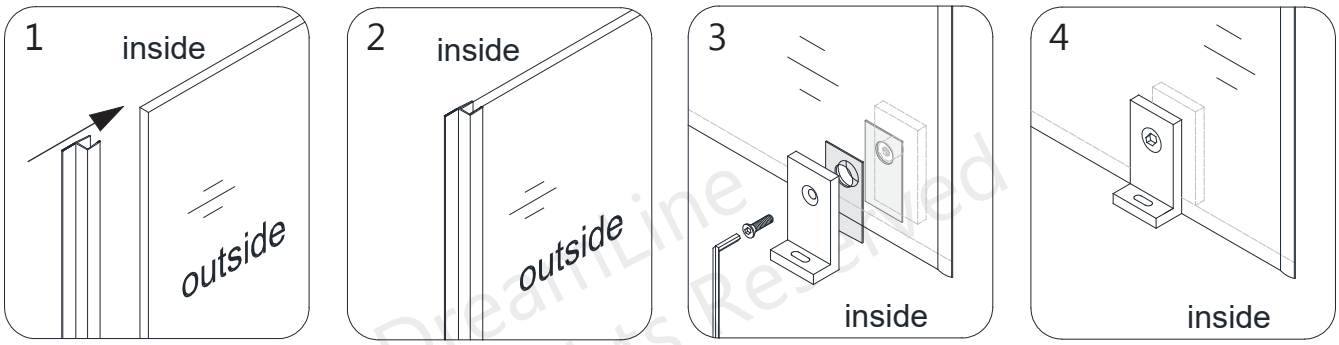

Fig 3

4. Carefully position the **assembled panel** onto the threshold and against the wall. Push the **Wall Profile (#09)** tight to the wall while holding the panel tight to the threshold. **(Fig 4)**

Use Caution not to bang the glass onto the threshold.

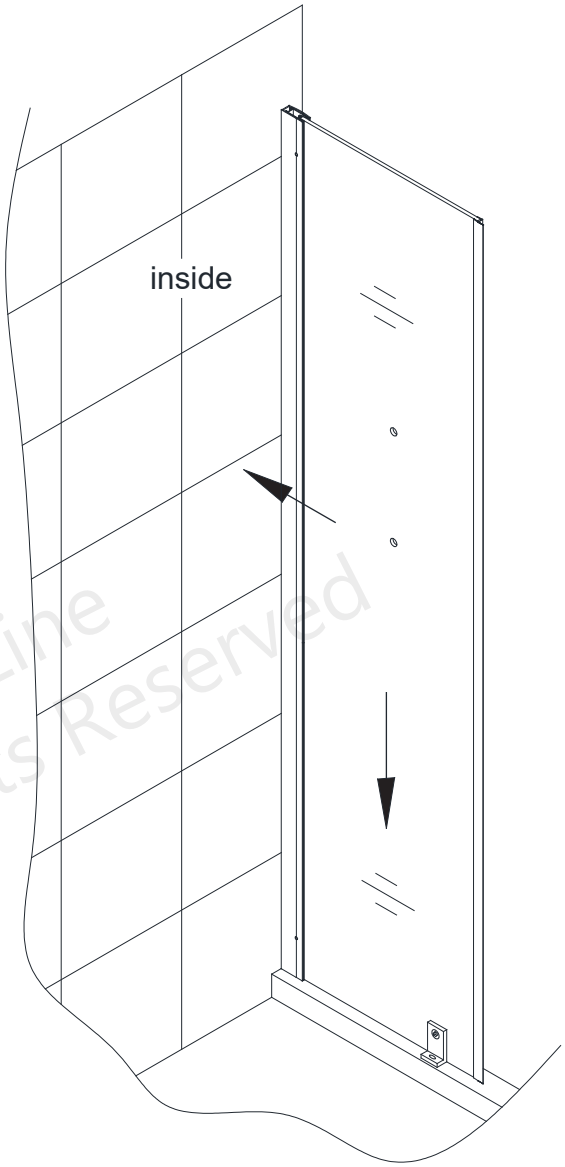

Fig 4

© DreamLine All Rights Reserved

©2018 DreamLine. All Rights Reserved

5. Close the **Door** and align the **Panel Glass (#11)** with the **Door Glass.** Use the reference mark on the threshold (from Step #1) to confirm that the **Door** is perpendicular to the wall. If needed, adjust the position of the **Panel Glass (#11)** so that the **Anti-Water Strip (inline) (#19)** makes contact with the **Door Glass** from top to bottom and creates a seal.

- Mark the wall along the inner edge of the **Wall Profile (#09)**.
- Mark the drilling hole onto the threshold through the hole in the **Bottom Bracket (#18)**. **(Fig. 5)**

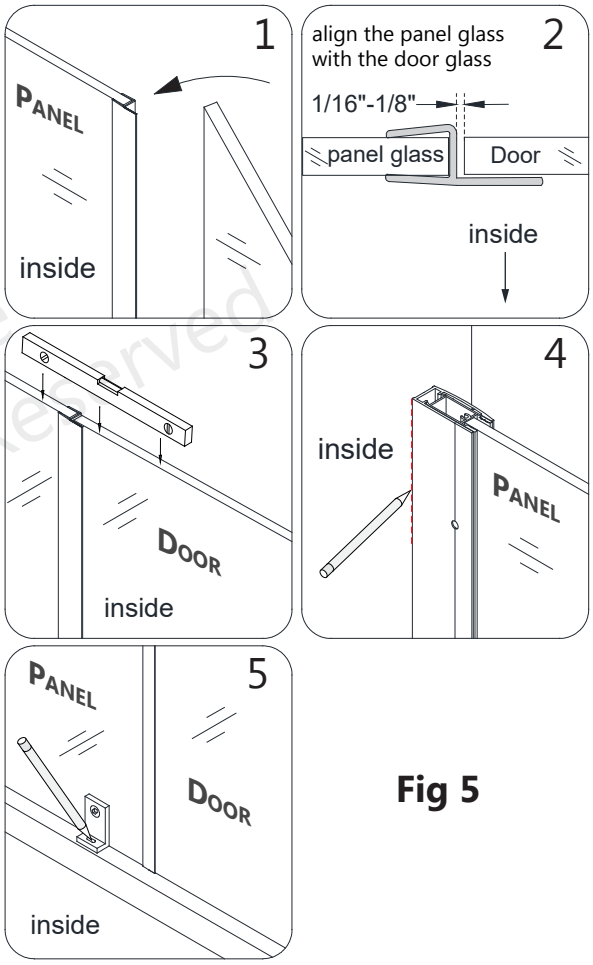

Fig 5

The two-piece wall profile system (consisting of the glass profiles and wall profiles) will allow for overall width and/or out-of-plumb adjustment within the model size.
See page 6 for details.

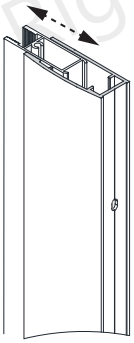

6. Remove the **Wall Profile (#09)** from the **Glass Profile (#10)/Panel Glass (#11)** assembly. Place the **Wall Profile (#09)** back onto the outlined position on the wall and mark the holes for drilling through the predrilled holes in the **Wall Profile (#09)**.
Drill the holes in the wall using a **Ø5/16"** drill bit and insert the **Wall Anchors (#13)**.
Apply silicone along the back of the **Wall Profile (#09)** and around the holes on the wall.
Fasten the **Wall Profile (#09)** to the wall with the **Truss Head Screw ST4.2×40 (#15)**. **(Fig 6)**

Use Caution not to pull the Glass Profile (#10) off of the Panel Glass (#11).

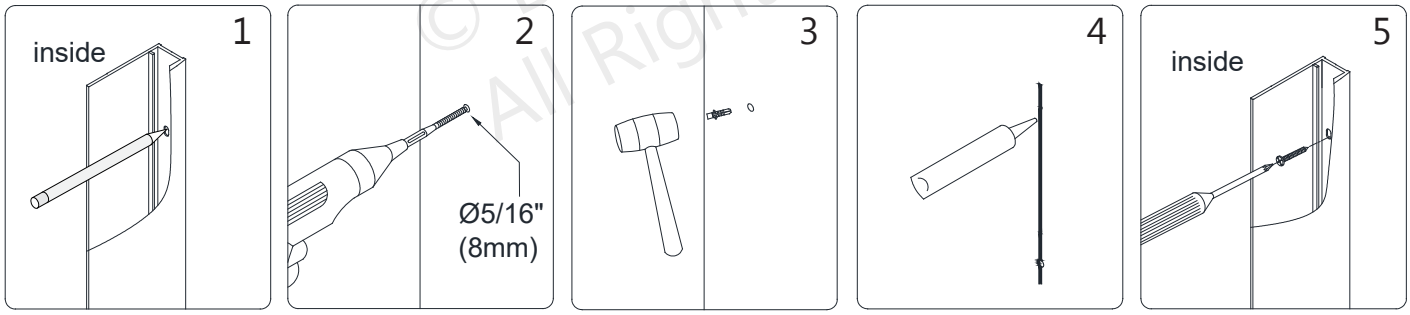

Fig 6

© DreamLine All Rights Reserved

©2018 DreamLine. All Rights Reserved

Double check the alignment and spacing of the panel glass with the door glass <u>before</u> drilling into the threshold for the bottom bracket.

7. Drill a hole for the **Bottom Bracket (#18)** into the threshold at the mark that was made in **step #5**. ** Use an **Ø1/8"** drill bit for installation into an acrylic base OR use a **Ø5/16"** drill bit and an anchor for installation into a tile threshold. Use the **Pan Head Screw ST4.2x35 (#16)** along with a raised white washer to attach the **Bottom Bracket (#18)** to the threshold and snap on the **Decorative Screw Cover (#17). (Fig 7a and Fig 7b)**

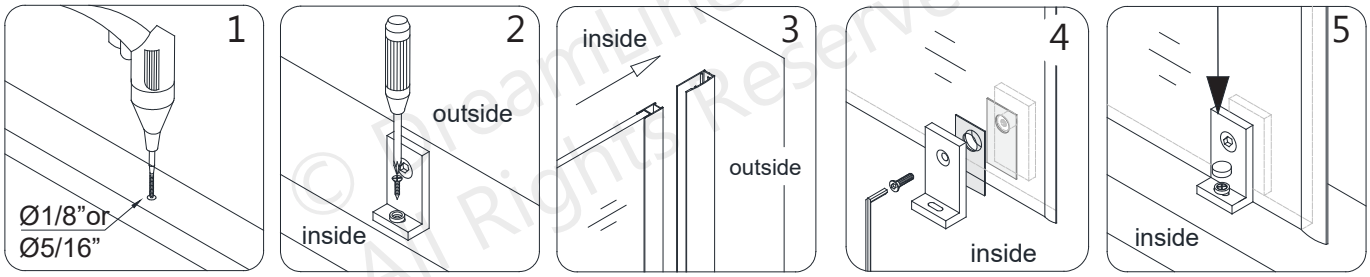

Fig 7a

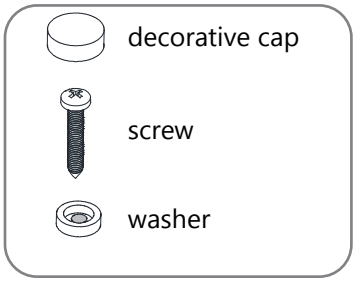

***NOTE:**

- <u>For installation into an **Acrylic Threshold**</u>: drill a **Ø1/8"(3mm)** hole and use the **Pan Head Screw ST4.2x35 (#16)**

OR

- <u>For installation into a **Tile Threshold**</u>: drill a **Ø5/16"(8mm)** hole, install a **Wall Anchor 5/16" (#13)** and use the **Pan Head Screw ST4.2x35 (#16)**

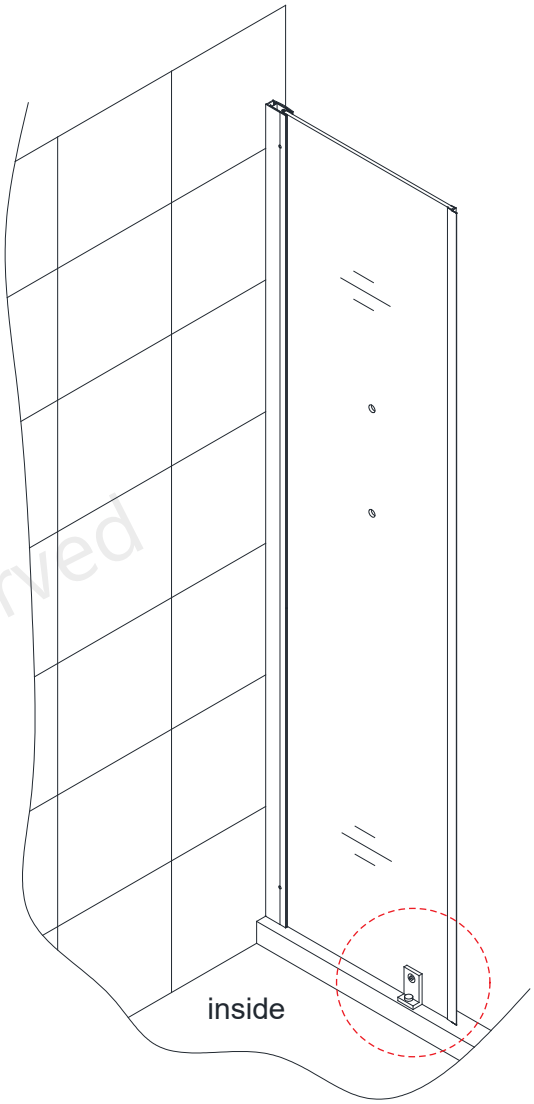

Fig 7b

© DreamLine All Rights Reserved

©2018 DreamLine. All Rights Reserved

8. Recheck the alignment and spacing of the **Door Glass** and **Panel Glass (#11)** and test the operation of the Door. After final adjustments of the **Panel Glass (#11)** drill holes into the **Glass Profile (#10)** through the predrilled holes in the **Wall Profile (#09)** using an **Ø1/8"** drill bit.
Use the **Pan Head Screws ST4.2×10 (#14)** and **Washers (#17)** to attach the **Wall Profile (#09)** to the **Glass Profile (#10)**. Cover the exposed screw heads with **Decorative Screw Cover (#17)**. **(Fig 8)**

NOTE: Only drill through the first layer of the Glass Profile.

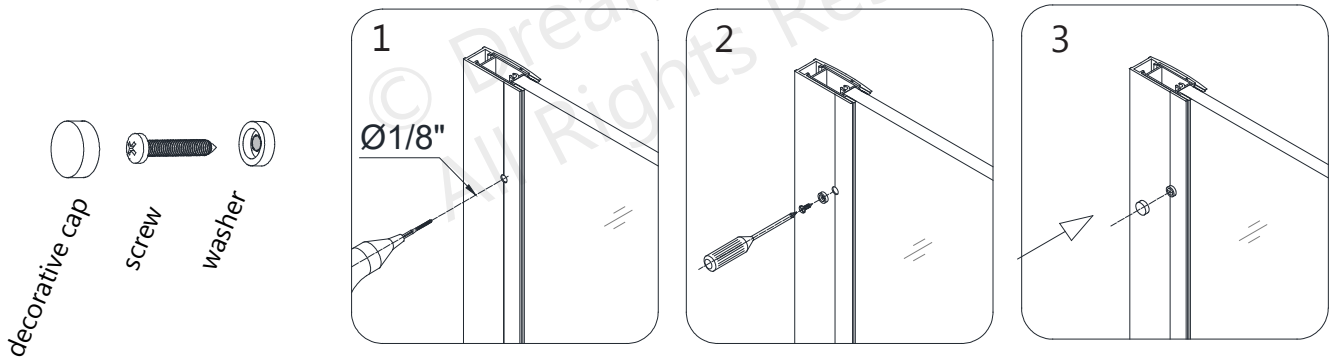

Fig 8

9. Apply a good quality mildew-resistant silicone along the connection of the **Wall Profile** to the wall and the **Panel Glass** to the threshold. **(Fig 9)**

NOTE: The installation is not complete until the required glass support shelves are installed. Proceed to the next step.

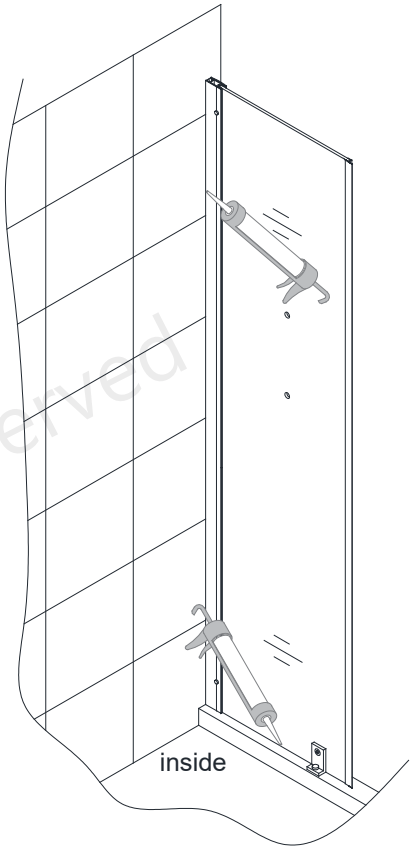

Fig 9

© DreamLine All Rights Reserved

©2018 DreamLine. All Rights Reserved

Glass Support Shelves Installation

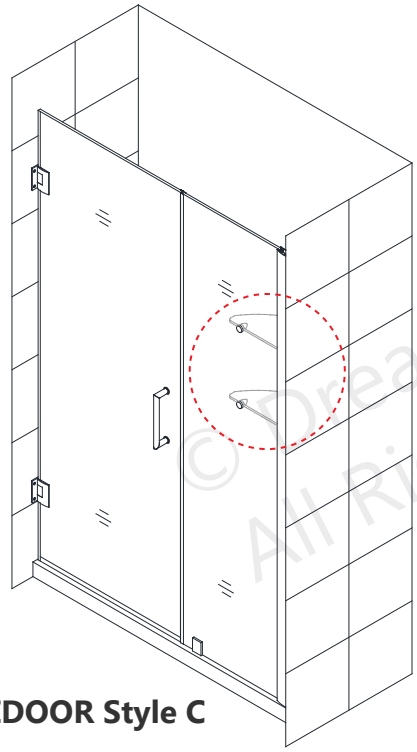

UNIDOOR Style C

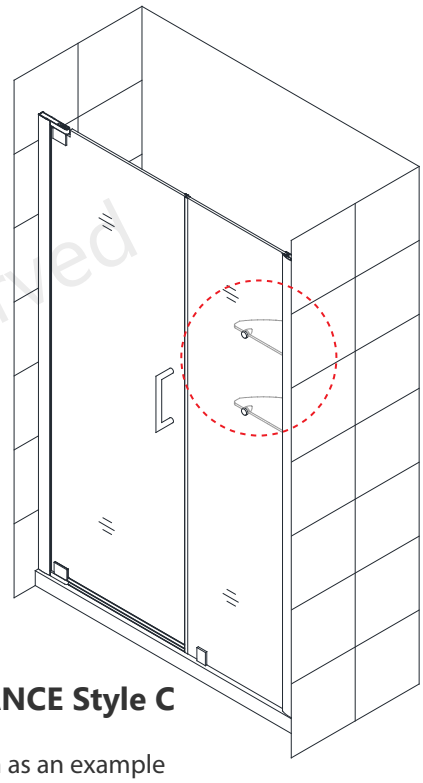

ELEGANCE Style C

Right-Hand panel installation shown as an example

10. Mark the **Glass Shelf (#12)** position on the wall. According to the measurements in **Fig. 10a1**, mark the drilling holes for the **Shelf Brackets (without nut) (#22)**.
Drill the holes using a **Ø5/16"** drill bit and insert the **Wall Anchors (#13)**. Attach the **Shelf Brackets (without nut) (#22)** to the wall using the **Countersunk Screw ST4.2×40 (#23)** and attach the **Shelf Brackets (with nut) (#21)** to the **Panel Glass (#11)**.
Insert the **Glass Shelves (#12)** into the **Shelf Brackets (#21 & #22)** and tighten the set screw at the bottom of each bracket. **(Fig 10a and Fig 10b)**

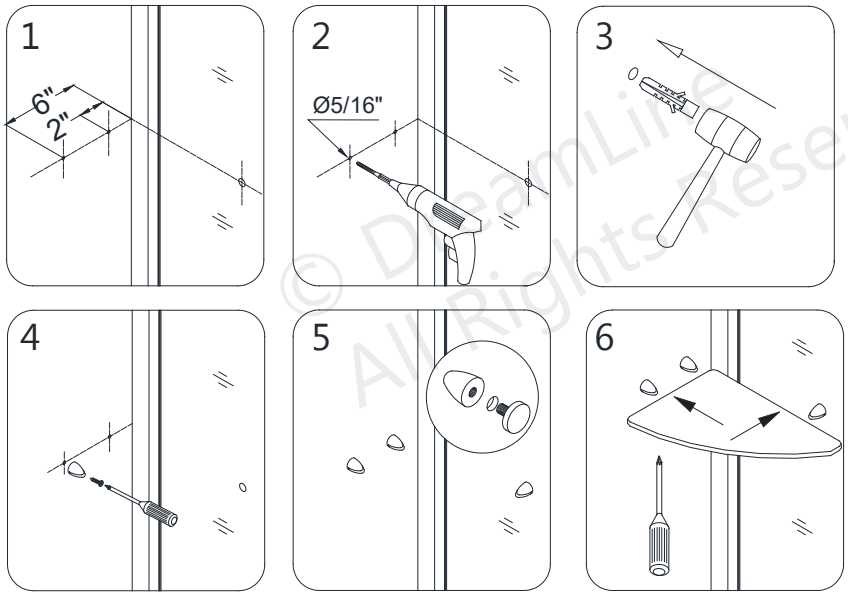

Fig 10a

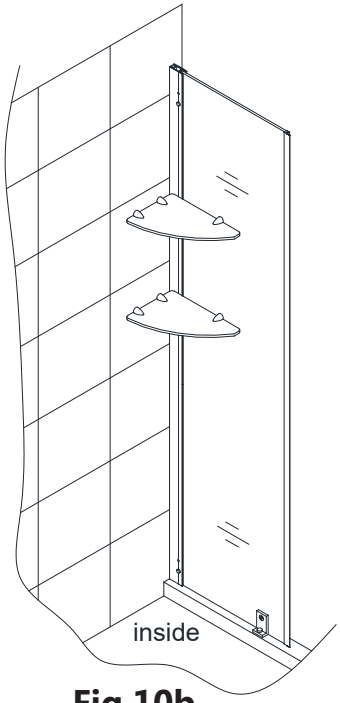

Fig 10b

Do Not let go of the shelf during installation until all set screws are secured.

©2018 DreamLine. All Rights Reserved

Allow 24 hours for the silicone to fully cure before using the shower. (Fig 11)

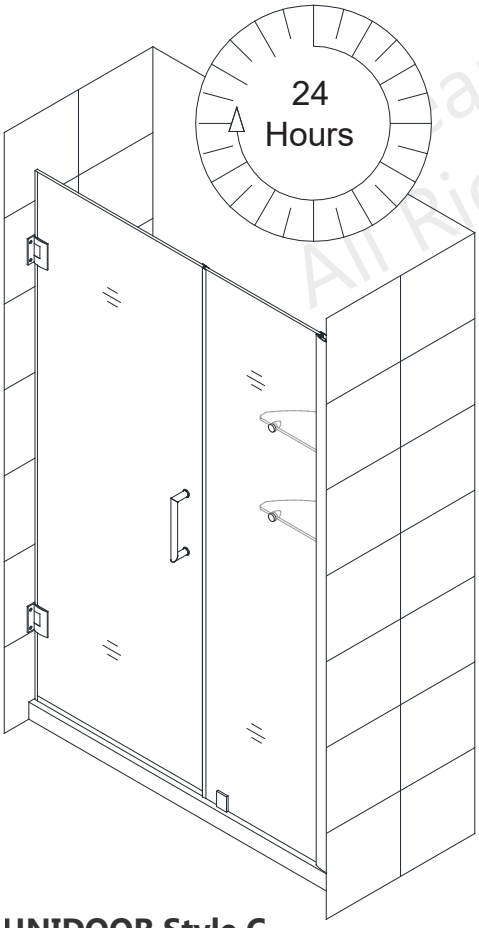

UNIDOOR Style C

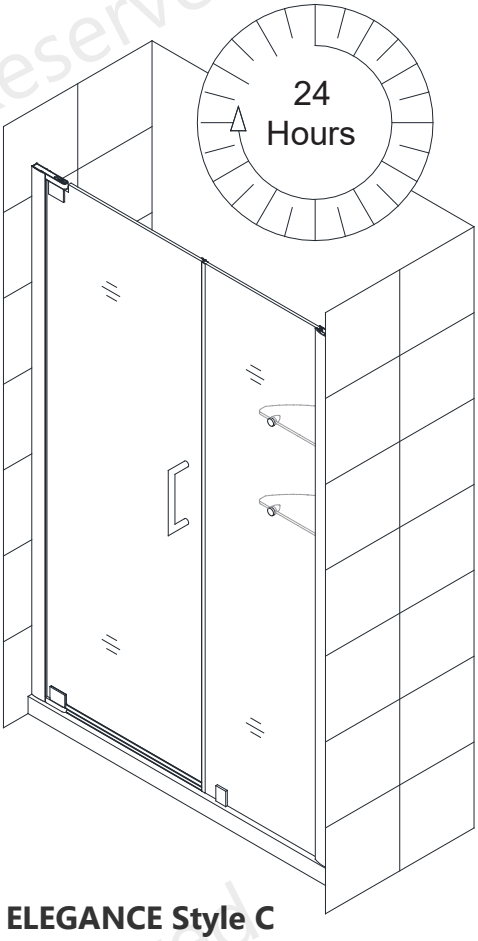

ELEGANCE Style C

Fig 11

Right-Hand panel installation shown

© DreamLine
All Rights Reserved

©2018 DreamLine. All Rights Reserved

Product Maintenance

BASES and BACKWALLS: To ensure long-lasting life for your acrylic back walls, wipe them off after each use with a soft cloth. To clean the acrylic back walls use non-abrasive sprays or cream based cleaners. Avoid the use of aerosol spray cleaners. Never use abrasive cleansers, metal brushes or scrapers that could scratch or dull the surface.

GLASS: To ensure long-lasting life for your glass shower products, wipe them off after each use with a soft cloth. Rinse and wipe off the glass using either a soft cloth or a squeegee to prevent soap buildup and water spots (Hard water can etch the surface of the glass over time if left to dry). To prevent scratching the surface: never use abrasive cleaners or cleaning products that contain scouring agents. Never use bristle brushes or abrasive sponges that may scratch the surface.

HARDWARE: To ensure a long-lasting finish, wipe off the metal parts after each use with a soft cloth. Do not use abrasive cleaners or cleaning products containing ammonia, bleach or acid. If accidentally used, rinse the surface as soon as possible to prevent damage to the finish (peeling or corrosion). After cleaning the polished finishes, rinse thoroughly and wipe dry with a soft cloth.
Clean stainless steel surfaces at least once a week. When applying stainless steel cleaner or polish to stainless steel hardware, work with (not across) the grain. Never use an abrasive sponge or cloth, steel wool or wired brush as these may permanently scratch the surfaces.

NOTE: To maximize the life of your door, it is important to regularly inspect the glass and all hardware for misalignment, proper attachment, and/or damage. Contact DreamLine® with any questions or concerns.

DreamLine® shower doors and enclosures are designed not to leak when installed properly and the flow of water is not pointed directly at the hinges or vinyl seals.

© DreamLine
All Rights Reserved

©2018 DreamLine. All Rights Reserved

© DreamLine
All Rights Reserved

DREAMLINE®

THE ULTIMATE SHOWER DOOR

© DreamLine
All Rights Reserved

TEL: 866-731-2244
FAX: 866-857-3638
DREAMLINE.COM

For more information on DreamLine® Shower Doors and Enclosures please visit **DreamLine.com**

©2018 DreamLine. All Rights Reserved