# ROLLING BARN DOOR with FIXED PANEL

## *Shower and Tub Door Installation Instructions*

PLEASE REVIEW THIS ENTIRE MANUAL PRIOR TO INSTALLATION

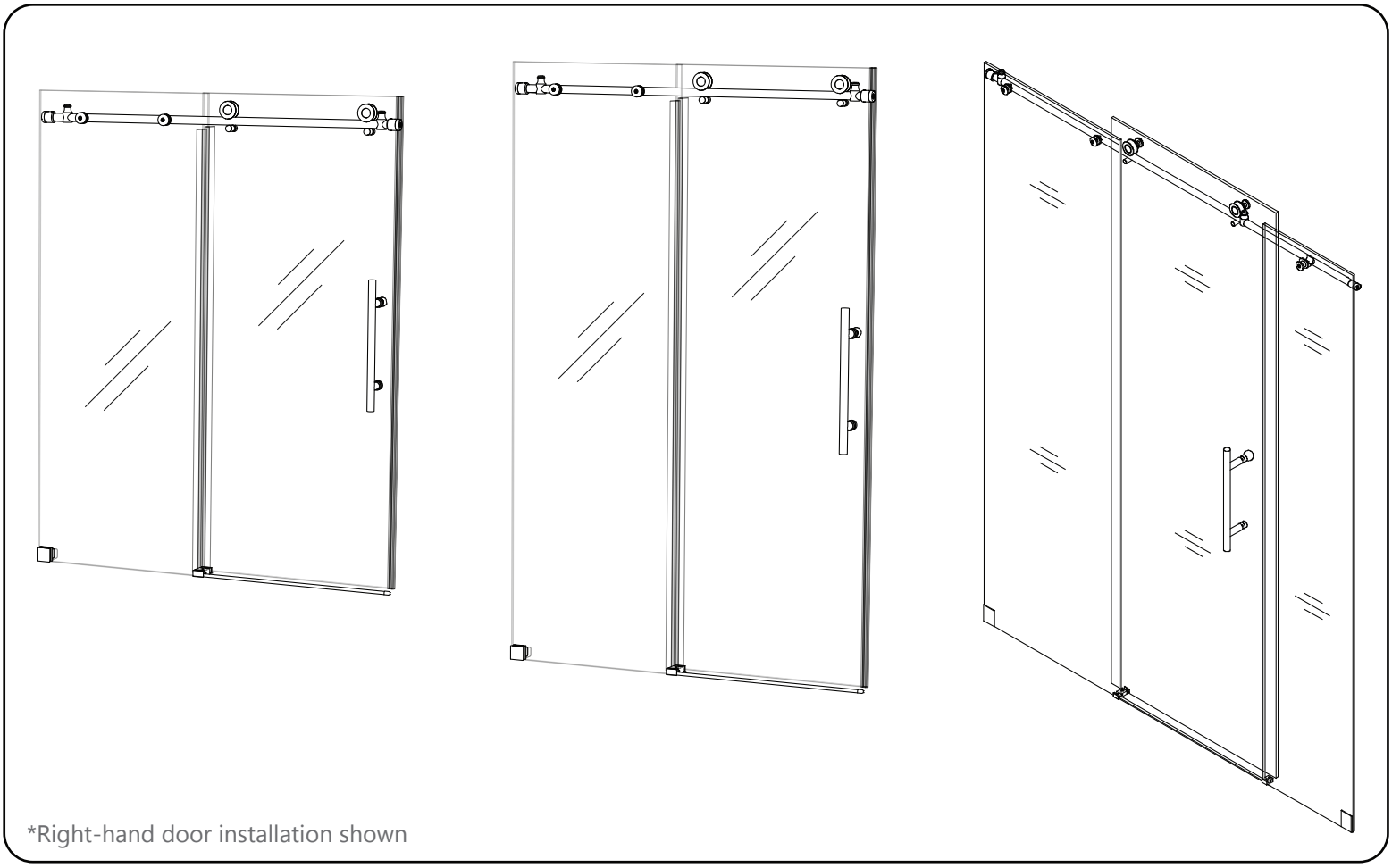

*Right-hand door installation shown

**IMPORTANT!**
The Manufacturer reserves the right to alter, modify or redesign products at any time without prior notice for the purpose of product improvement and customer experience.


©2024 All Rights Reserved

**Do not remove ClearMax stickers until glass is installed.**

ClearMax®

**This model is treated with an exclusive ClearMax™ Glass technology. This is a specially formulated coating that prevents the build up of soap and water spots.**

**Install the surface with the ClearMax™ label towards the inside of the shower. Please note that depending on the model, the glass may be coated on either one or both surfaces.**

**For best results, squeegee the glass after each use and dry with a soft cloth.**

Record the following purchase information for your records:

Purchase Order Number _____

Installation Date _____

Installed By: _____

Store/Vendor Purchased From _____

OD Number (optional) _____
*found on the shipping box or label if available.

SKU Number _____

©2021 All Rights Reserved

# Table of Contents


| Section Title | Page # |
|---|---|
| Order Information | — |
| Warnings and General Preparation | 2 |
| Manual Selection - Single Threshold and Enclosure Return Panel Manual | 3 |
| Important Model Information | 4 |
| Recommended Reinforcement Information | 5 |
| Model Specific Preparation | 6 |
| Tools | 7 |
| Detailed Diagram '**A**' of Shower Door Components & Parts List **A** | 8-10 |
| Detailed Diagram '**B**' of Shower Door Components & Parts List **B** | 11-12 |
| Installation Steps | 13-38 |
| Guide Block Installation | 24-25 |
| Guide Rail Bracket Adjustment | 26 |
| Roller Wheel Assembly Adjustment Procedure | 31-32 |
| Roller Guards | 33 |
| Vinyl Seals & Handle Installation | 34 |
| Door Stopper Installation | 35 |
| Bumper Installation | 36,37 |
| Product Maintenance | 39 |
| Troubleshooting | 40 |
| Factory Part Information | 41-44 |


## Symbol Legend

TIP **TIP** - for ease of installation.

**CORRECT** - recommended.

NOTE **NOTE** - take note of special feature; additional information.

**INCORRECT** - not recommended.

**REQUIRED** - requires special attention; signifies a warning.

72" MODEL ONLY **72" MODEL ONLY** - denotes parts and special instruction for the 72" model only. (**Not included with the 48" or 60" model**.)

Average Installation Time

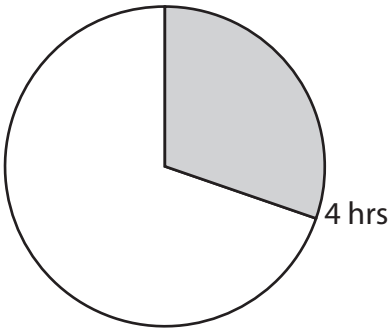


©2021 All Rights Reserved

# Warning Disclosure Statement

©2021 All Rights Reserved

**IMPORTANT**

- The manufacturer reserves the right to alter, modify or redesign products any time without prior notice for product improvement and customer experience.
- This product should be installed by someone familiar with the construction requirements for this type of project and the care necessary for the safe installation and operation of the product.
- The safety of any installation is the responsibility of the installer.
- Professional installation recommended. *(All Models)*
- Professional installation required.
- To prevent damage or serious injury, Do Not lean against the installed panel/door/glass.
- To prevent damage or serious injury: Do Not attempt to lift or move a heavy lite of glass alone. Use an assistant and/or a professional grade glass suction cup.
- The installation of some models may require drilling down into the threshold. Contact the manufacturer of the base, tub, or threshold material with any questions regarding the drilling of holes into their product.
- All drawings in this installation manual are for illustrative purposes only and are not drawn to scale.

**TEMPERED GLASS WARNING**

- Your Shower Door Glass Could Shatter Without Warning if Improperly Installed or Mishandled
- Do Not install or operate a shower door if the glass has chipped corners, slivered edges or is otherwise damaged and/or has been dropped or banged into a hard surface such as tile, marble or glass.
- **The main causes of tempered glass breakage are:**
  - Improper handling, storage or installation
  - Misuse/abuse
  - Lack of maintenance
  - Failure to replace damaged glass
  - **Improper handling during storage, unpacking and installation:**
  - Corners and edges are the most susceptible area to damage on a lite of tempered glass and should be protected and handled with care during storage, unpacking, installation and operation. A concentrated point of pressure or impact with a surface harder than itself may cause the tempered glass to shatter. The tempered glass may release immediately, within several hours or even days later.
  - **Incorrect installation of door hardware, rollers, hinges, channels, stopper or glass:**
  - Improper installation may include: loose hardware and/or lack of proper gaskets between the hardware and glass. Additionally, improper alignment of guide rails, wall profiles or other hardware during installation or operation may place stress on the glass edges and cause it to break.
  - This product must be installed by a professional and experienced installer familiar with the safe handling of tempered glass.
  - **Improper use of this product:**
    - Aggressively opening or closing the door may cause trauma to the glass, which can lead to breakage. This may occur immediately or hours or even days later.
    - **The shower door hardware and glass should be inspected periodically:**
      - Instruct the homeowner how to perform a periodic inspection of the shower hardware and glass - some minor adjustments may be necessary based upon the use (or misuse) of the shower door. Ensure that the hardware remains tight and that the door alignment and operation are correct. Any adjustments should be made upon discovery to prevent damage to the product.
      - Additional considerations should be given to the installation of frameless tempered glass products in households with young children or an elderly person due to an increased chance of improper handling. In such cases, alternatives such as shower curtains or grab bars should be considered.

**GENERAL PREPARATION**

- After opening all boxes and packages, read this introduction carefully. Check that all the items are included in the package by marking off the components on the **"Detailed Diagram of Product Components"** page. Examine all boxes and packages for shipping damage. If the unit has been damaged, has a finishing defect, or is missing parts; please contact the manufacturer within 3 business days of the delivery date.
  **Please note that the manufacturer will not replace any damaged products or missing parts free of charge after 3 business days or if the product has been installed.** Please contact the manufacturer if you have any questions.
- **Please note that you should refer to your local building codes with questions on installation compliance standards. Building and plumbing codes may vary by location, and the manufacturer is not responsible for code compliance standards for your project and will not accept any returns on that basis.**
- If this unit is going to be installed in a new construction, install all the required plumbing and drainage before installing the shower. **Use a competent and licensed (if required by local code) plumber for all plumbing installation.**
- Make sure that prior to beginning the installation, the surfaces are leveled and solid and will be able to support the total weight of the unit. Also make sure the walls are at right angles. Irregular installation surface level, radius corners or improper angle of side walls will result in serious problems for your installation. Please note that some adjustments and drilling will be necessary during the installation process.
- Protect all primary surfaces of the product during installation. Never set your glass down directly onto a tile floor. Leave corner protectors in place until it is necessary to remove them. Always use a piece of wood or cardboard to protect the bottom edge and corners of the glass prior to and during installation.
- This unit must be installed upon a finished threshold and against finished walls.
- *Shower doors are not designed to be installed into a fiberglass surround due to the radius corners and lack of a solid surface to mount the hardware.*

**WARNING: TO AVOID THE RISK OF DAMAGE OR INJURY:**

- **Follow all recommendations and requirements as shown in the installation instructions.**
- Perform a thorough inspection of the glass and all parts for any damage prior to installation. Any damage to tempered glass can cause breakage.
  **Do Not install damaged glass!**
- Do Not install or operate a shower or tub door if the glass has chipped corners, slivered edges or is otherwise damaged. Do Not install or operate a shower or tub door that has been dropped or banged into a hard surface such as tile, marble or glass.
- **CAUTION:** Contact with any hard surface can damage tempered glass and cause it to shatter.
- This product uses tempered glass. Glass cannot be cut after it has been tempered.
  **Do Not attempt to cut tempered glass.**
- Glass Shower doors, Tub doors, Inline panels, and Return panels can shatter due to improper handling or lack of maintenance. Conduct periodic inspections of glass and all parts for possible damage, missing or loose parts.
- Always wear proper safety equipment such as: safety goggles, work gloves and appropriate footwear during the installation process.
- **WARNING. Risk of leakage and/or damage.** Follow all instructions regarding the application of silicone sealant or caulk. Allow 24 hours for the sealant to cure before the initial use of the shower or tub product. Follow the silicone manufacturer's recommendations regarding the use of their product.

- **Thoroughly read these instructions before installing or using this product.**
- **Leave this manual for the end-user of the product.**

This product should be installed by someone familiar with the construction requirements for this type of product and the care necessary for the safe installation and operation of the product.

# Manual Selection

**IMPORTANT!** This manual will describe the installation of the single threshold model of the shower door.
**Use this manual when installing the single threshold model.**

NOTE

**<u>For the Enclosure Installation:</u>**
**Start with the Enclosure Return Panel Manual that is packaged with the return panel glass FIRST**
**for the installation of the return panel glass, then use this manual for the installation of the door section.**

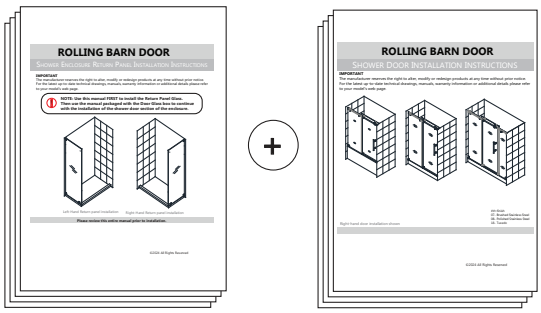


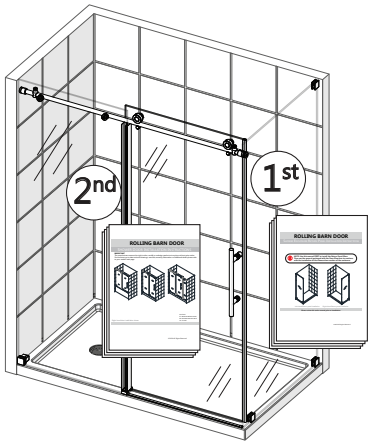


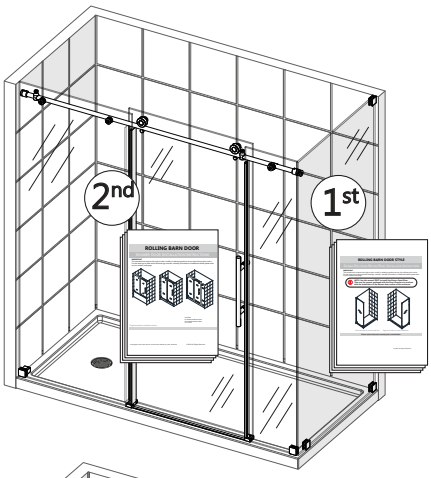


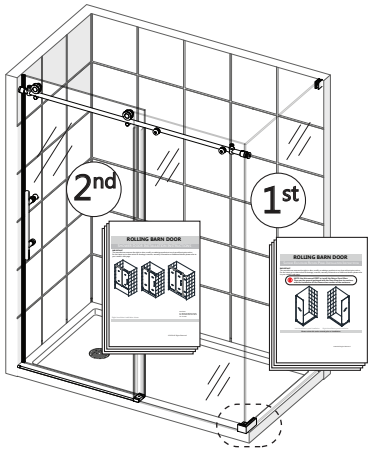


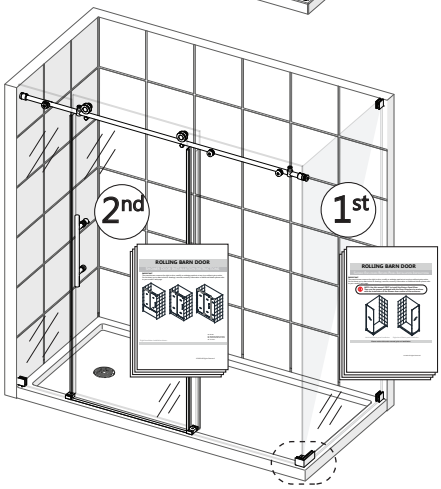


©2021 All Rights Reserved

# Important Model Information

©2024 All Rights Reserved

**IMPORTANT INFORMATION REGARDING THE INSTALLATION OF THIS SHOWER DOOR**

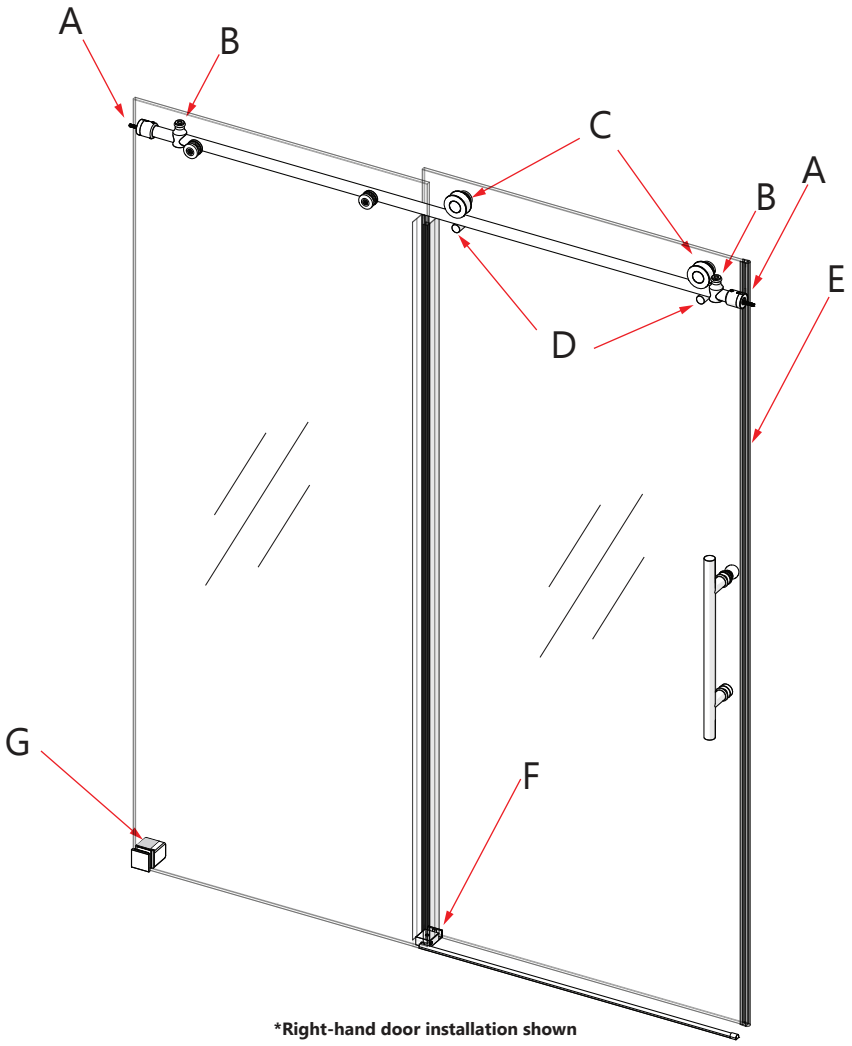


*Right-hand door installation shown

**A** **Guide Rail Brackets must be firmly attached to the wall**. Installation into a stud is strongly recommended.
All of the guide rail bracket set screws must be accessible and tightened.

**B** **Thread Lock must be applied to the set screws in both stoppers.**
**Panel-side stopper must be installed into the pre-drilled stopper hole in the upper guide rail.**
**Door-side stopper must be installed at the proper position to prevent the door from contacting the wall.**

**C** **Roller Wheel Assembly safety set screws: must be accessible and must be retightened with Thread Lock during installation.**

**D** **Roller Guards** must be postioned within 1/16" of the Upper Guide Rail and secured with Thread Lock.

**E** **Bulb Vinyl Seal** must be installed on the closing edge of the Door Glass.

**F** The **Guide Block** must be screwed to the threshold and installed square with the Panel Glass and Door Glass. Installing the guide block crooked may damage the bottom edge of the Door Glass and lead to breakage.

**G** **Bumper** must be secured in position with 3M ™ tape or screwed to the wall.

# Recommended Reinforcement Information

Install studs **OR** install 2”x 6” wood blocking between the studs where the Guide Rail Brackets will attach to the wall

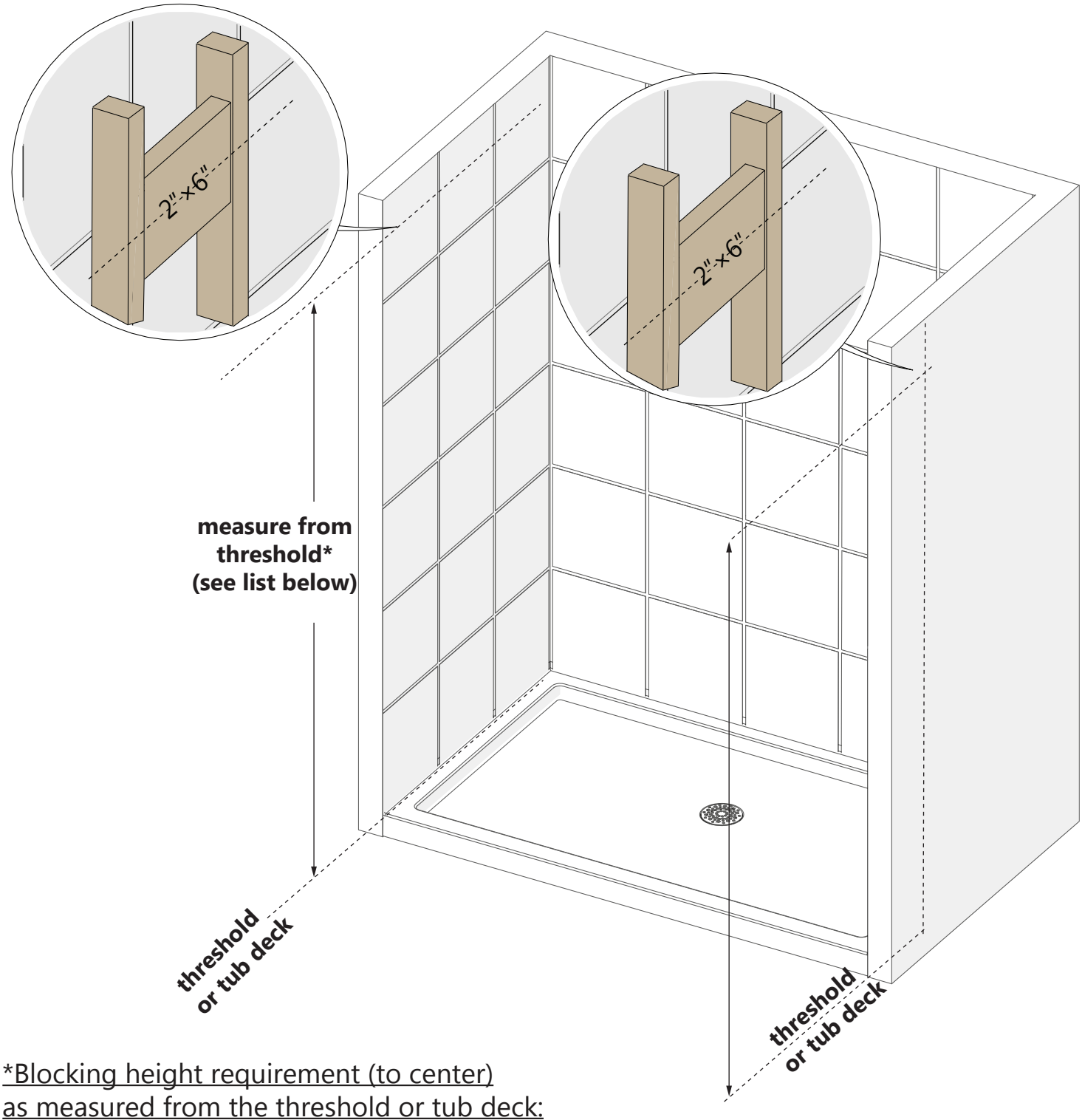


<u>*Blocking height requirement (to center)</u>
<u>as measured from the threshold or tub deck:</u>
73” for shower ht / 59” for tub ht
**72-1/2” for shower ht / 58-1/2” for tub ht**
73-1/2” for shower ht / 59-1/2” for tub ht
75-1/2” for shower ht only

©2024 All Rights Reserved

# Model Specific Preparation

## REQUIRED:

No Out-of-Plumb Adjustment; Verify threshold and walls with a level

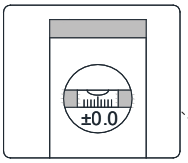


Threshold must be level

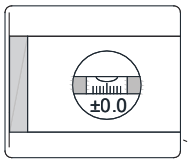


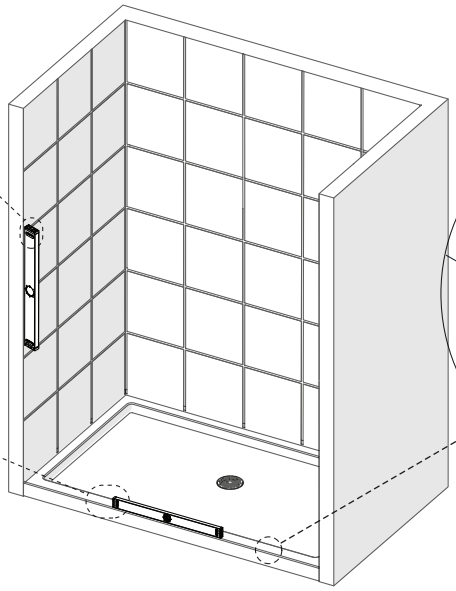

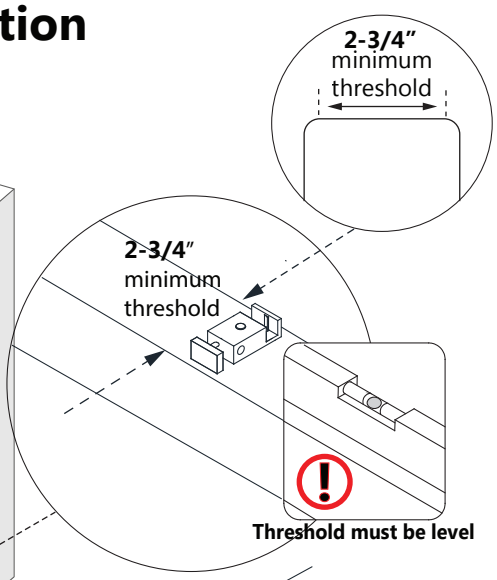


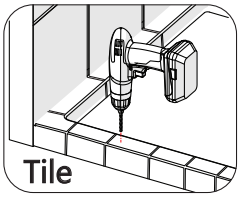


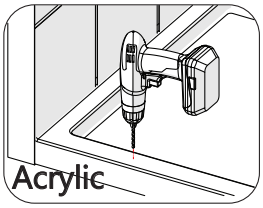


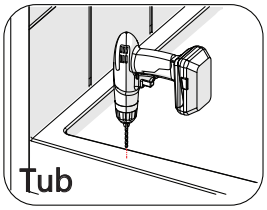


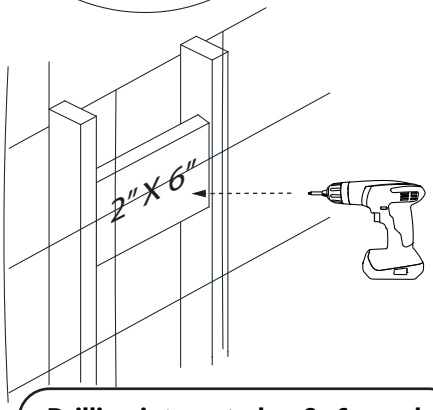


TIP

Contact the manufacturer of the base, tub or threshold material with any questions regarding the drilling of holes into their product.

Drilling into a stud or 2×6 wood reinforcement is recommended. *see page 5 for more information

**DO NOT** hang or drape a towel or wash cloth over the guide rail as this may cause the roller assemblies to get stuck and possibly cause serious damage or injury.

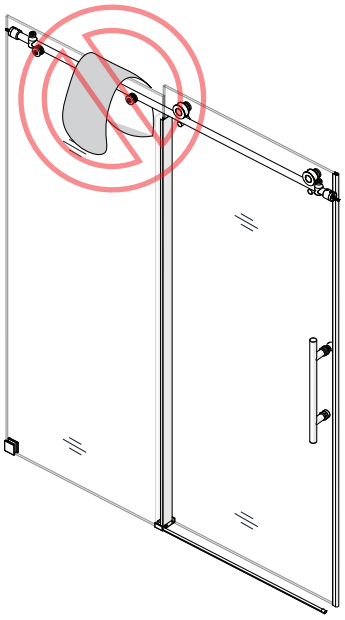

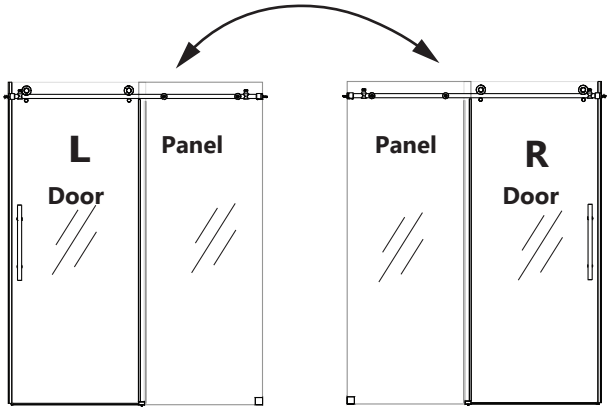


NOTE

This model is reversible for right or left-hand door installation. The right-hand door installation is shown as an example throughout this manual. For the left-hand door installation, simply begin on the opposite wall and reverse the orientation of the steps shown.

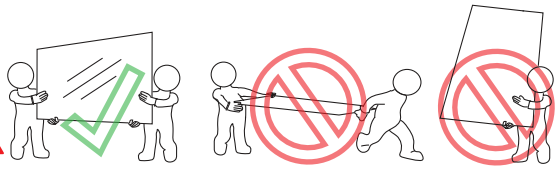

This door requires professional installation. Two installers recommended.

©2021 All Rights Reserved

# Tools

Level

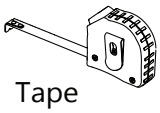
Tape Measure

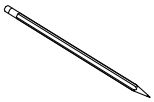
Pencil

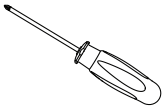
Phillips Screwdriver

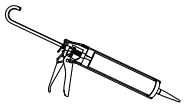
Silicone

Power Drill

Drill Bit Ø1/8" (3mm)

Drill Bit Ø3/16" (4mm)

Drill Bit Ø1/4" (6mm)

Drill Bit Ø5/16" (8mm)

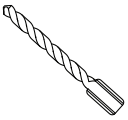
Drill Bit Ø3/8" (10mm)

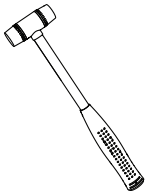
Soft Head Hammer

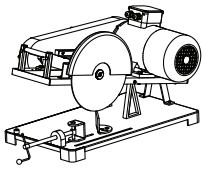
Chop saw**

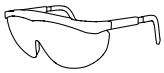
Safety Glasses

Work Gloves

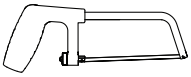
Hacksaw**

**Use the proper saw blade to cut stainless steel.

Painter's Tape

Razor Knife

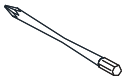
Extender Driver Bit

#3 Phillips Driver Bit

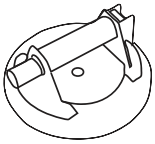
Professional-grade Glass suction cup

**Threshold must be level; Walls must be plumb.**

**Measure the finished opening before proceeding with the installation to be sure that the correct model size has been ordered.**

TIP

**Be sure to cover the shower drain to prevent losing small parts.**

NOTE

Unpack your unit carefully and inspect it. Lay it out and identify all parts using the **Detailed Diagram(s)** on pages **8** and **11**; and packing list in this manual as a reference. Before discarding the carton, check for small hardware bags that may have fallen to the bottom of the box. If any parts are damaged or missing, please contact the Manufacturer for replacement. The shipping boxes may contain extra parts not used in your model configuration. Retain these installation instructions for future reference.

NOTE

These instructions will show the installation of the shower door. Please follow the same steps for the installation of the tub door.

©2021 All Rights Reserved

# Detailed Diagram ‘A’of Shower Door Components

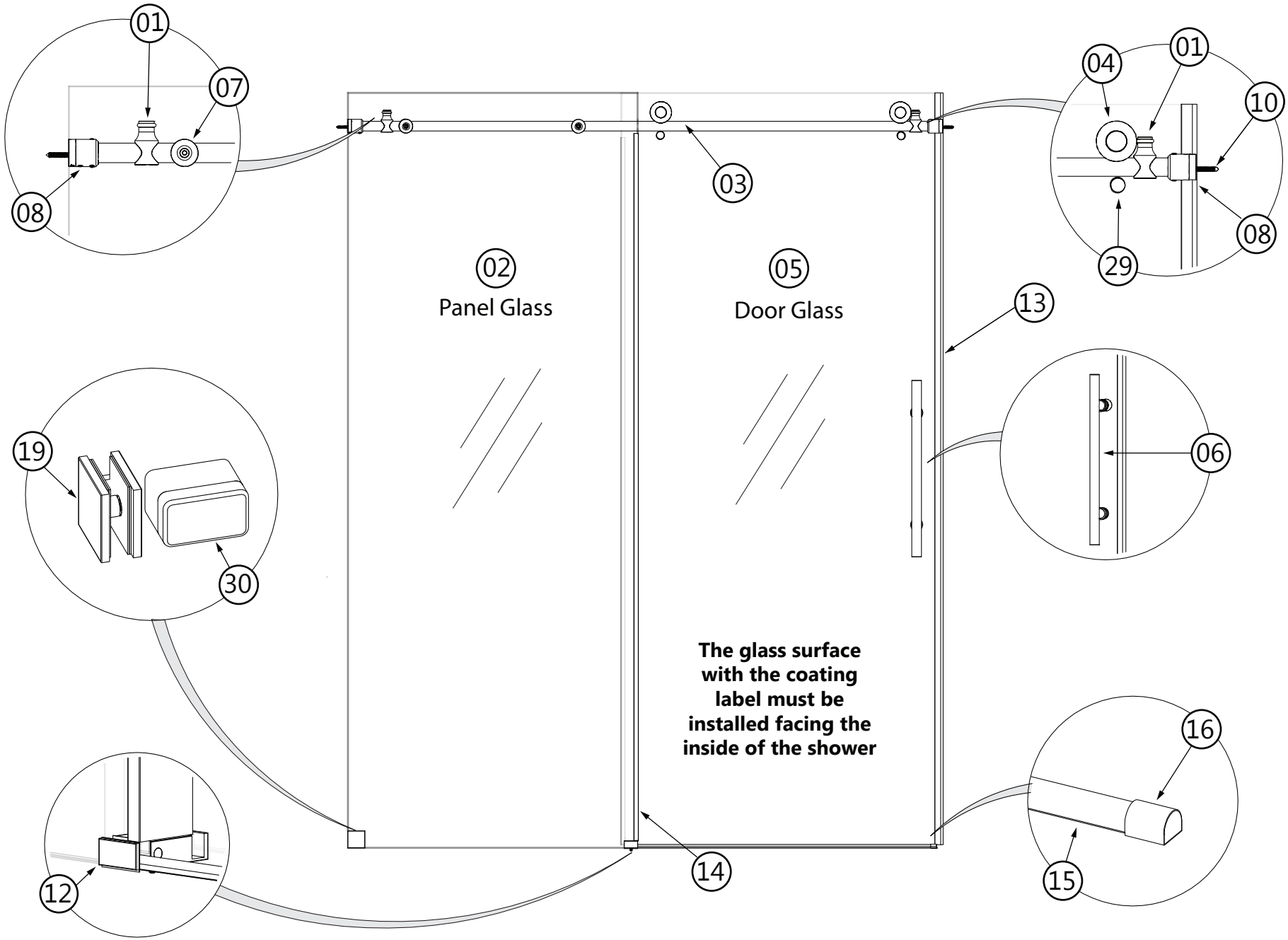


*Right-hand door installation shown.

©2024 All Rights Reserved

# Parts List A

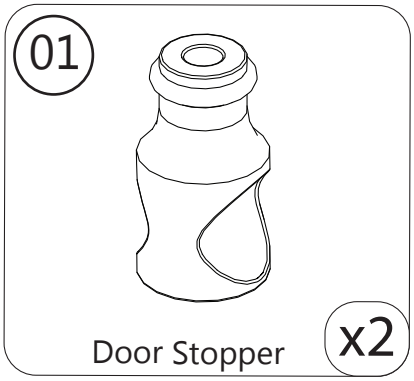


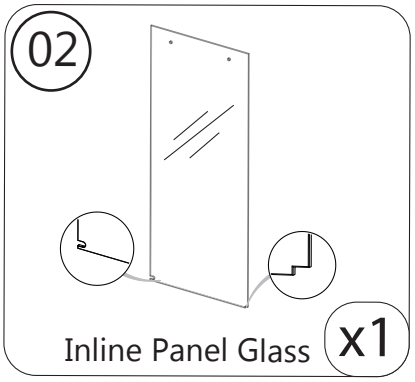


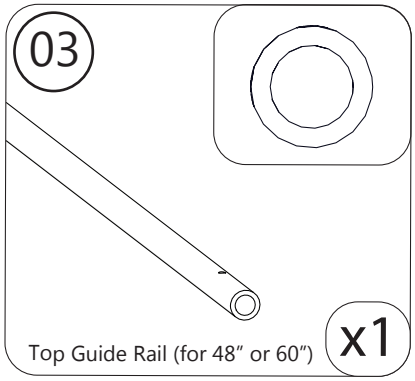


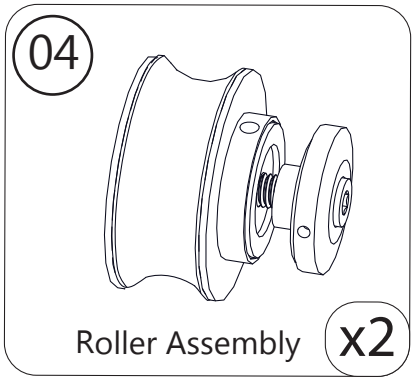


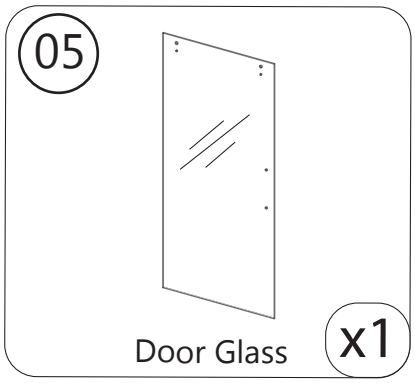


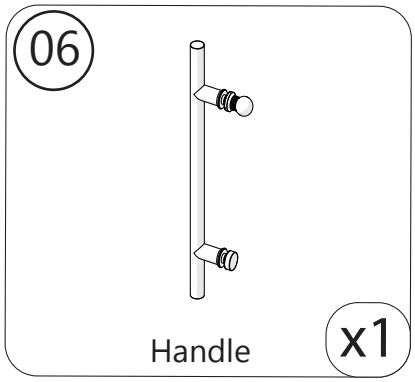


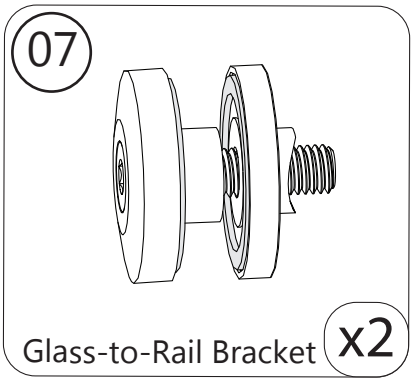


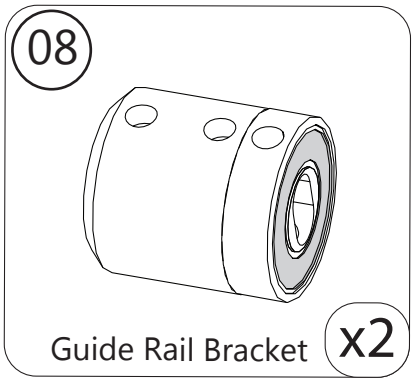


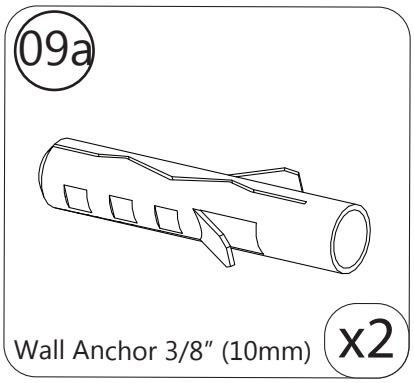


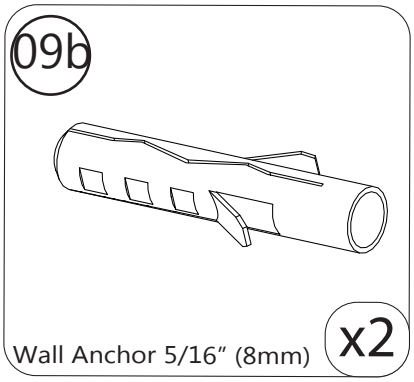


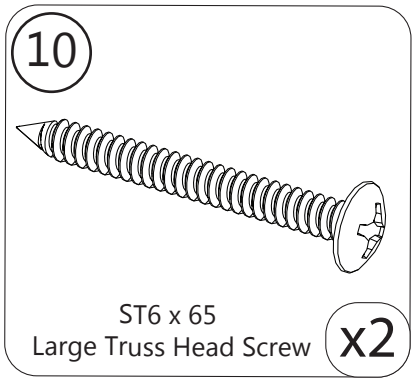


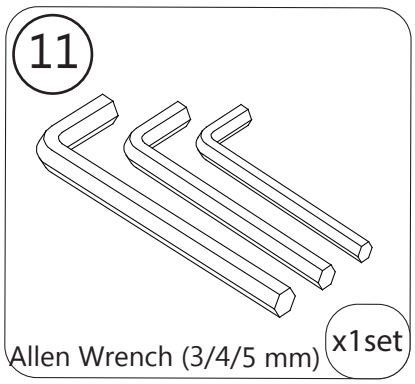


*All drawings in this manual are for illustrative purposes only and are not drawn to scale.

©2024 All Rights Reserved

# Parts List A

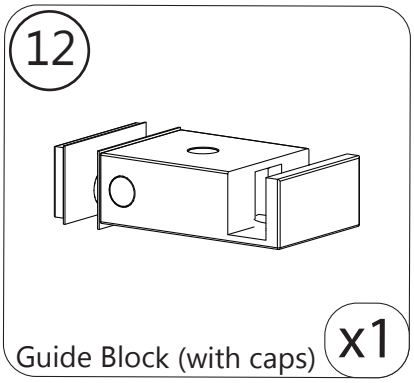


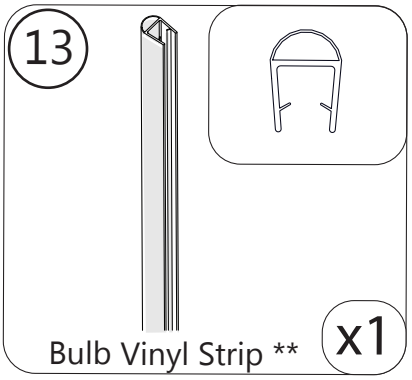


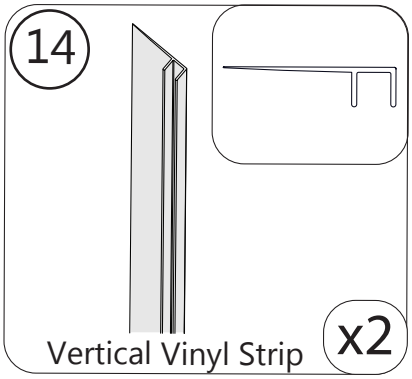


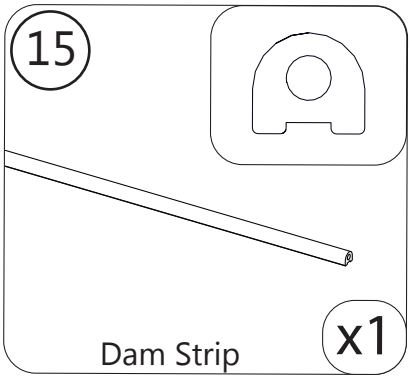


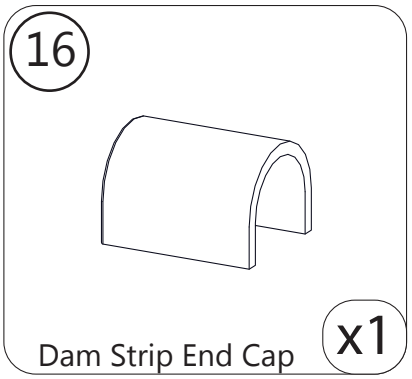


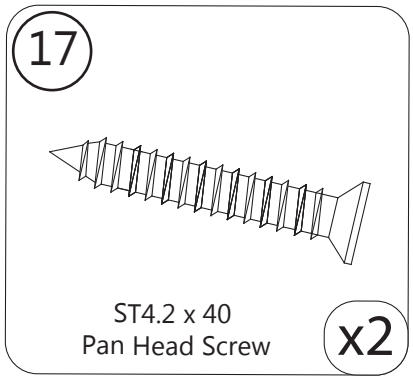


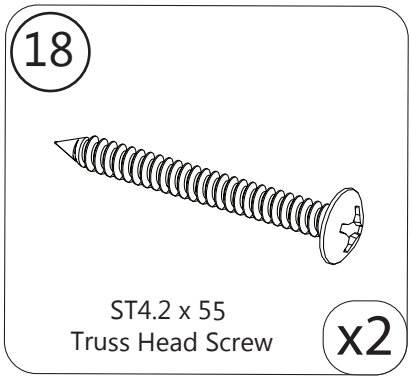


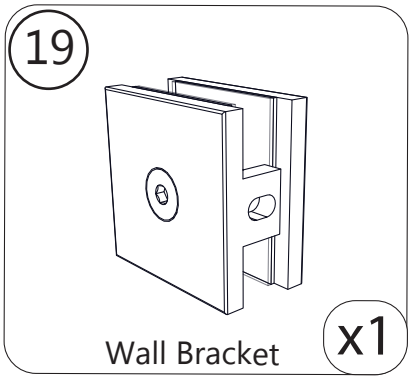


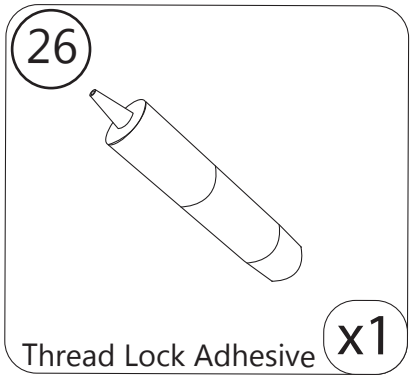


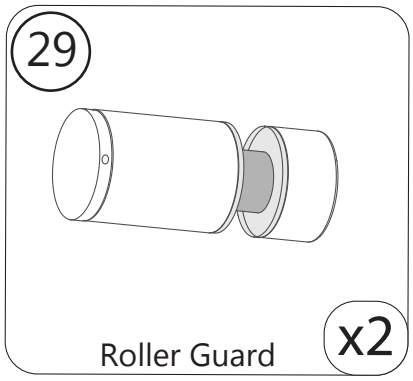


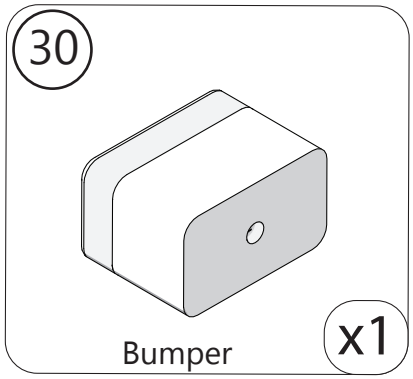


©2021 All Rights Reserved

# Detailed Diagram 'B' of Shower Door Components (72" Model Only)

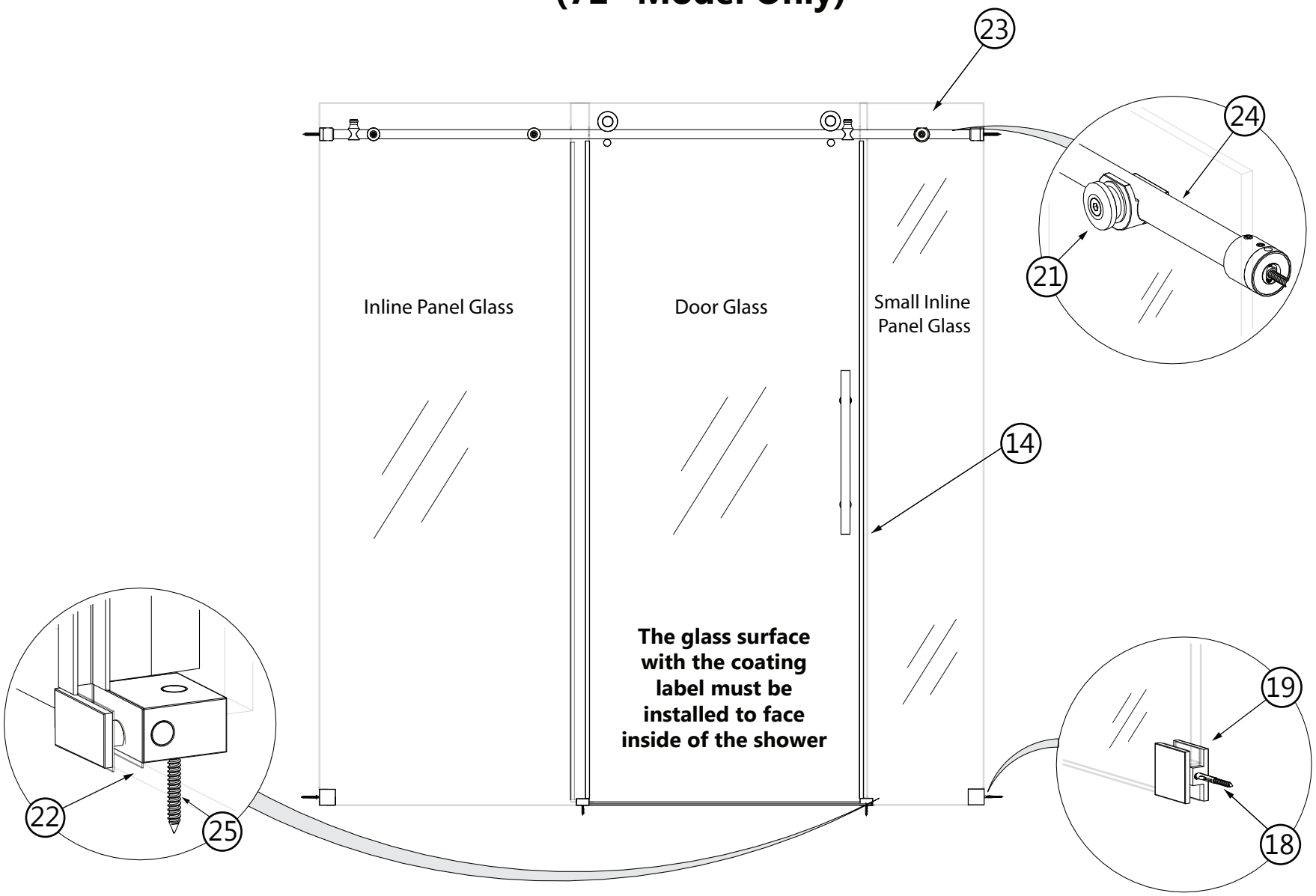


*Right-hand door installation shown.



©2024 All Rights Reserved

# Parts List B
# (72" Model Only)

72" MODEL ONLY

©2021 All Rights Reserved

09b

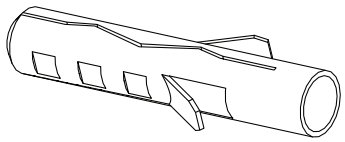

Wall Anchor 5/16" (8mm) x2

11

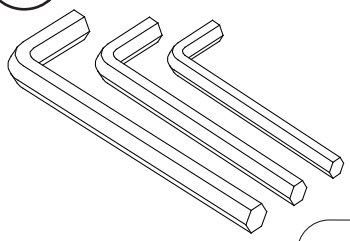

Allen Wrench (3,4,5 mm) x1set

14

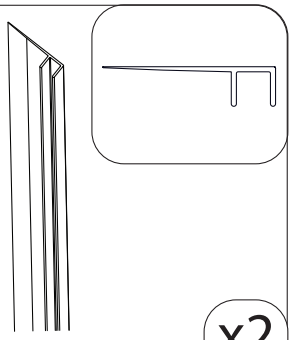

Vertical Vinyl Seal x2

18

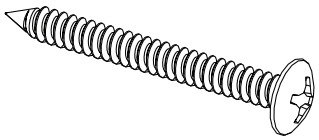

ST4.2 x 55
Truss Head Screw x1

19

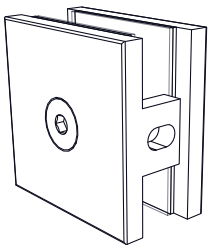

Wall Bracket x1

21

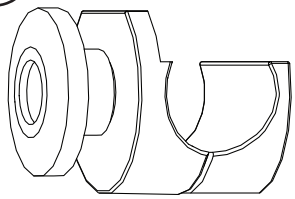

Glass-to-Rail Bracket x1

22

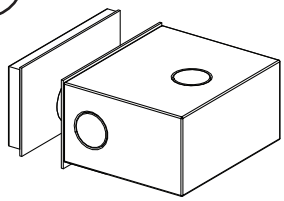

Small Inline Panel Glass
Bottom Bracket x1

23

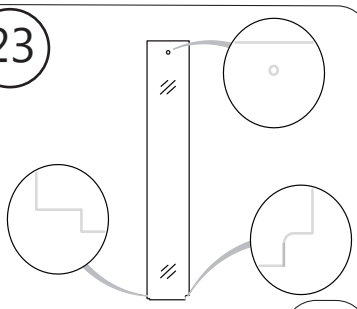

Small Inline Panel Glass x1

24

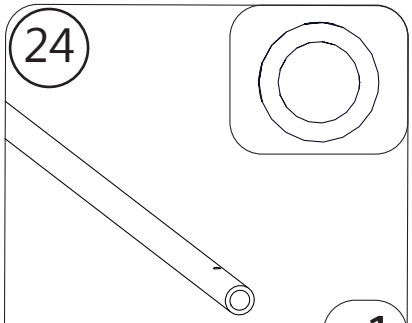

Top Guide Rail (for 72") x1

25

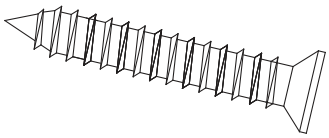

ST4.2 x 40
Countersunk Screw x1

*All drawings in this manual are for illustrative purposes only and are not drawn to scale.

# Installation Steps

**1**

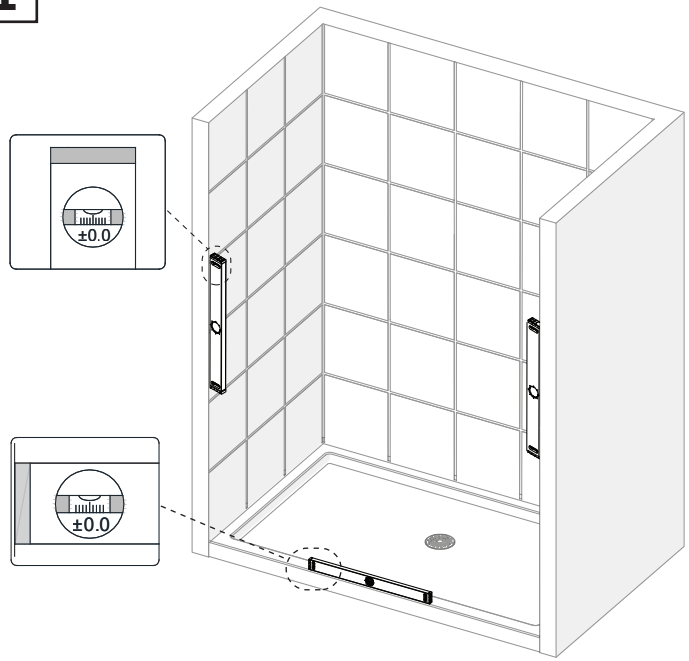


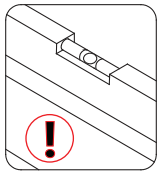

**Threshold must be level**

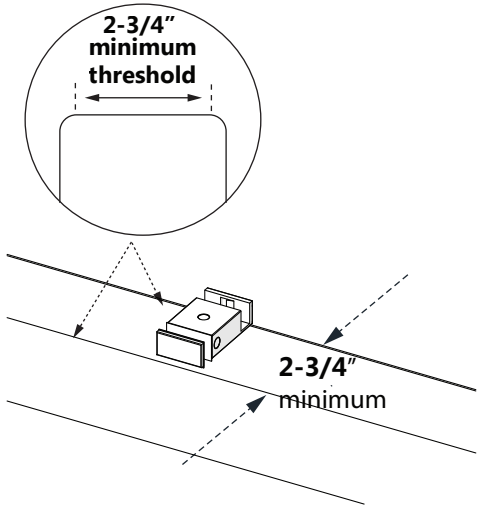


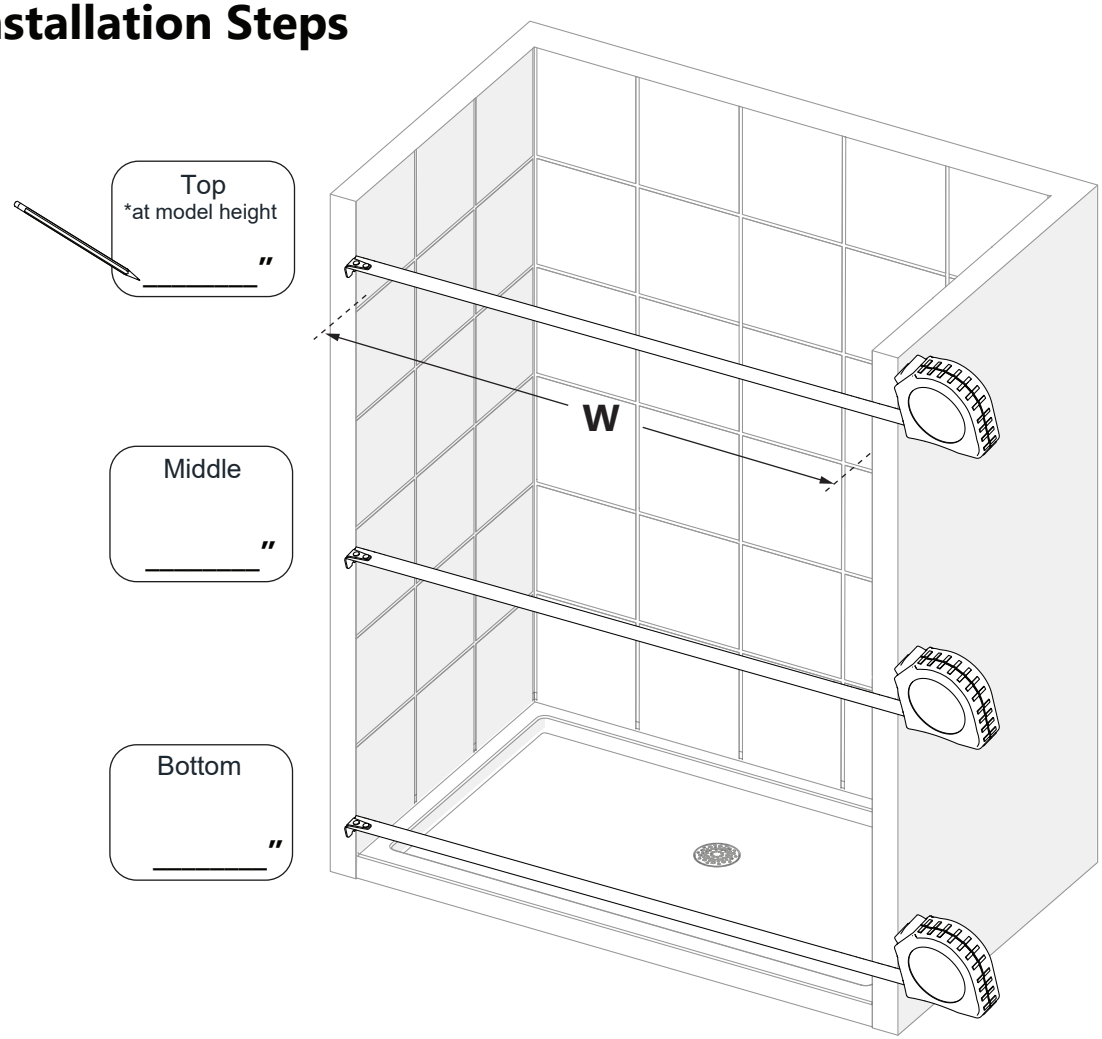


**NOTE**

The minimum threshold requirement for the model is **2-3/4" of flat threshold space**.

**Tools Needed**

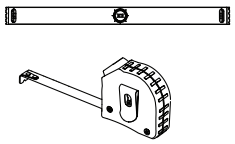



©2024 All Rights Reserved

**2**

**The length to cut-off from the door side of the Top Guide Rail (#03) will be (L):**

**Model Width (-) Finished Opening (W) = Cut-off Length (L)**

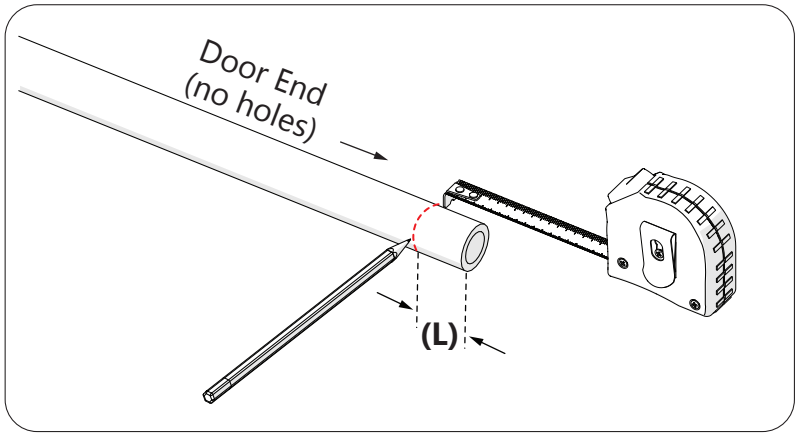


**Fig 2**

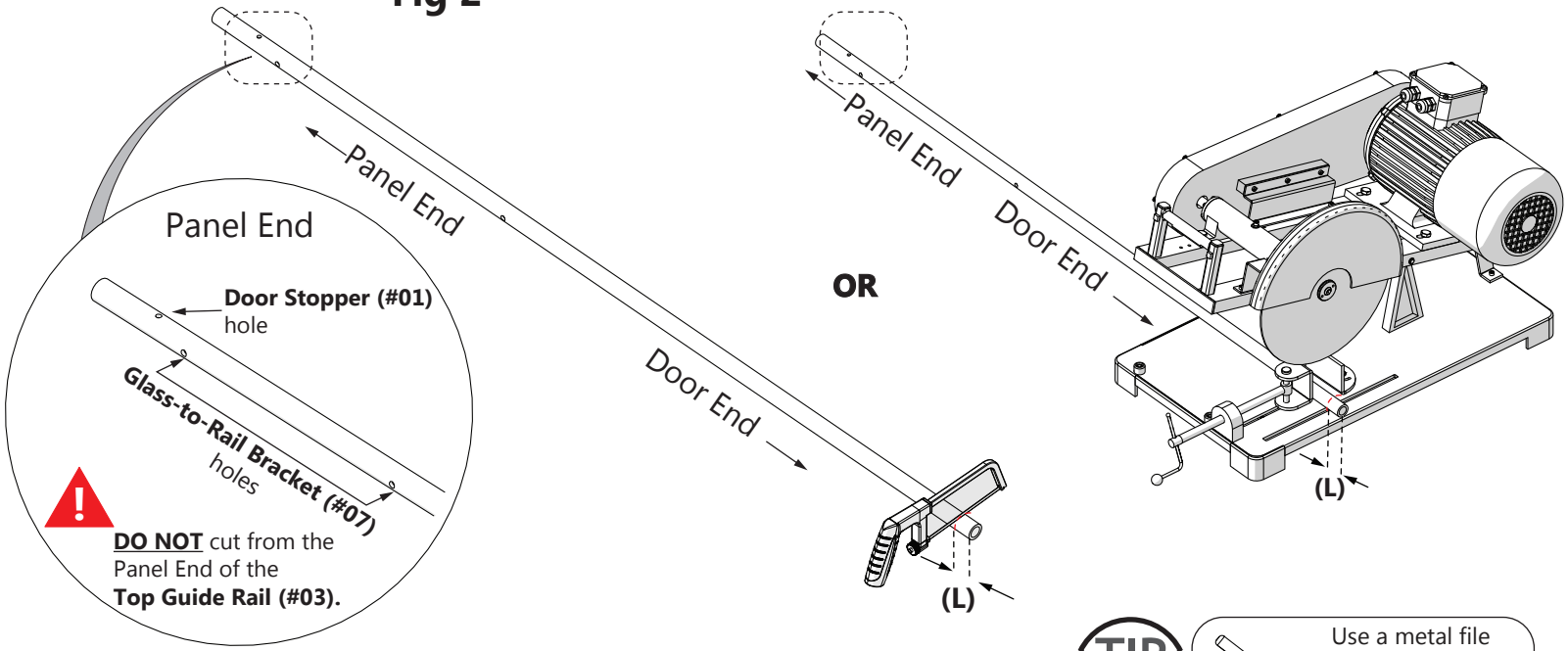


**Parts Needed**

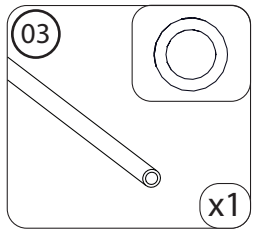


**OR**

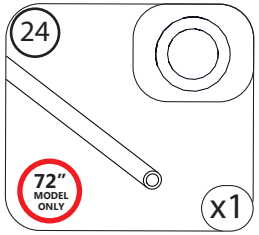


**Tools Needed**

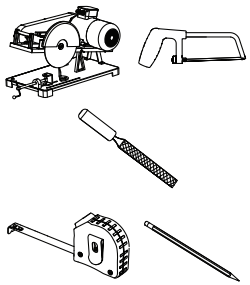

**TIP**

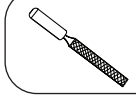

Use a metal file to deburr the cut end

**NOTE**

**The Top Guide Rail (#03) has been pre-cut for the model width of: 48”, 60”, 72”.**
**(The actual rail is shorter than the model width by design to account for the guide rail brackets.)**
Cut the **Top Guide Rail (#03)** from the door end **only**, which is the end that is farther from the **Glass-to-Rail Bracket (#07)** holes. **DO NOT** cut from the panel end of the **Top Guide Rail (#03)**.



©2024 All Rights Reserved

**3**

Panel-end **Door Stopper (#01)** hole

07 08 01 inside outside

door end

07

Inline Panel Glass

01 08

19 outside

**Fig 3**

Glass-to-Rail Bracket

07

Adjustment disk

Door end of guide rail

High spot of Adjustment Disk bushing

## Parts Needed

01 x2

02 x1

03 x1

07 x2

08 x2

11 x1set

19 x1

TIP

Find and mark the location of the high spot on the outer surface of the adjustment disk with a felt tip pen to make adjustment easier to see.

NOTE

The outer **Glass-to-Rail Bracket (#07)** disk has an eccentric bushing for adjustment. Be sure to install both Glass-to-Rail Bracket disks with the high spot of the bushing pointed towards the door end of the guide rail.

## Tools Needed



©2024 All Rights Reserved

4

# (72" Model Only)

72" MODEL ONLY

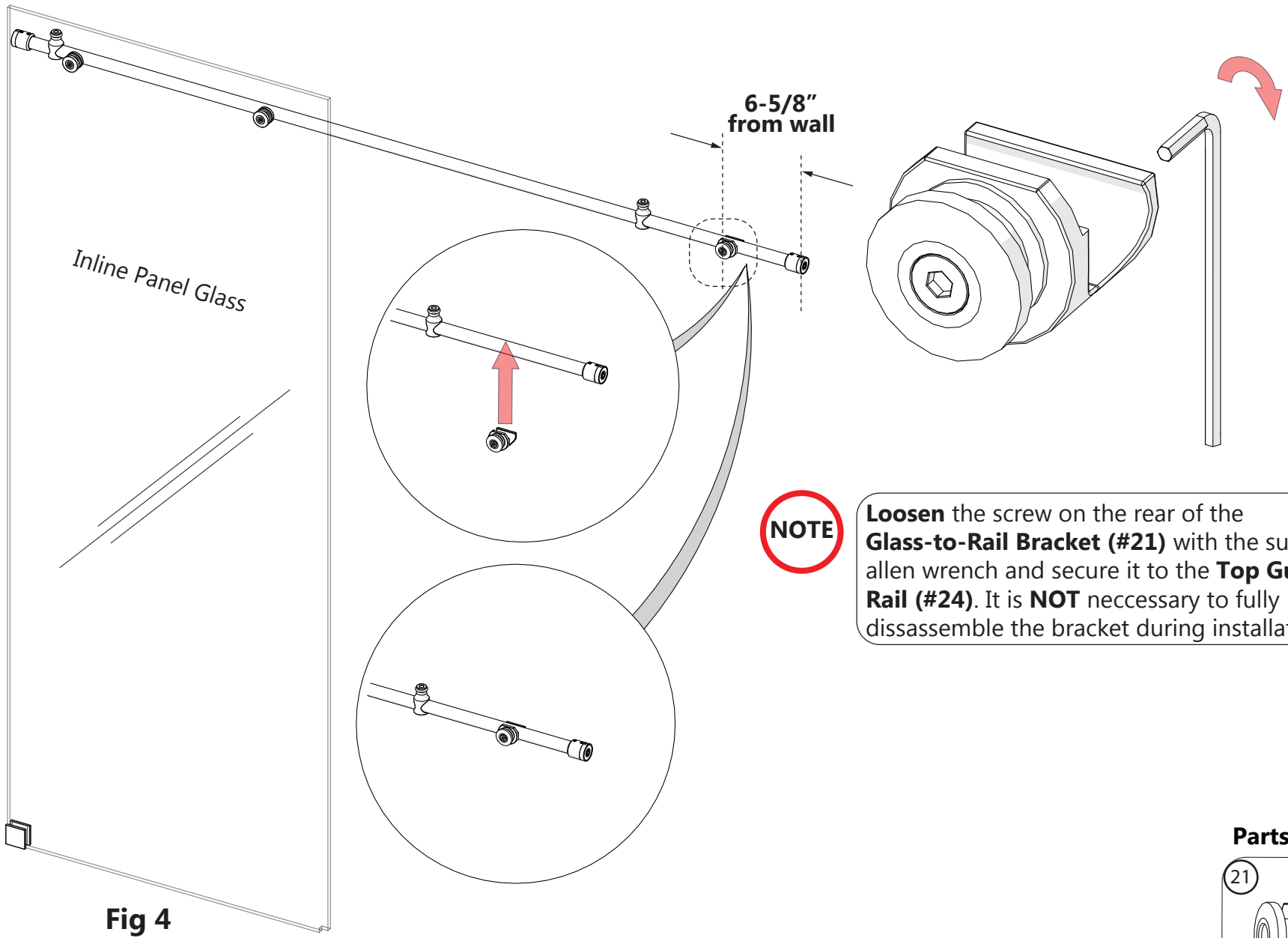


Fig 4

NOTE

**Loosen** the screw on the rear of the **Glass-to-Rail Bracket (#21)** with the supplied allen wrench and secure it to the **Top Guide Rail (#24)**. It is **NOT** neccessary to fully dissassemble the bracket during installation.

**Parts Needed**

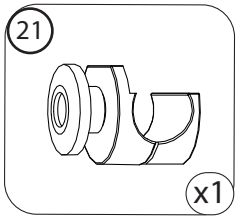




©2024 All Rights Reserved

**5**

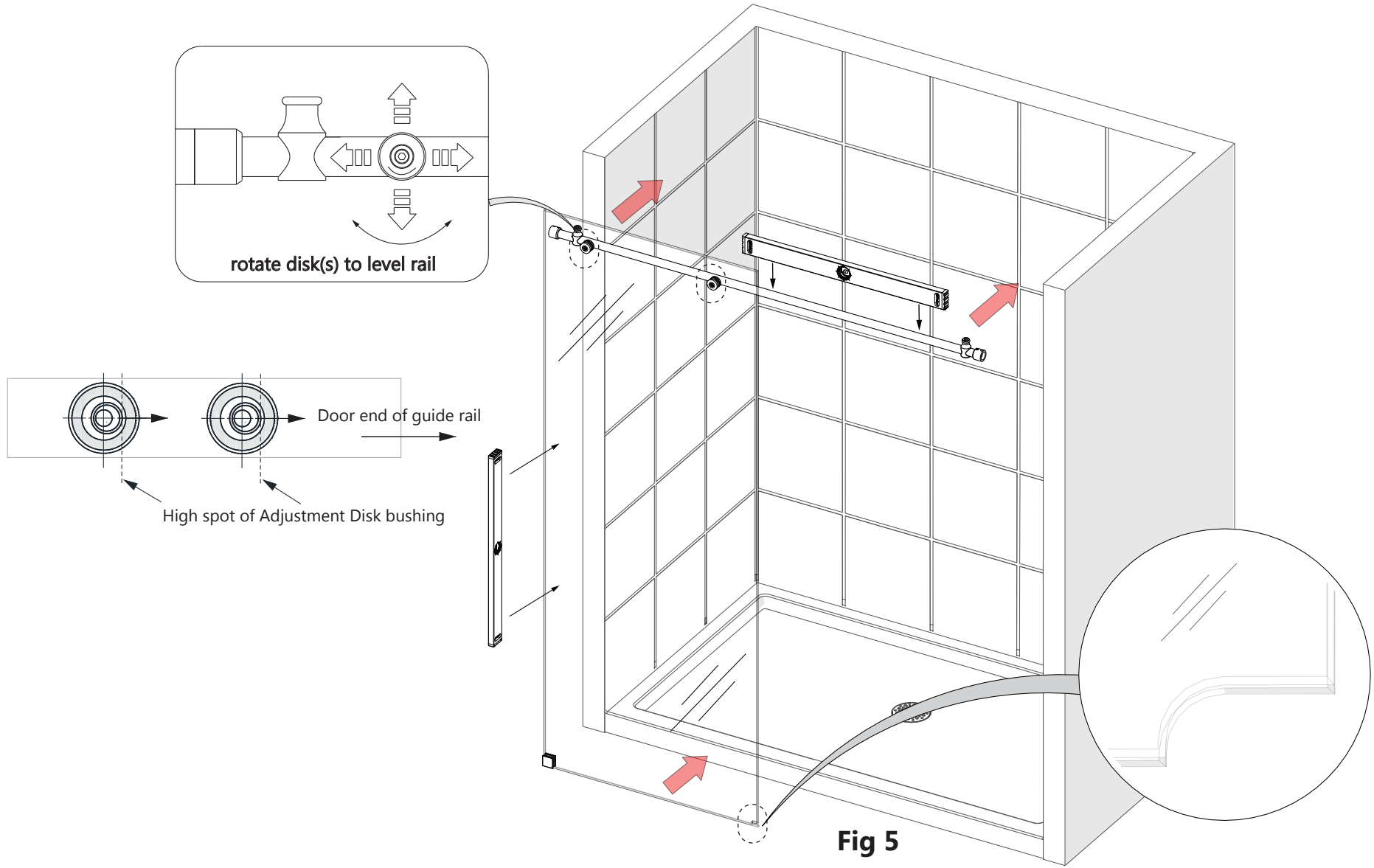


**Fig 5**

**NOTE** The **Panel Glass (#02) must be installed to the outside** of the **Top Guide Rail (#03)**.

**Tools Needed**

©2024 All Rights Reserved

**6**

# (72" Model Only)

**72" MODEL ONLY**

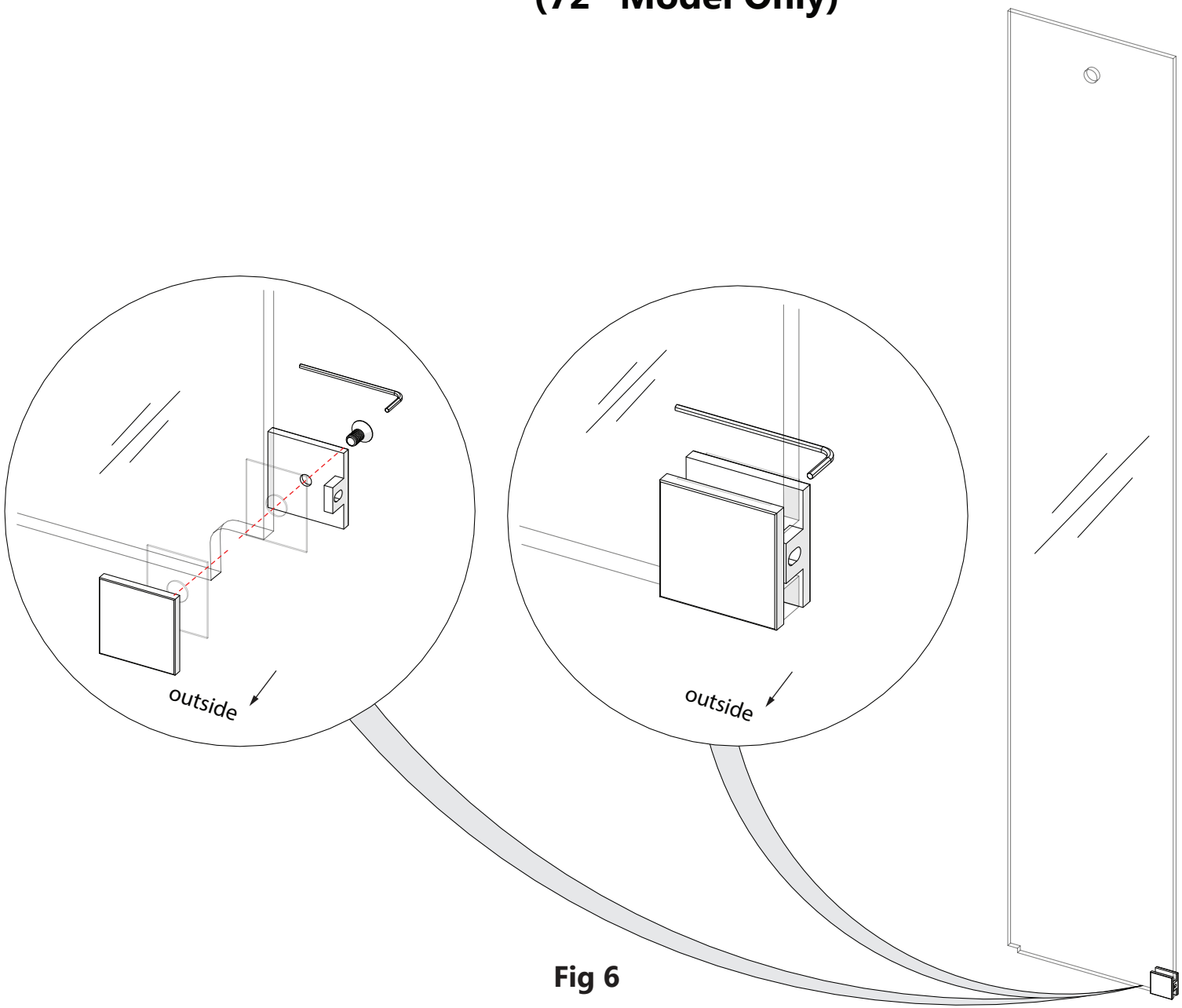


**Fig 6**

**Parts Needed**

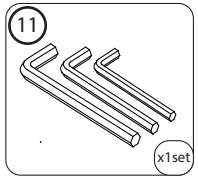


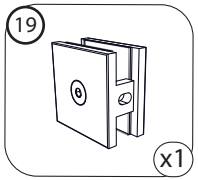


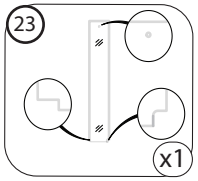


**NOTE**

For **single threshold installation (shown)**, this bracket will be installed into the wall.
For an **enclosure installation only**, this bracket will need to be installed into the threshold.



©2024 All Rights Reserved

**7**

# (72" Model Only)

**72" MODEL ONLY**

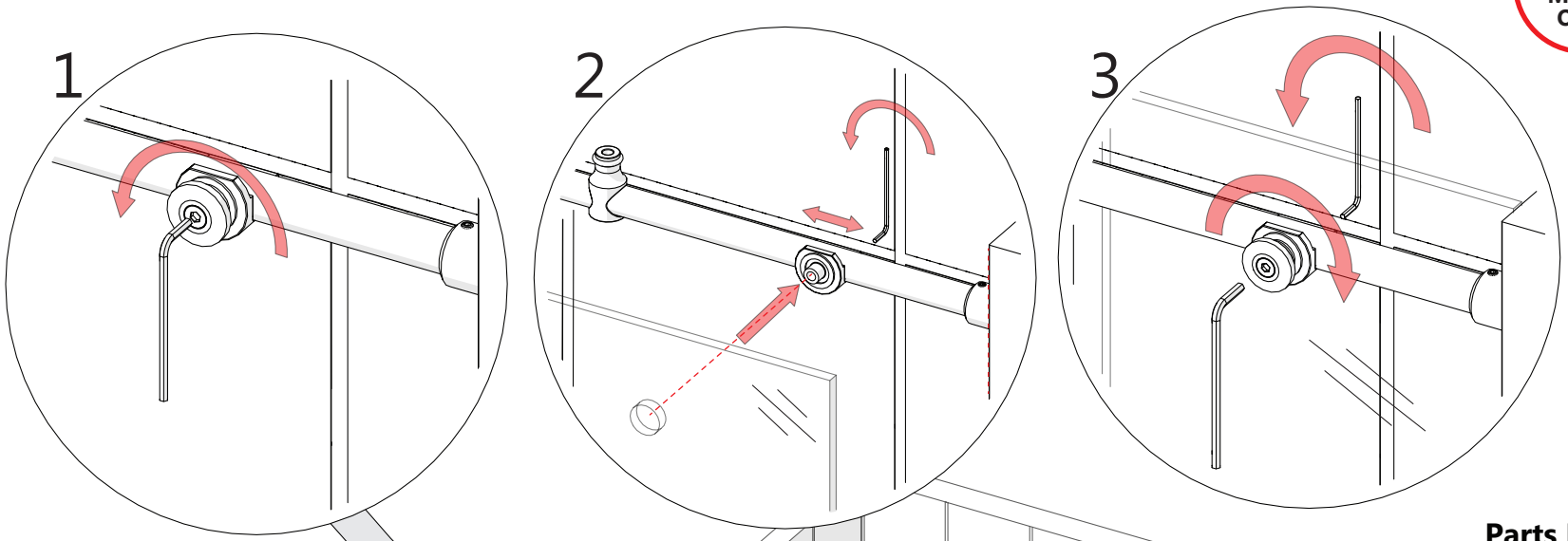


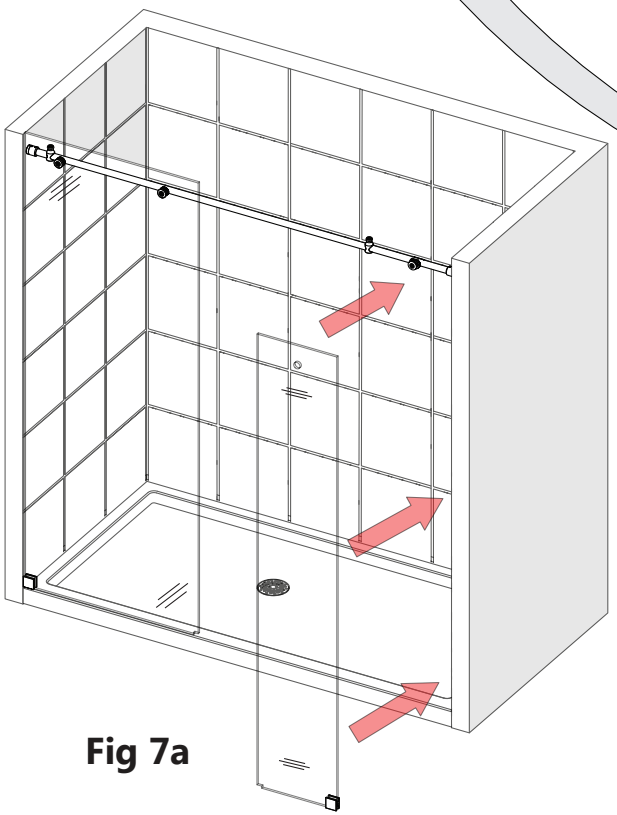

Fig 7a

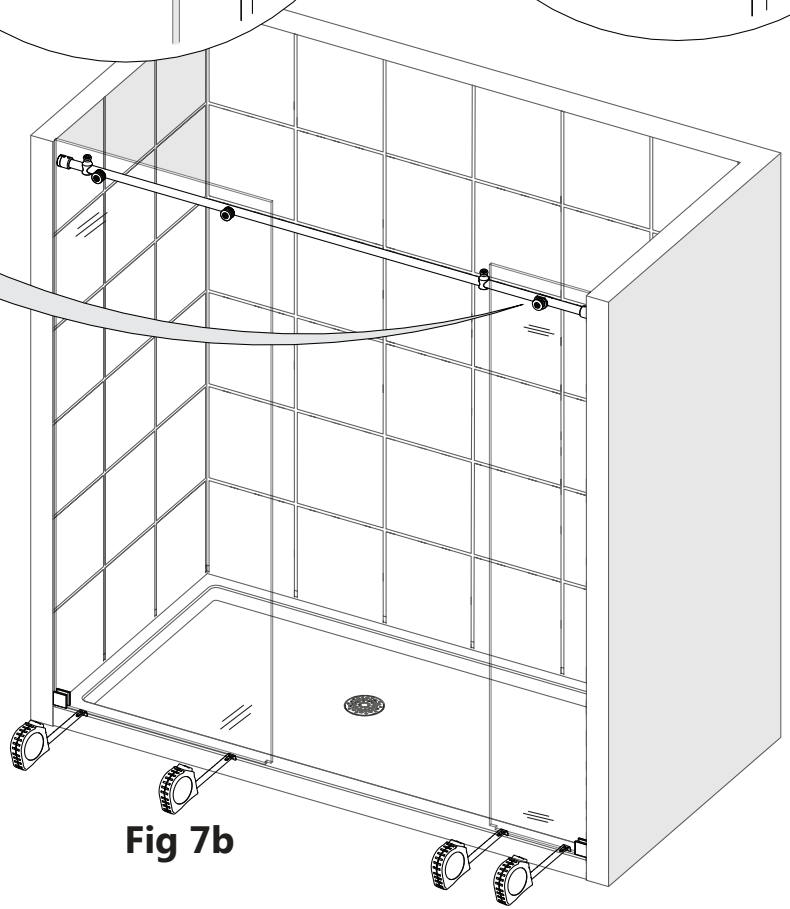

Fig 7b

## Parts Needed

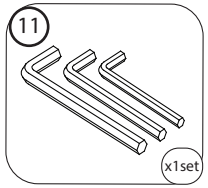


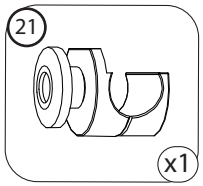


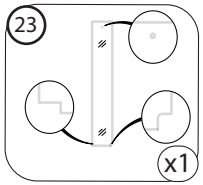


## Tools Needed

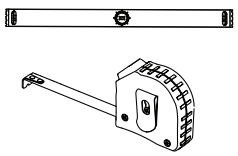



©2024 All Rights Reserved

## 8

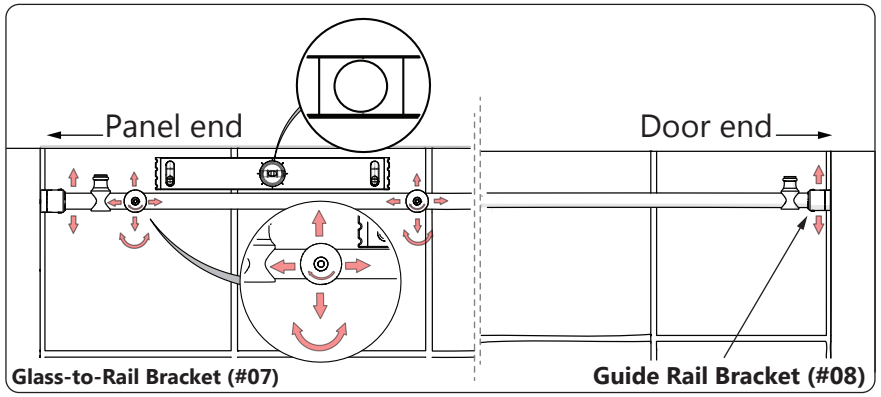


**Fig 8a** *Right-hand door installation shown.

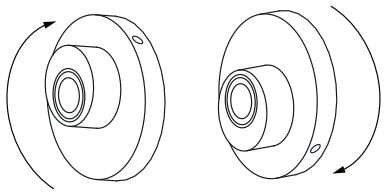


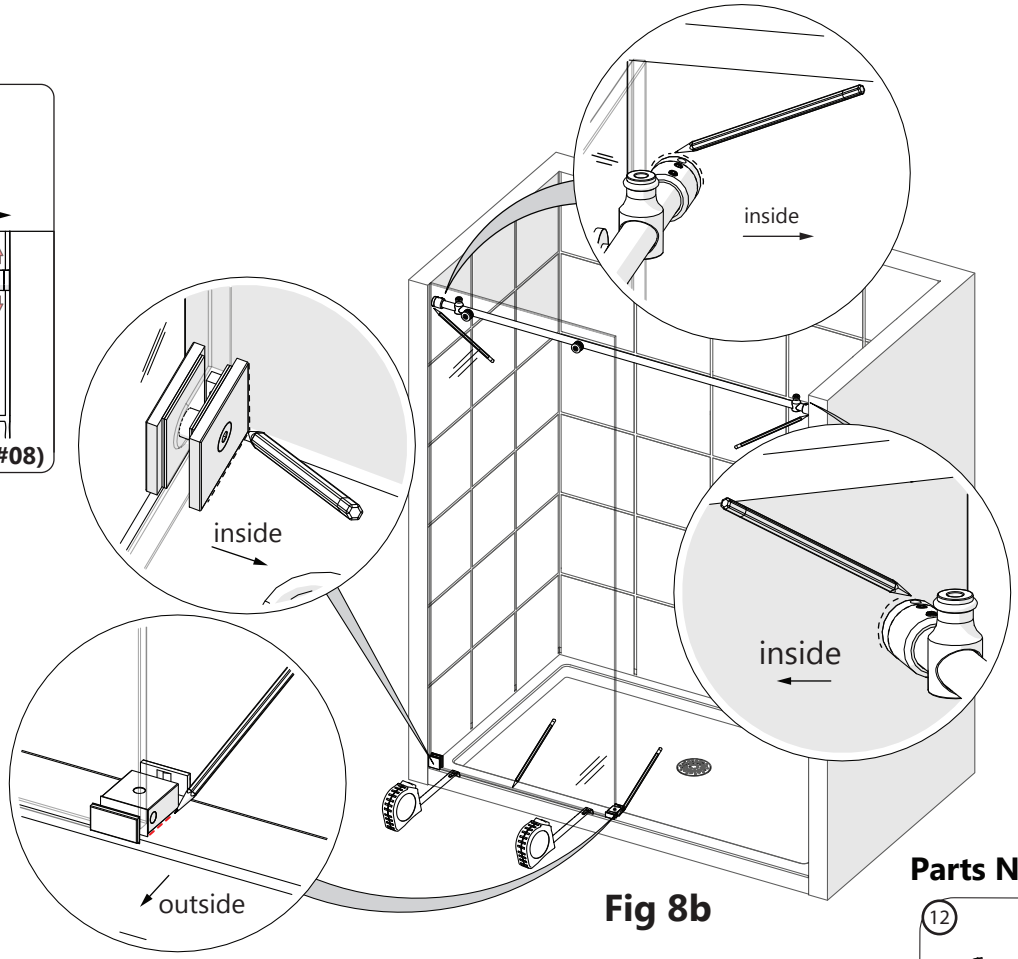


**Fig 8b**

## 9

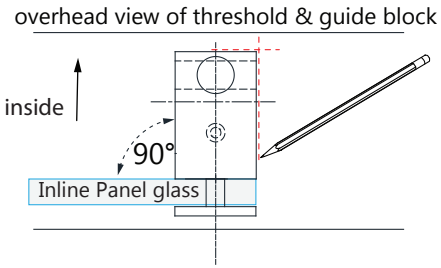


**Guide Block (#12) must be installed square to the plane of the glass.**

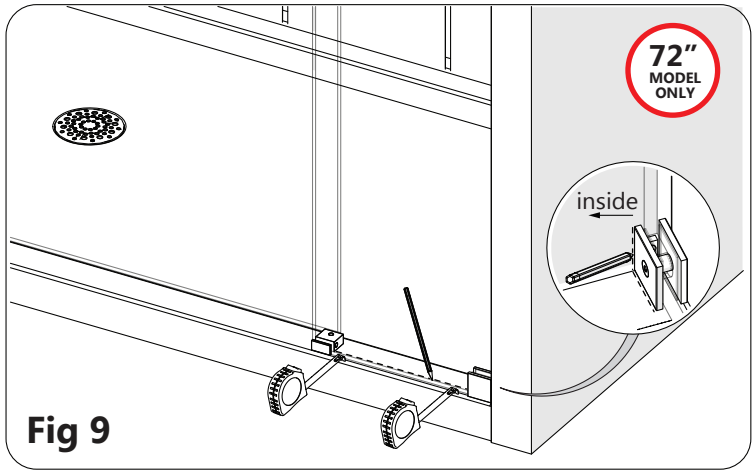


**Fig 9**

### Parts Needed

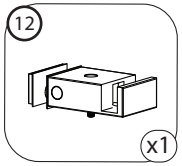


### *72" Model Only

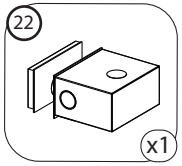


### Tools Needed

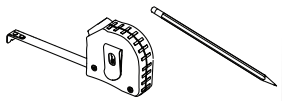



©2024 All Rights Reserved

**10**

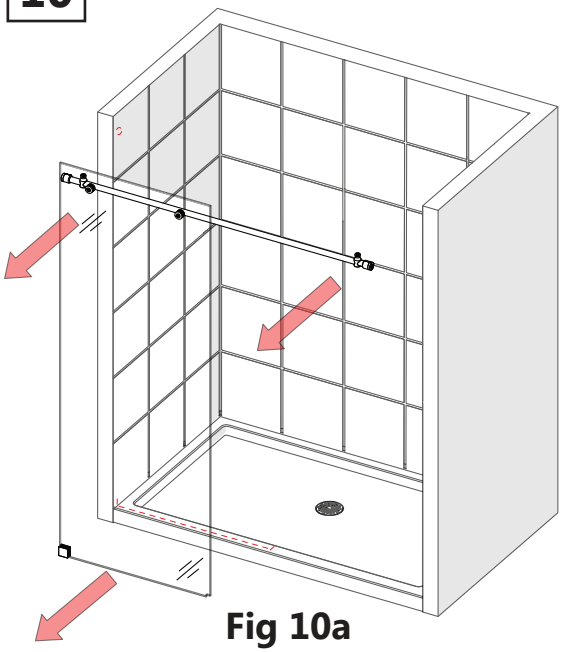

Fig 10a

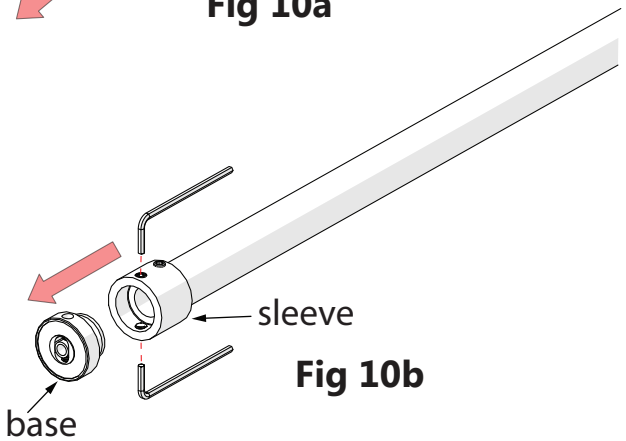


Fig 10b

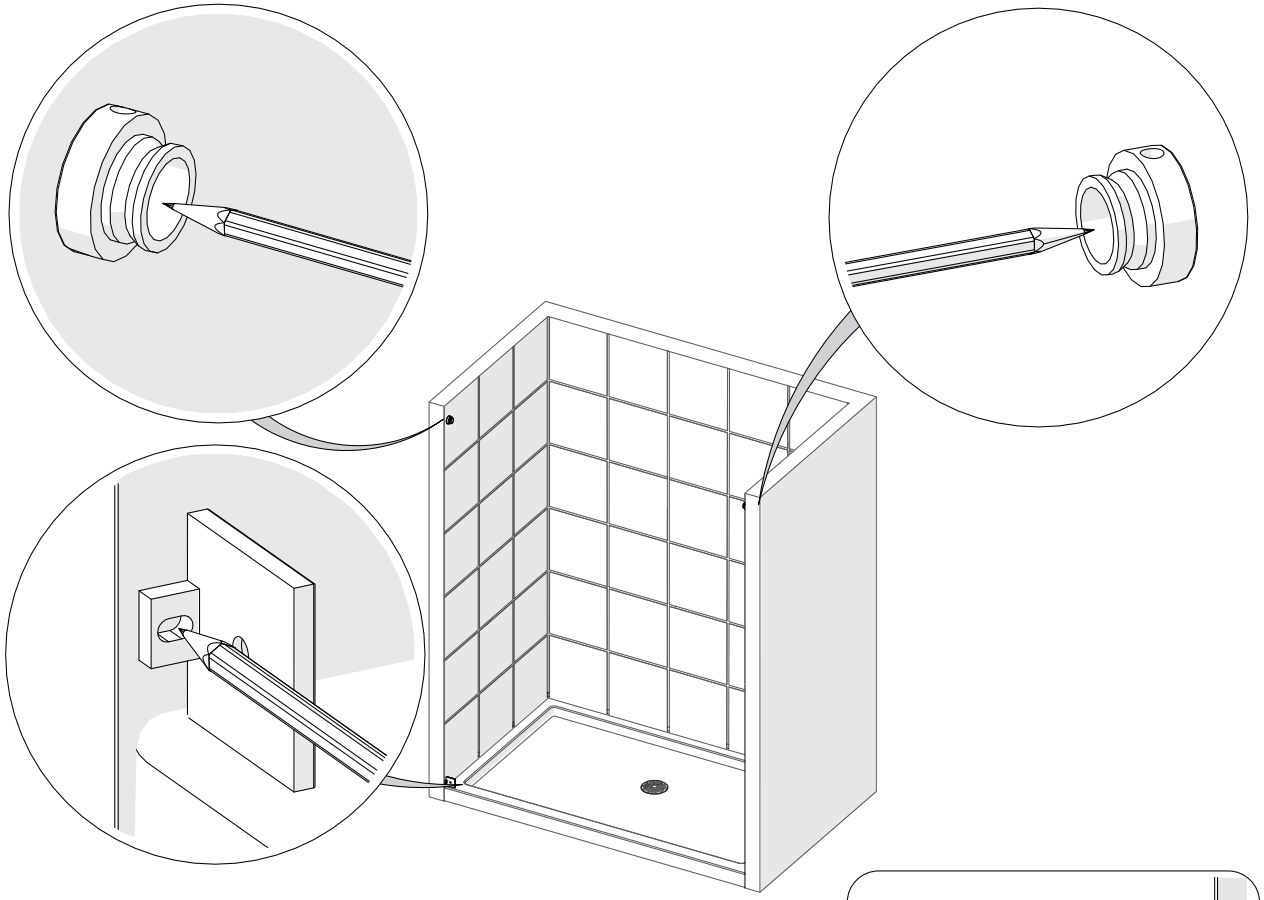

Fig 10c

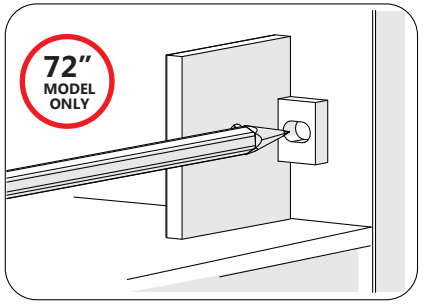


**NOTE**

Separate the **Guide Rail Bracket (#08)** base from the sleeve by loosening the set screws. Leave the sleeves on both ends of the Top Guide Rail. **<u>For enclosure installation only:</u>** remove the Guide Rail Bracket (#08) base on the side that will meet the Return Panel and refer to the **Enclosure Return Panel Manual**.

****<u>Step #11</u>** has an option for installing the guide rail brackets to the wall using anchors. However, **the manufacturer strongly recommends installing the guide rail brackets into studs or to pre-installed 2"x 6" wood reinforcements behind the wall in the area where the guide rail brackets will be attached to the wall.**

**Tools Needed**

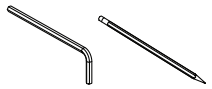



©2024 All Rights Reserved

**11**

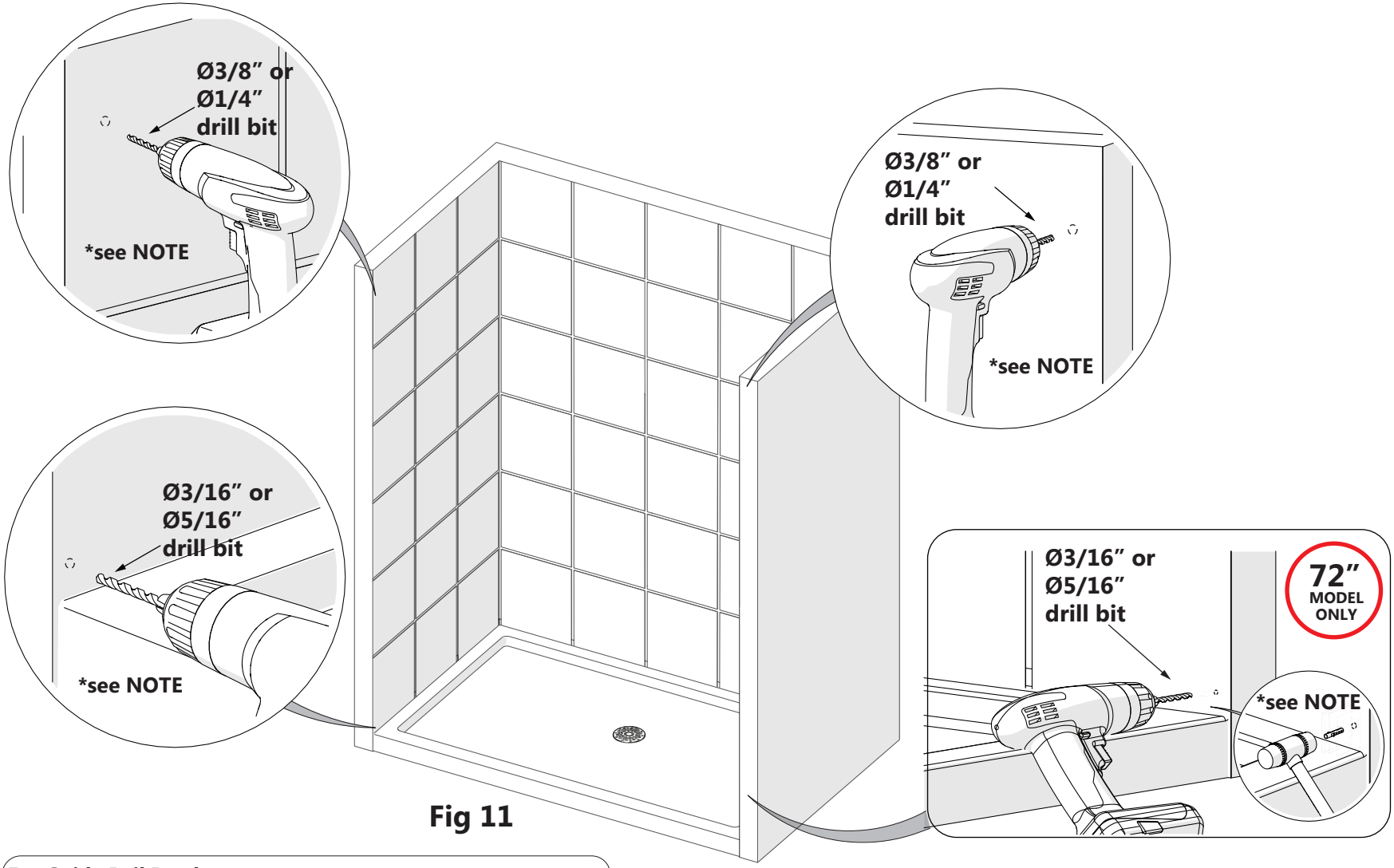


**Fig 11**

**NOTE**

**For Guide Rail Brackets:**
- **<u>If a stud is present behind the wall</u>: (recommended)**
  drill a **Ø1/4"(6mm)** hole up to the stud.

**OR**
- **<u>If no stud is present behind the wall</u>**:
  drill a **Ø3/8"(7mm)** hole and install the **Wall Anchor (#09a).**

**For Wall Brackets:**
- **<u>If a stud is present behind the wall</u>**:
  drill a **Ø3/16"(4mm)** hole up to the stud.

**OR**
- **<u>If no stud is present behind the wall</u>**:
  drill a **Ø5/16"(10mm)** hole and install the **Wall Anchor (#09b).**

## Parts Needed

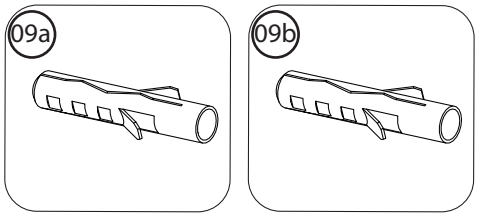


## Tools Needed

©2024 All Rights Reserved

**12**

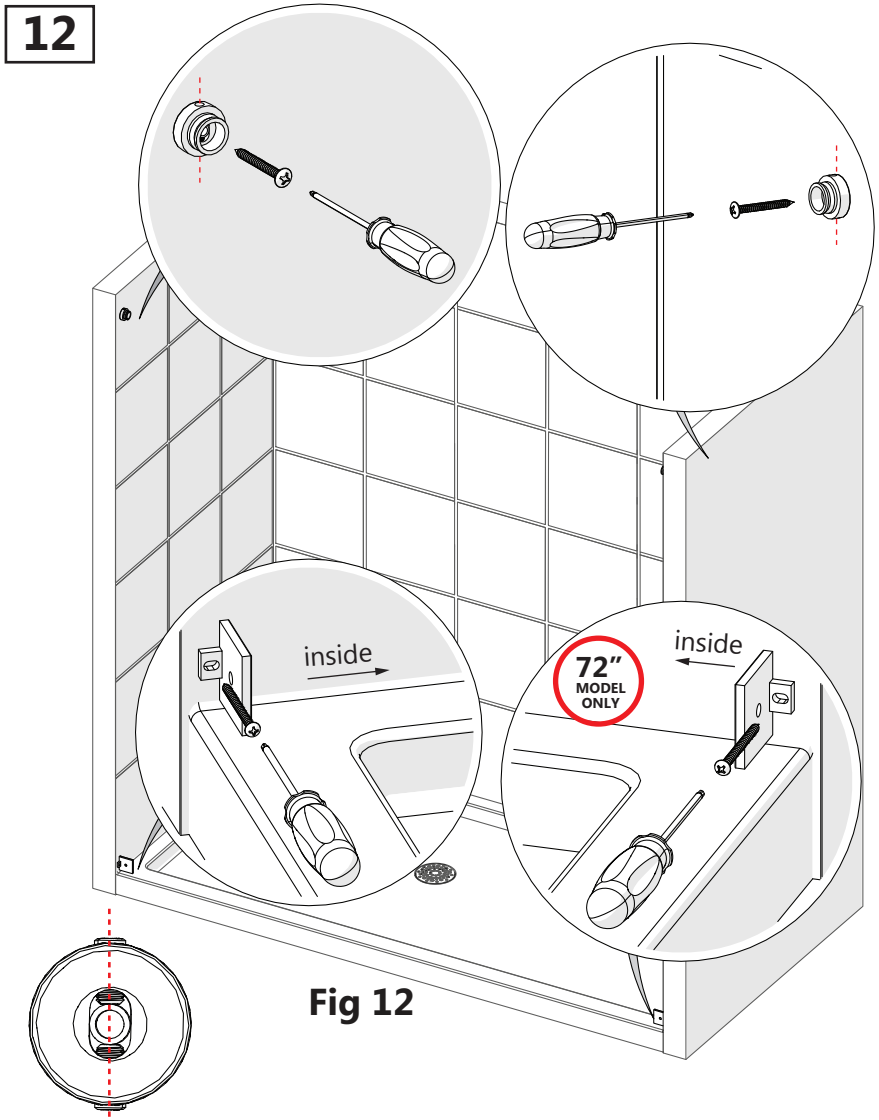


Fig 12

**NOTE** **The adjustment set screws within the Guide Rail Bracket (#08) must be aligned vertically for easier access to adjust for level if necessary after the glass is installed. Align the set screws vertically and tighten.**

**DO NOT** attach the handle to the Door Glass until instructed.
**DO NOT** attempt to lift the Door Glass with the handle as this may result in damage to the glass and/or serious personal injury. Use a professional grade glass suction cup and an assistant.

**NOTE** Leave the corner protectors on the glass until it is necessary to remove them

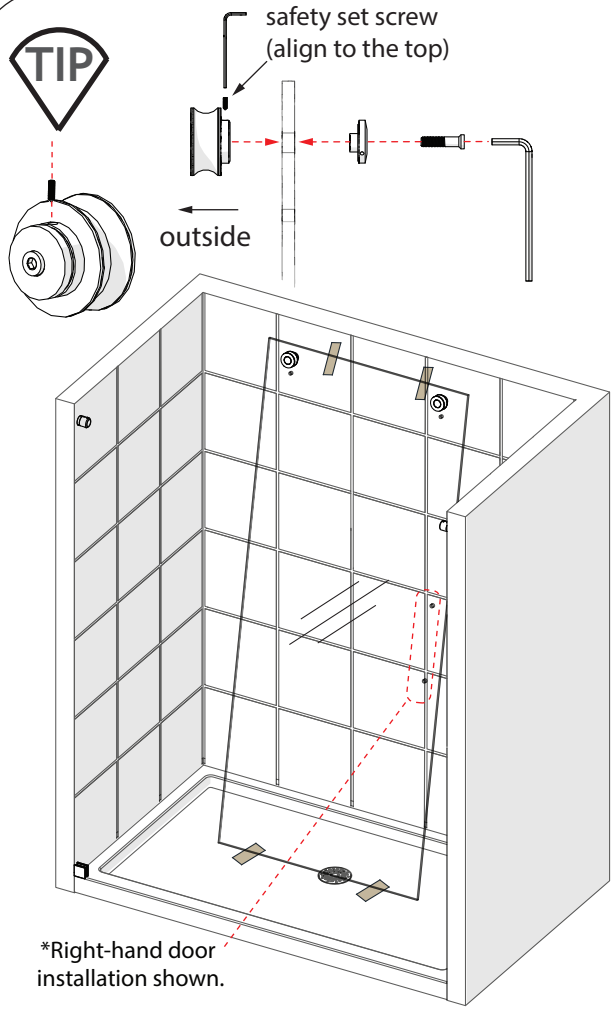


Before installing the **Panel Glass (#02)**, attach the two **Roller Assemblies (#04)** to the **Door Glass (#05)** with the wheels facing outside of the shower. Align the **safety set screw** towards the top for easier access. Then, take the **Door Glass (#05)** into the shower area and lean it against the wall with the handle holes on the correct side. Always use padding to protect the glass and shower surfaces.

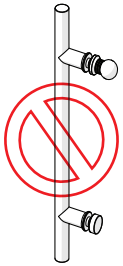

## Parts Needed

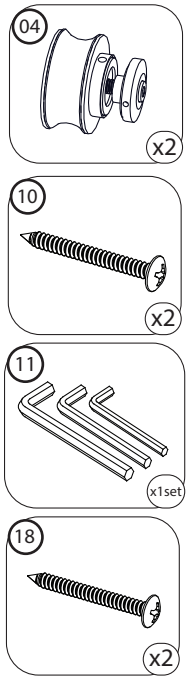


## Tools Needed

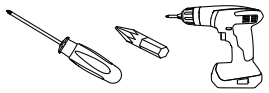



©2024 All Rights Reserved

**13a**

# Guide Block Installation

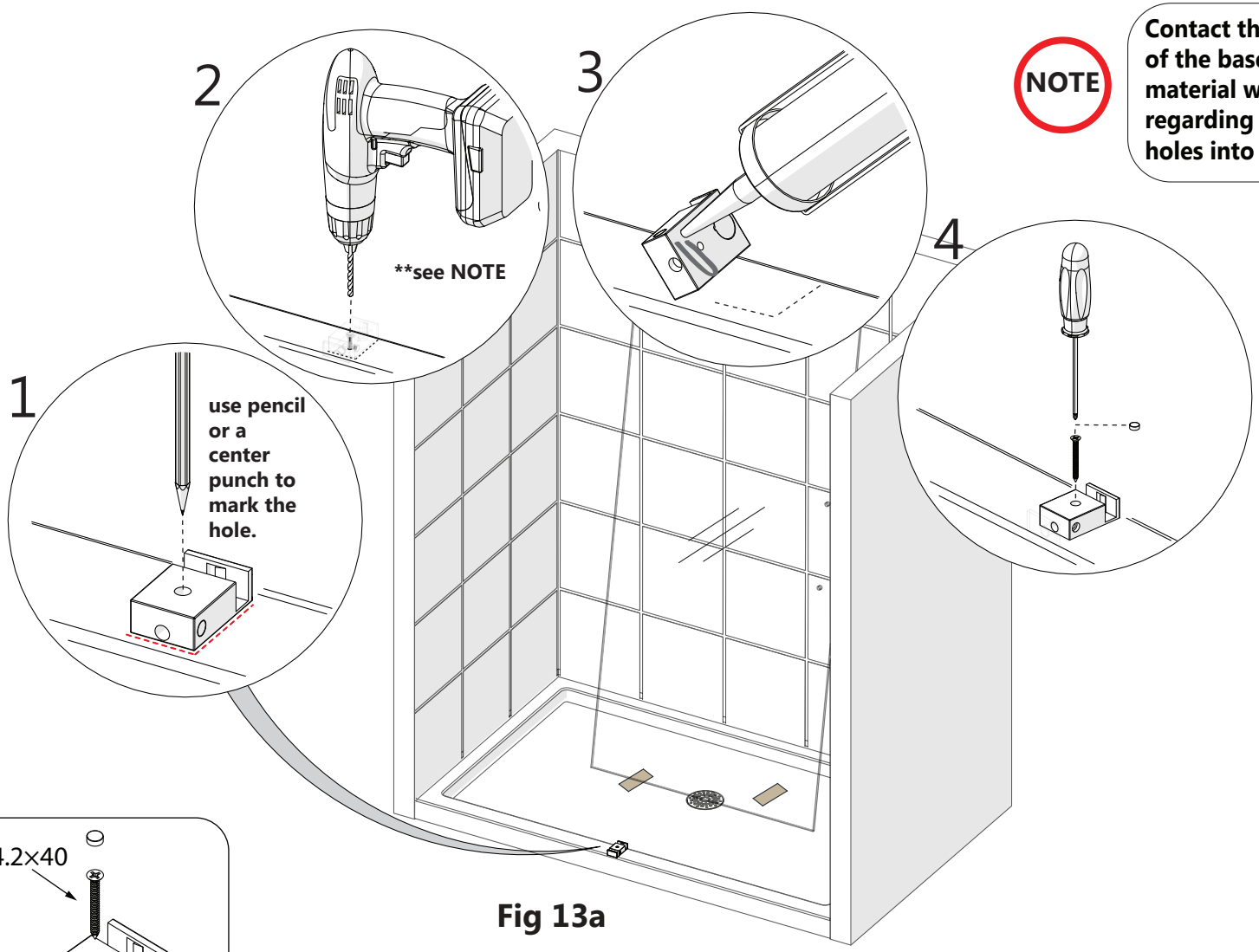


Fig 13a

**NOTE**

**Contact the manufacturer of the base, tub or threshold material with any questions regarding the drilling of holes into their product.**

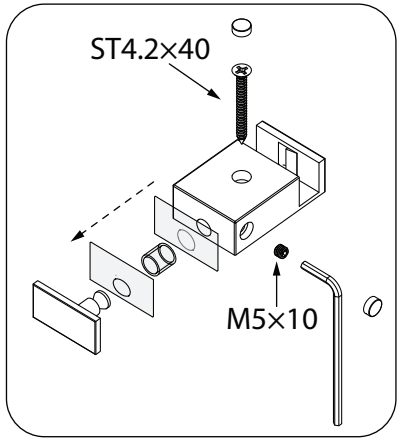


**Part #12 - Guide Block (with caps)**

**NOTE**

- For installation into an **Acrylic Threshold**:
  drill a **Ø1/8"(3mm)** hole and use the **ST4.2 x 40mm Countersunk Screw (#17).**

**OR**

- For installation into a **Tile Threshold**:
  drill a **Ø3/16"(4mm)** hole up to the stud
  and use the **ST4.2 x 40mm Countersunk Screw (#17).**

## Parts Needed

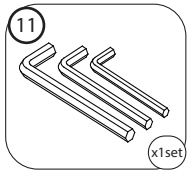


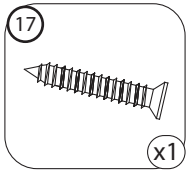


## Tools Needed

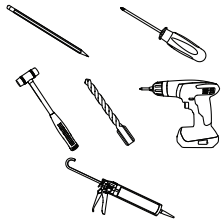



©2024 All Rights Reserved

**13b**

# Additional Guide Block Installation (72" Model Only)

**72" MODEL ONLY**

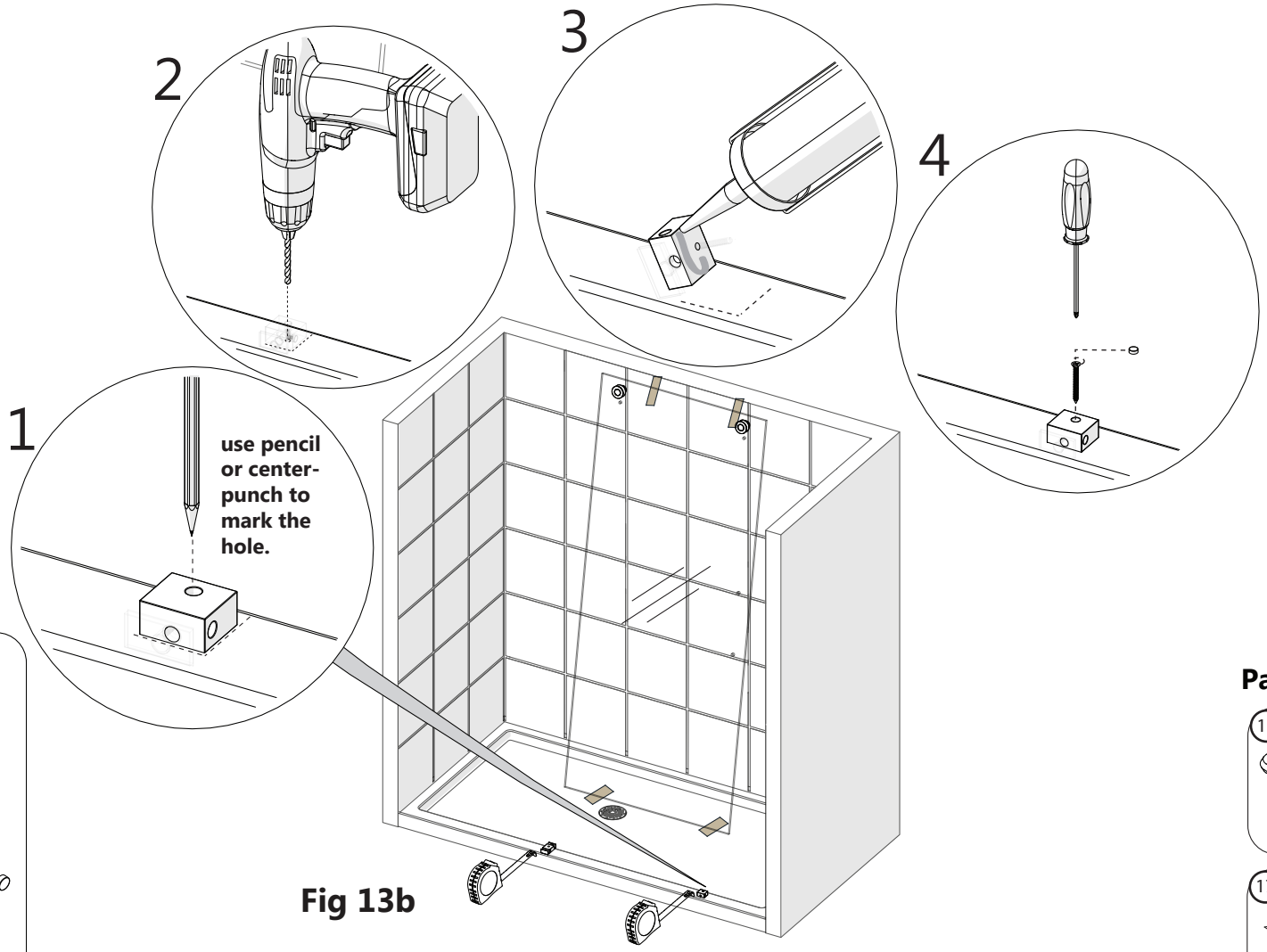


Fig 13b

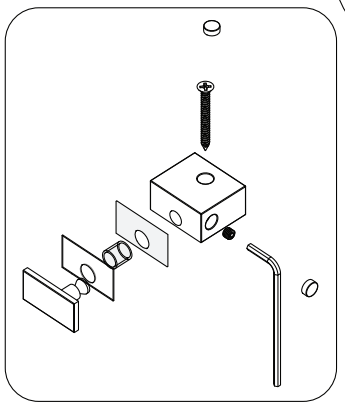

**Part #22 - Small Inline Panel Glass Bottom Bracket**

**NOTE**

- For installation into an **Acrylic Threshold**: drill a **Ø1/8"(3mm)** hole and use the **ST4.2 x 40mm Countersunk Screw (#17).**

**OR**

- For installation into a **Tile Threshold**: drill a **Ø3/16"(4mm)** hole up to the stud and use the **ST4.2 x 40mm Countersunk Screw (#17).**

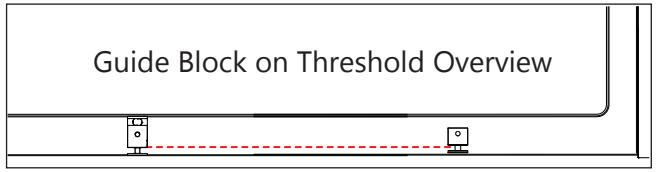


**NOTE**

**Contact the manufacturer of the base, tub or threshold material with any questions regarding the drilling of holes into their product.**

## Parts Needed

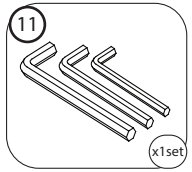


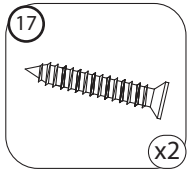


## Tools Needed

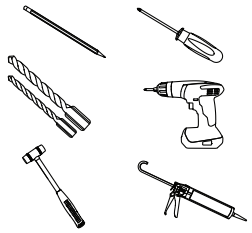



©2024 All Rights Reserved

14

# Guide Rail Bracket Adjustment

TIP

Adjust the installed **Top Guide Rail (#03)** to level as necessary using the **Guide Rail Brackets (#08)** first and then the **Glass-to-Rail Brackets (#07)**. **Start adjustments from the door end.**

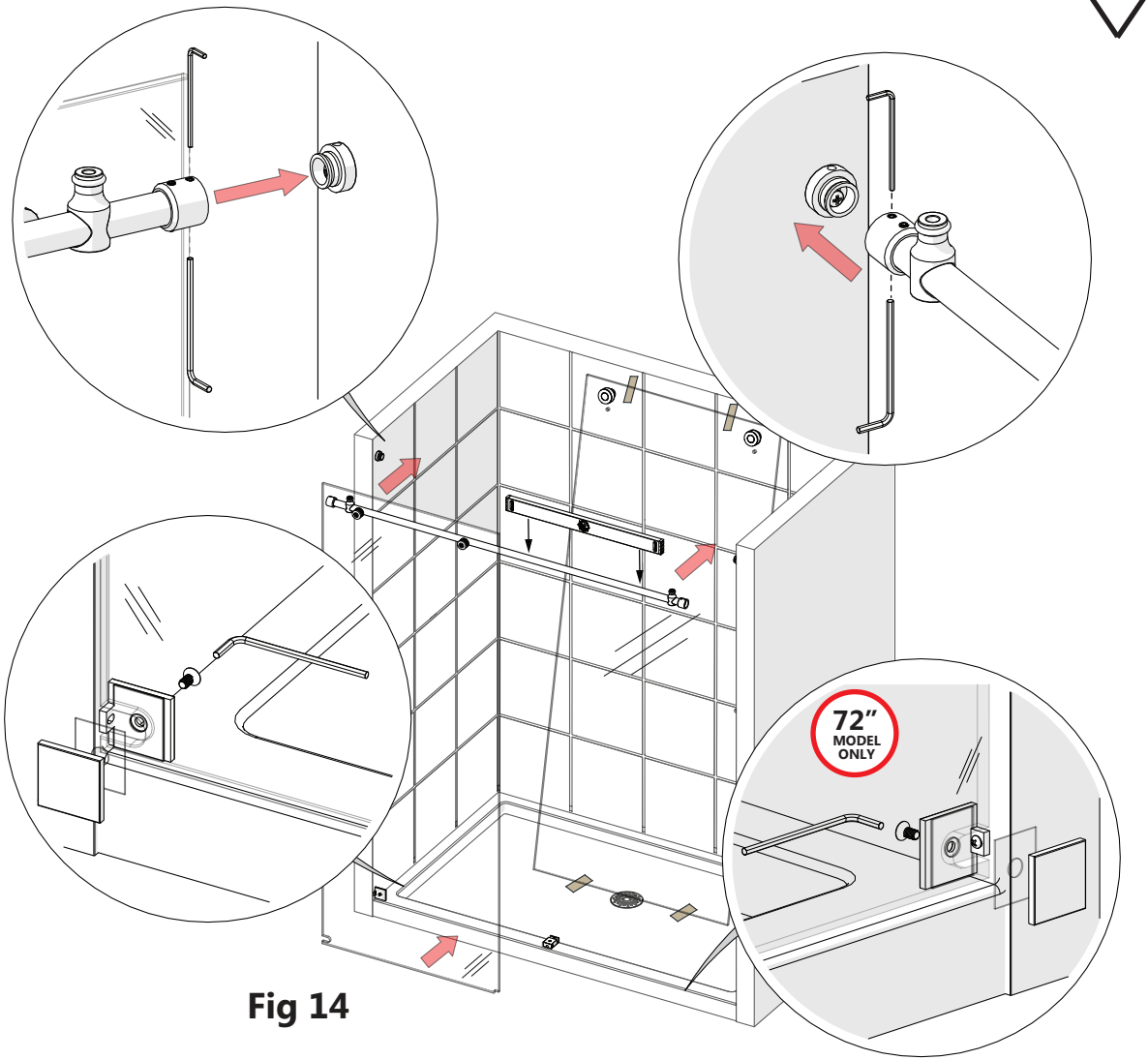


Fig 14

**To lower the rail:**
Loosen the top set screw and tighten the bottom set screw.

**To raise the rail:**
Loosen the bottom set screw and tighten the top set screw.

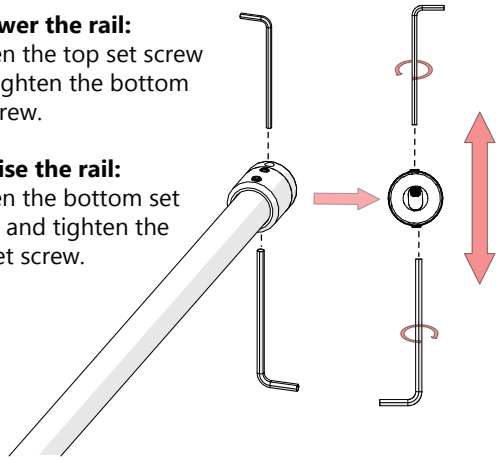

NOTE

Use the **Guide Rail Bracket (#08)** set screws to adjust the **Guide Rail (#03)** to level.

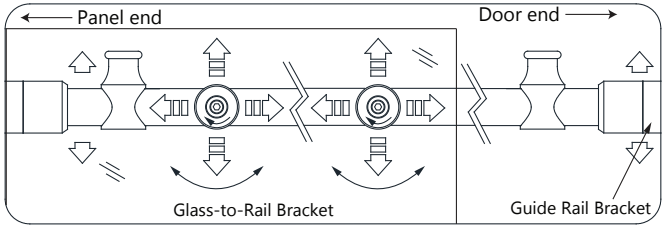


*Right-hand door installation shown

NOTE

**<u>For the 72" Model:</u>** Repeat this step for the **Wall Bracket (#19)** for the **Small Inline Panel Glass (#23) (Fig 14.4)**. Use the clear vinyl gasket between the glass and the metal parts to avoid contact with the glass, then tighten the bolt using the supplied **Allen Wrench (#11)**.
**<u>For Enclosure Model:</u>** Refer to **Step 8** in the **Enclosure Return Panel Manual** to connect the shower assembly to the Return Panel using the Glass-to-Guide Rail Connector (#28).

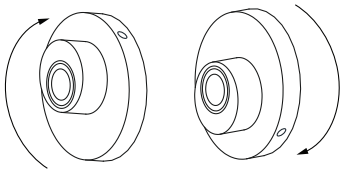


Glass-to-Rail Bracket Adjustments

## Parts Needed

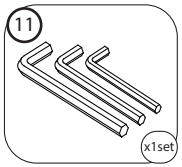




©2024 All Rights Reserved

**15**

## (72" Model Only)

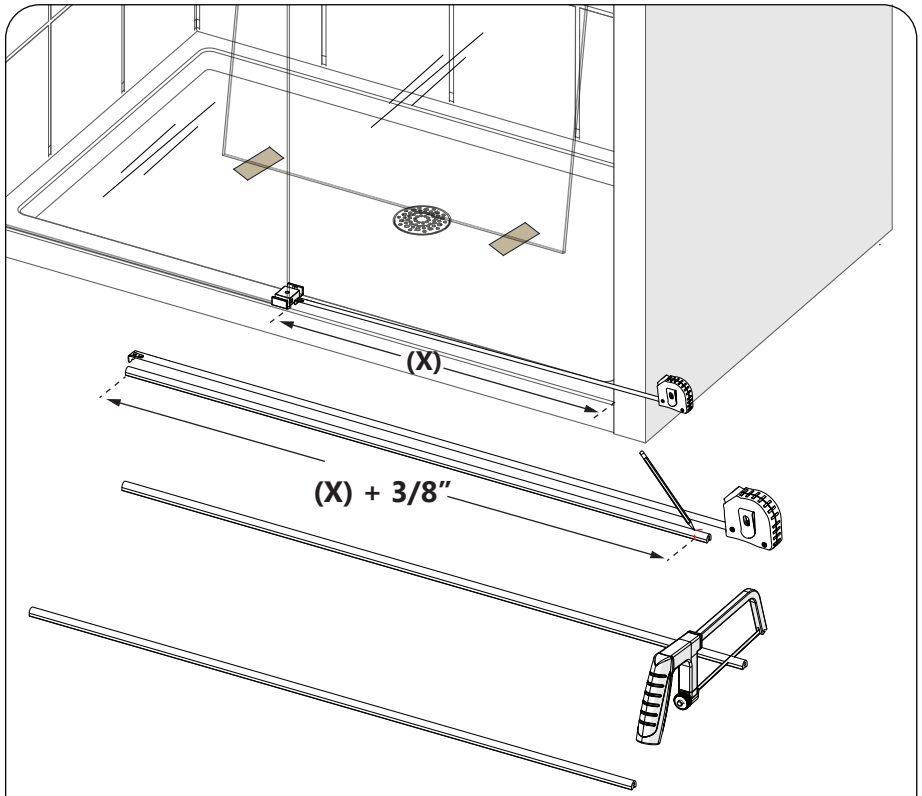


Measure the distance '**X**' from the **Guide Block (#12)** to the wall and add 3/8".

**Fig 15a**

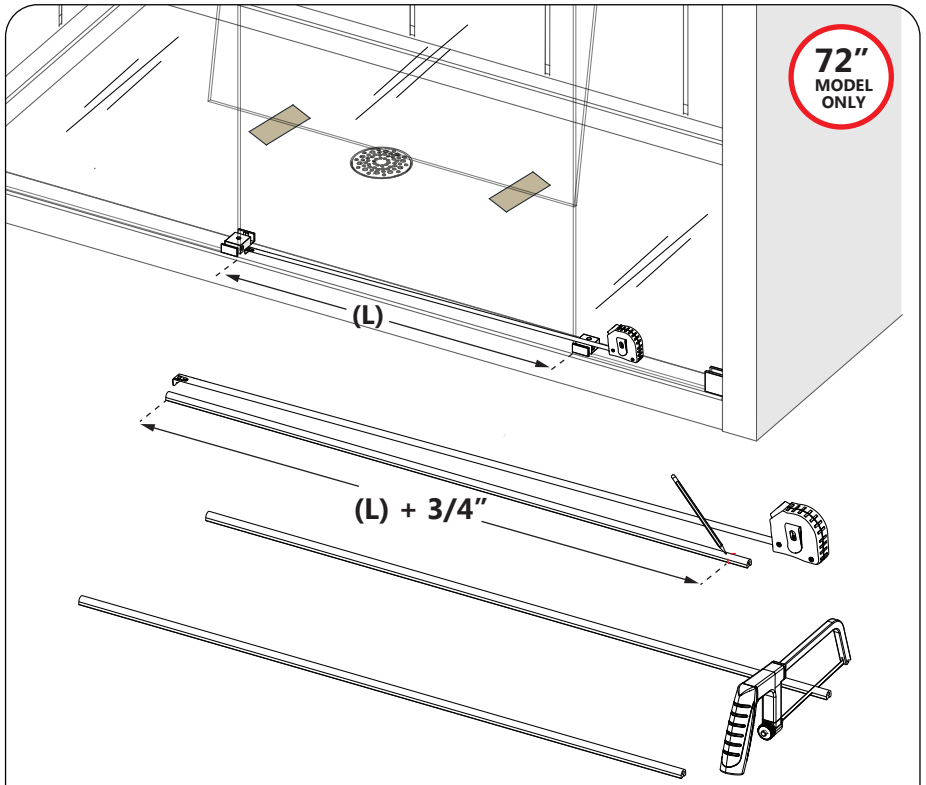


Measure the distance '**L**' between the guide blocks and add 3/4".

**Fig 15b**

**Parts Needed**

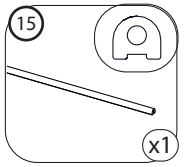


**Tools Needed**

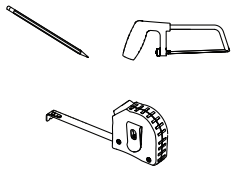

NOTE

**<u>48" or 60" Model Size:</u>** Cut the **Dam Strip (#15)** to the size of: **(X) + 3/8".**

**<u>72" Model Size:</u>** Cut the **Dam Strip (#15)** to the size of: **(L) + 3/4".**



©2024 All Rights Reserved

**16**

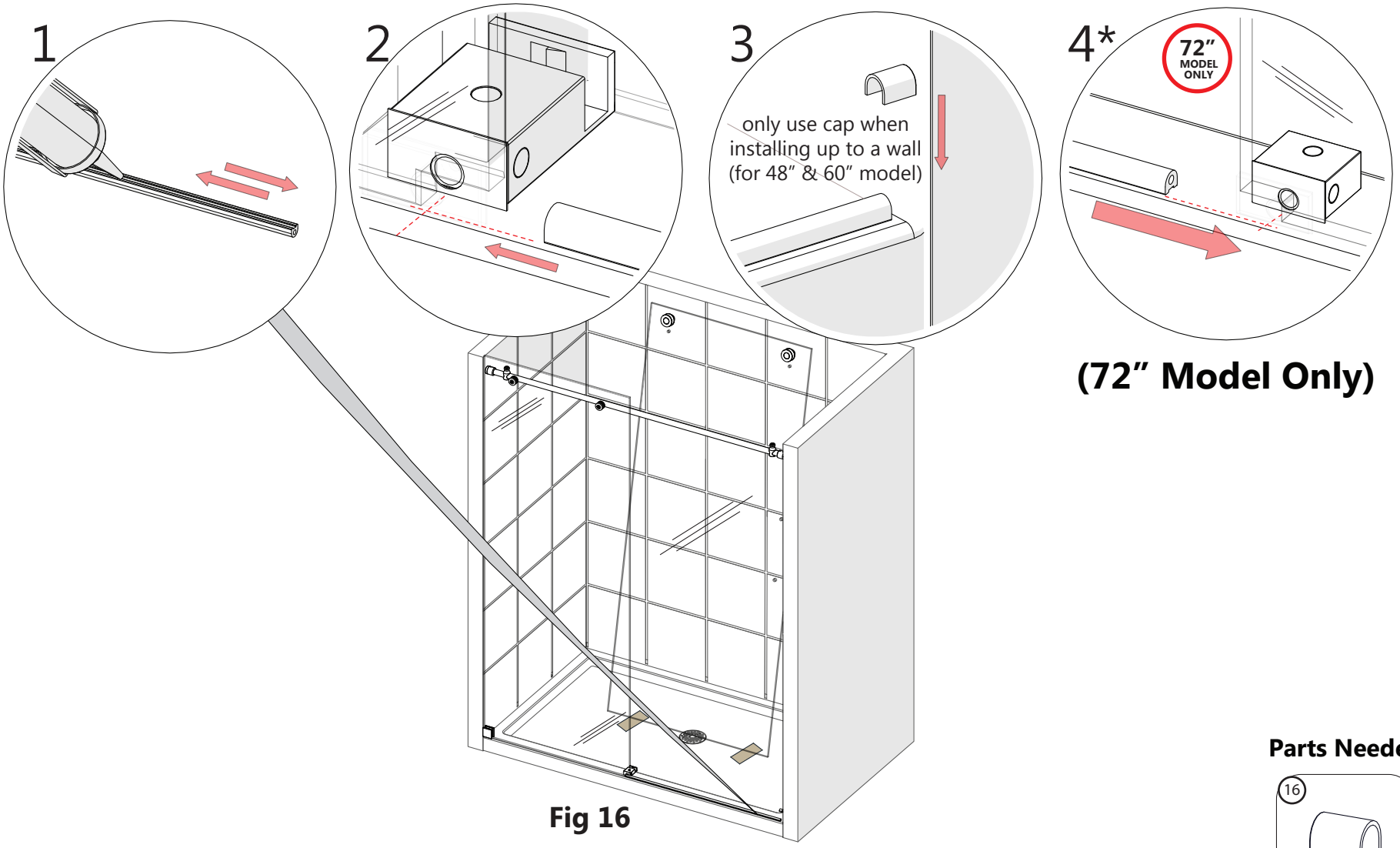


**(72" Model Only)**

**Fig 16**

**Parts Needed**

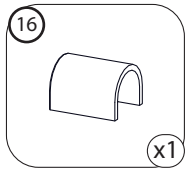


**Tools Needed**

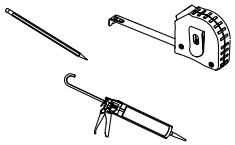

**NOTE**

**<u>For the 72" Model:</u>** Insert the **Dam Strip (#15) into** the **Small Inline Panel Glass Bottom Bracket (#22). (Fig 16.4*)**



©2024 All Rights Reserved

**17**

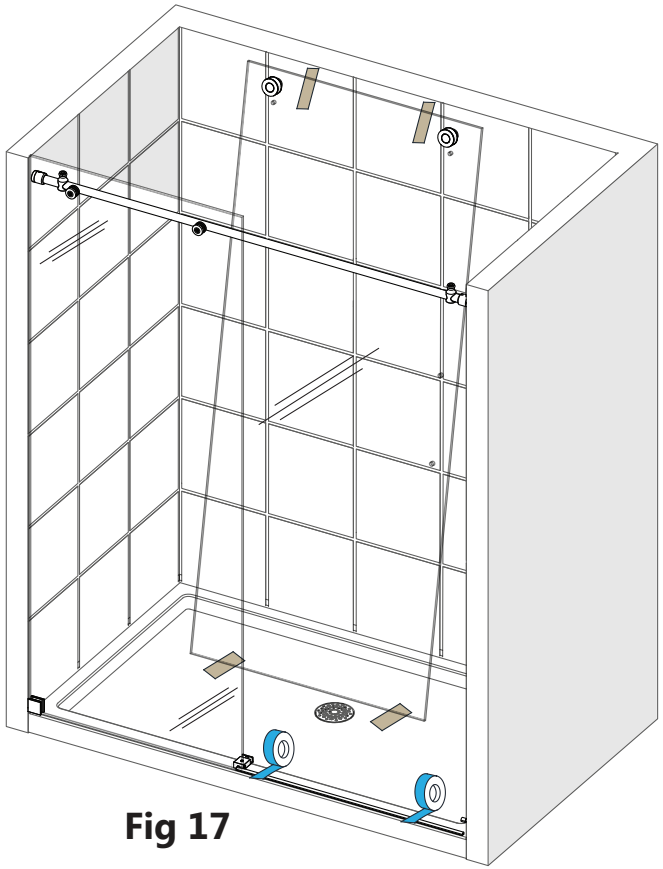

Fig 17

**18**

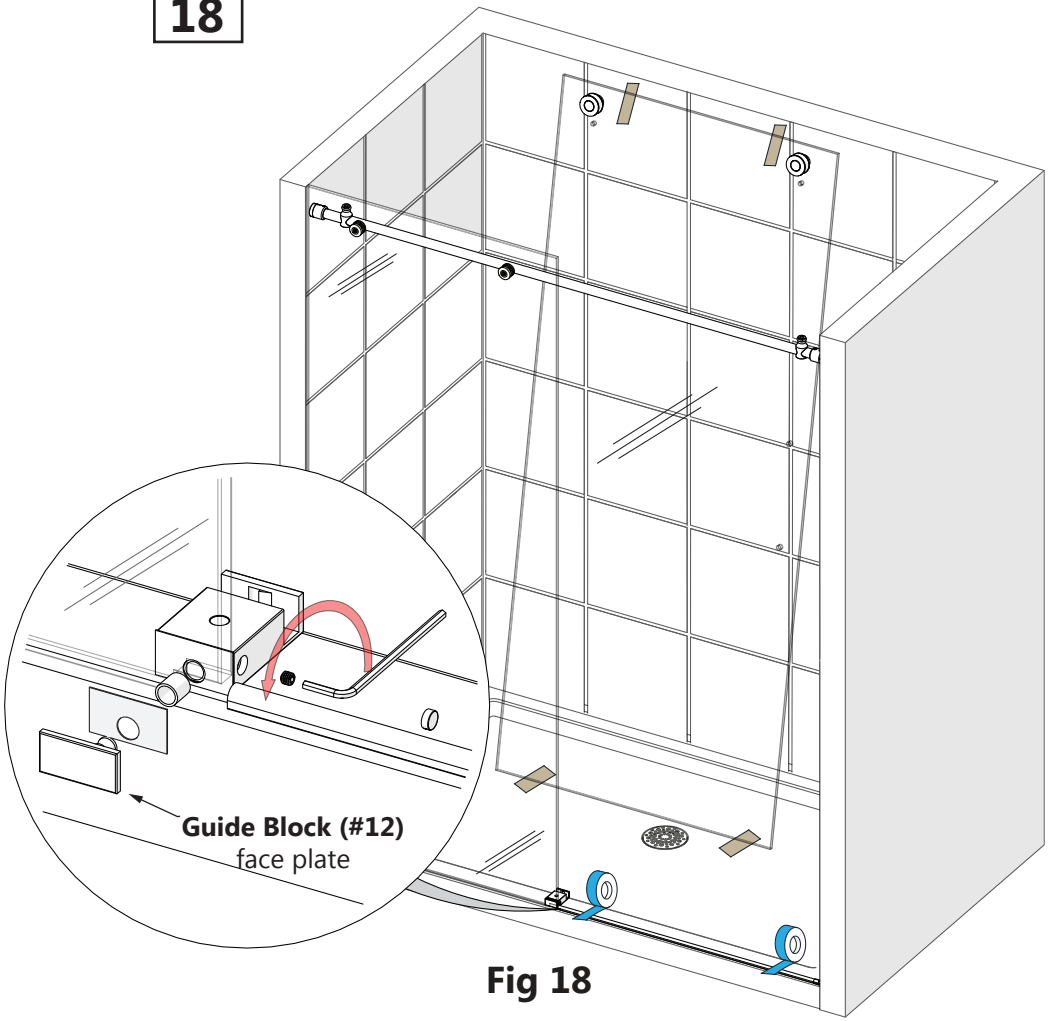


Fig 18

**Parts Needed**

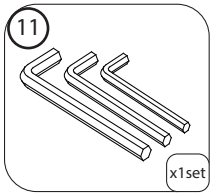


**Tools Needed**

TIP

Secure the **Dam Strip (#15)** to the threshold with several pieces of painter's tape until the silicone fully cures.

NOTE

Attach the **Guide Block face plate** to the installed **Guide Block (#12)**.



©2024 All Rights Reserved

**19**

# (72" Model Only)

**72" MODEL ONLY**

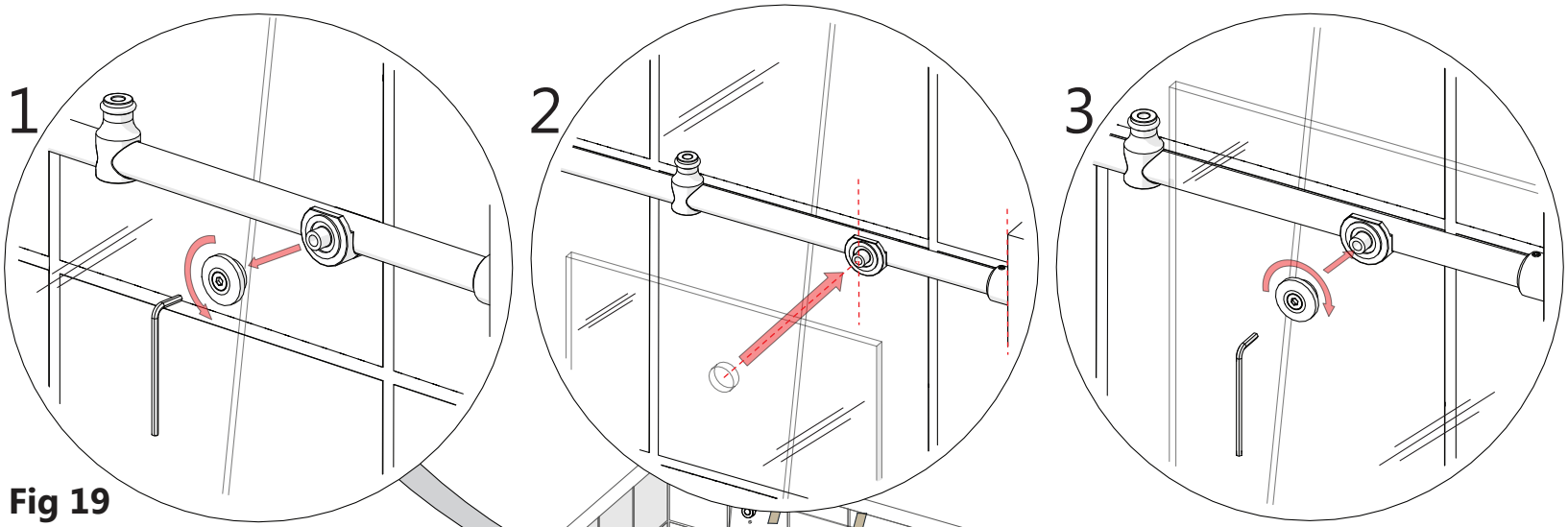


Fig 19

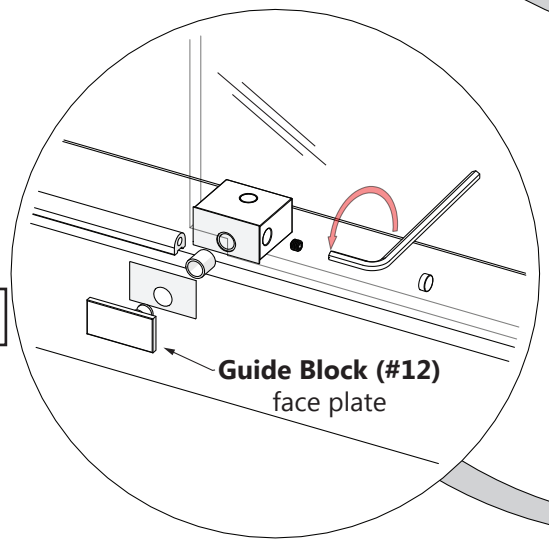


**20**

Fig 20

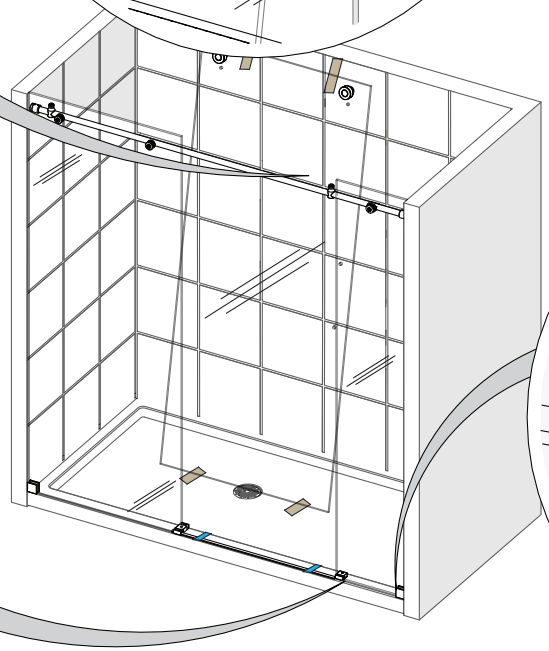

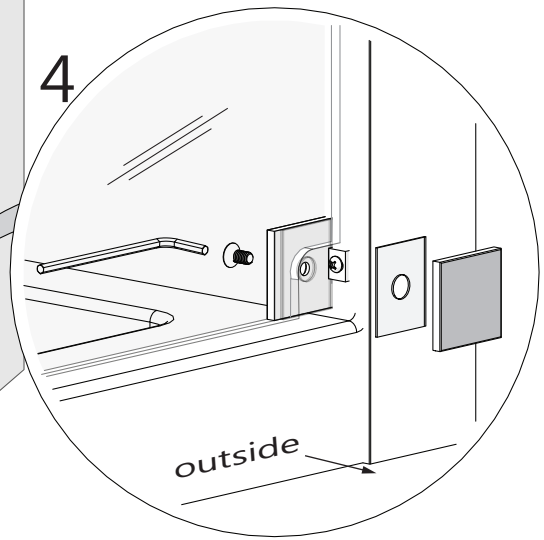


## Parts Needed

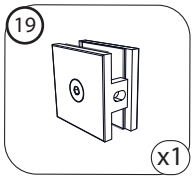


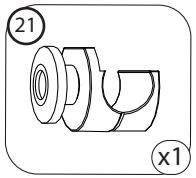


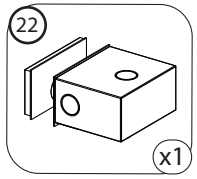


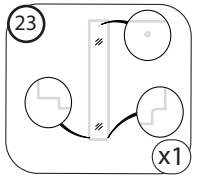


## Tools Needed

**NOTE**

Secure the **Dam Strip (#15)** to the threshold with several pieces of painter's tape until the silicone fully cures.



©2024 All Rights Reserved

**21**

# Roller Assembly Installation

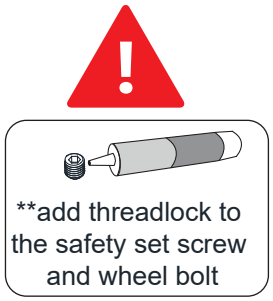


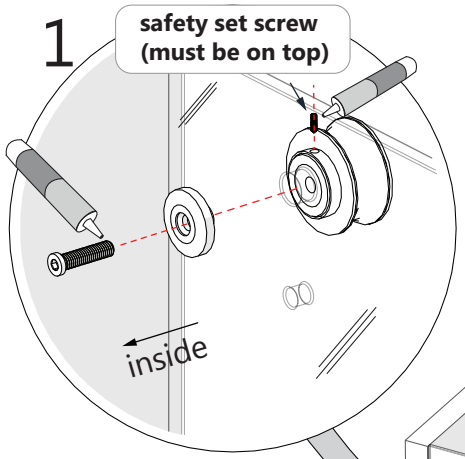


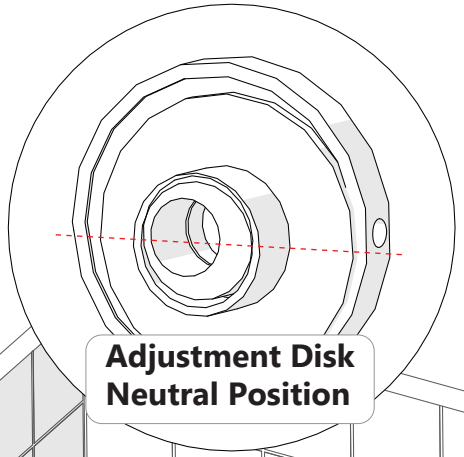


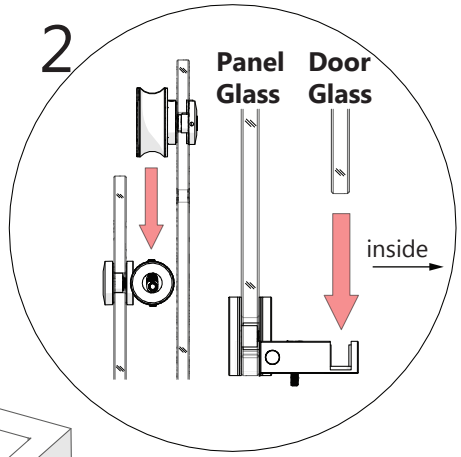


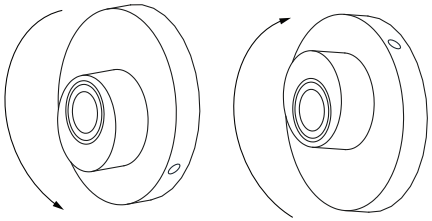


Roller Assembly Wheel Adjustment

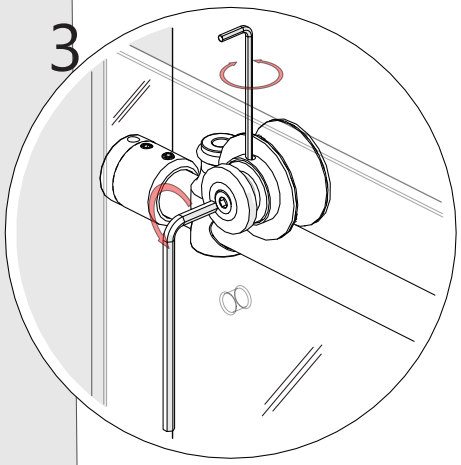


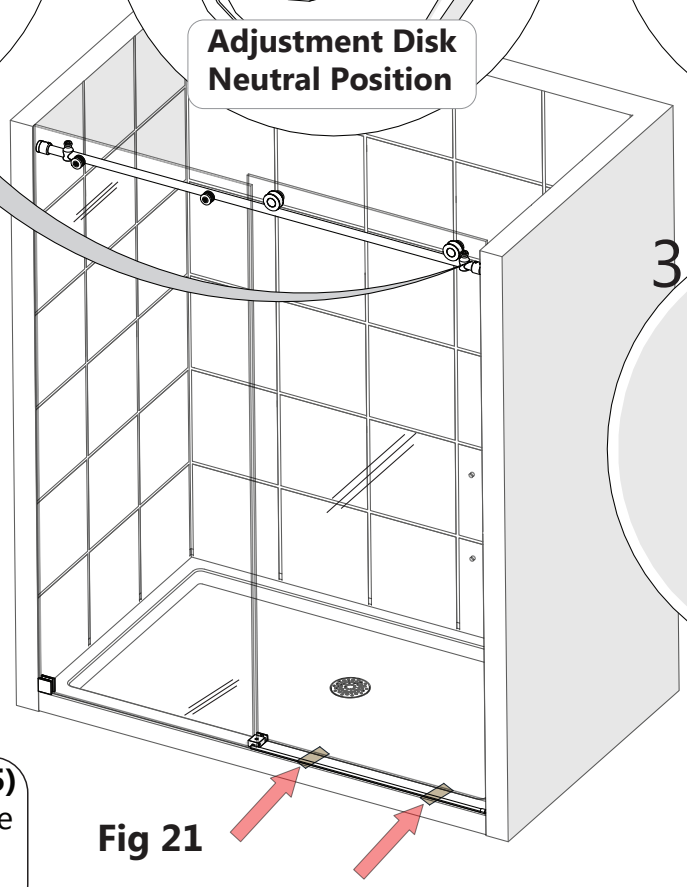

**Fig 21**

**TIP** Mark the location of the high spot on the outer surface of the adjustment disk with a felt tip pen to make adjustment easier to see.

**TIP** Use a 3/16" shim beneath the **Door Glass (#05)** when adjusting the level of the door so that the glass does not make contact with the guide block or threshold.

**NOTE** The adjustment disks in the wheels are the same as the disks in the Glass-to-Rail Brackets and can be rotated to adjust the **Door Glass (#05)** to create a seal with the wall. The **Safety Set Screw on both Roller Assembly Wheels MUST be re-tightened after installation** to prevent the wheel bolt from becoming loose. Apply **Thread Lock Adhesive (#26)** during installation. **See detailed description on page 34**.

**Parts Needed**

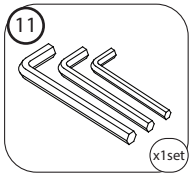


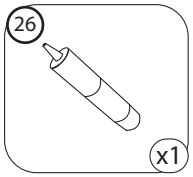




©2024 All Rights Reserved

# Roller Assembly Adjustment Procedure

©2024 All Rights Reserved

To create a good seal with the wall and to achieve minimal clearance beneath the door glass without making contact with the bottom guide block or threshold.
Have at least two 3/16" shims or wedge shims (to maintain space beneath the door glass) and an assistant available to help with this procedure.
Adjust only one wheel at a time. You may need to perform these steps more than once to get the desired results.

**NOTE: Be sure to install the Bulb Vinyl Seal onto the edge of the door glass to protect the edge from contact with the wall during installation or adjustment.**

**CAUTION:** The door glass is heavy and may require two people to safely accomplish these steps. **DO NOT** adjust the Roller Assemblies without first securing the door glass with shims, an assistant or both.

1. First, loosen and lower either the Roller Guards or Bottom Rollers to allow enough room to adjust the upper rollers.

2. Loosen the safety set screw on the roller (remove and apply a drop of thread lock if not done already)

3. Loosen the wheel bolt just enough so that you can rotate the adjustment disk. (remove and apply a drop of thread lock if not done already)

4. Rotate the adjustment disk to raise or lower the door slightly with help from an assistant. You can use a small tool (like an allen wrench) to aid in turning this disk by inserting it into the small hole on the edge of the adjustment disk.

5. While holding the adjustment disk in place, retighten the wheel bolt. Use a shim or have an assistant hold the door glass in place while you retighten the wheel bolt.

6. Once satisfied with the adjustment, **it is very important to re-tighten the safety set screw** to secure the wheel bolt in place.

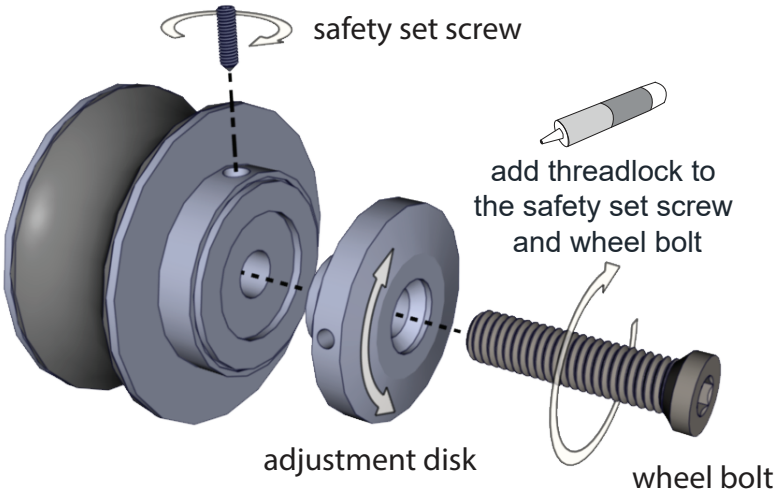


The provided Thread Lock will remain workable for approximatley 10-15 minutes before drying.

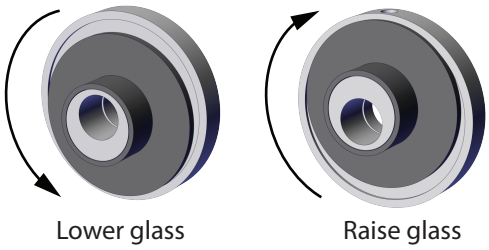


Roller wheel adjustment disks

22

# Roller Guards

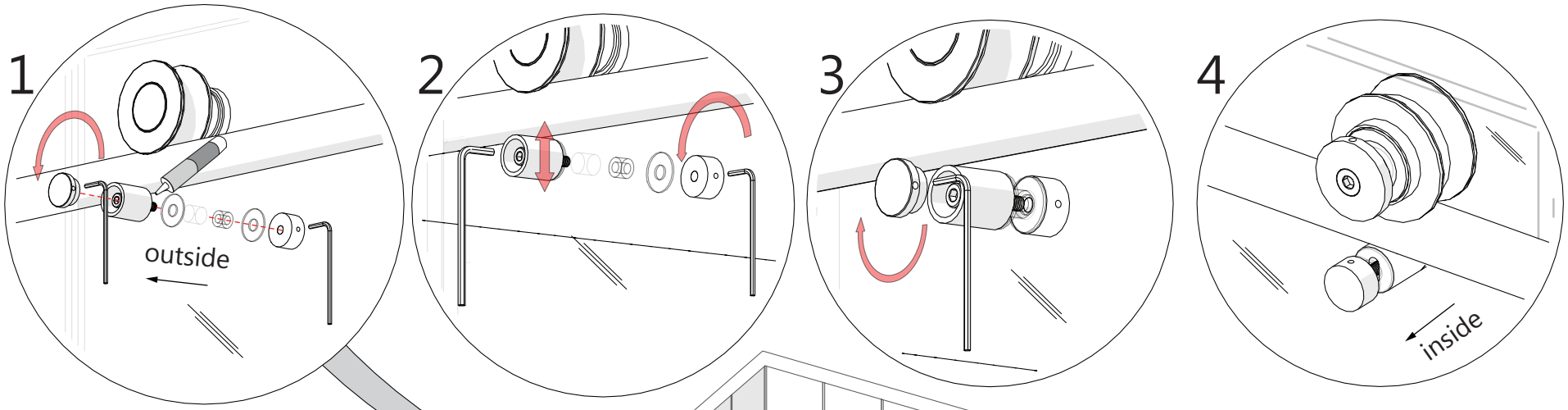


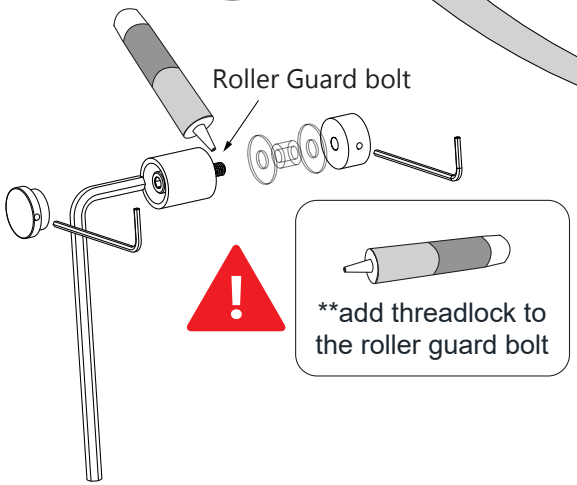


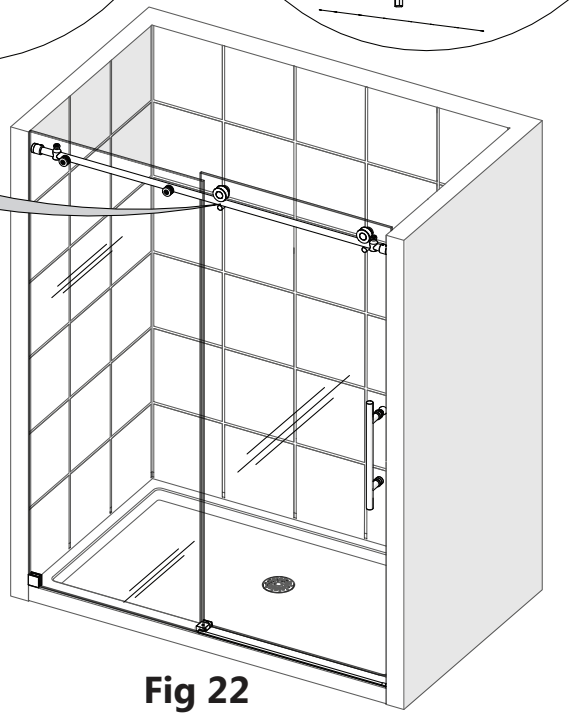

Fig 22

NOTE

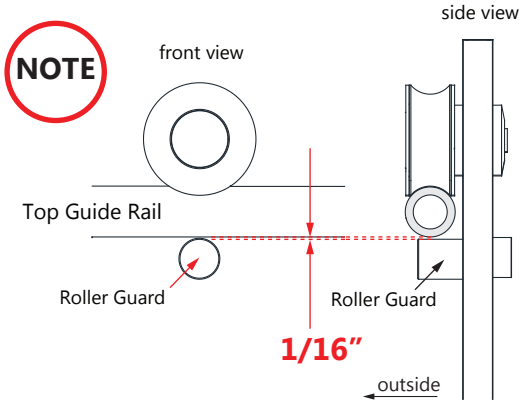


Position the **Roller Guard (#29)** 1/16" below the rail. Hold the roller guard bolt with the **Allen Wrench (#11)** and tighten the interior post using a small allen wrench **(Fig 22.2*)**

## Parts Needed

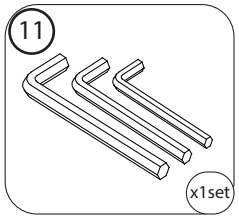


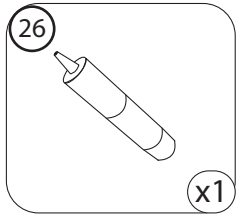


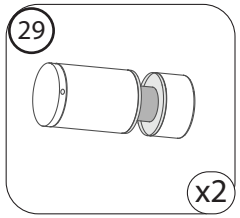




©2024 All Rights Reserved

23

# Vinyl Seals & Handle Installation

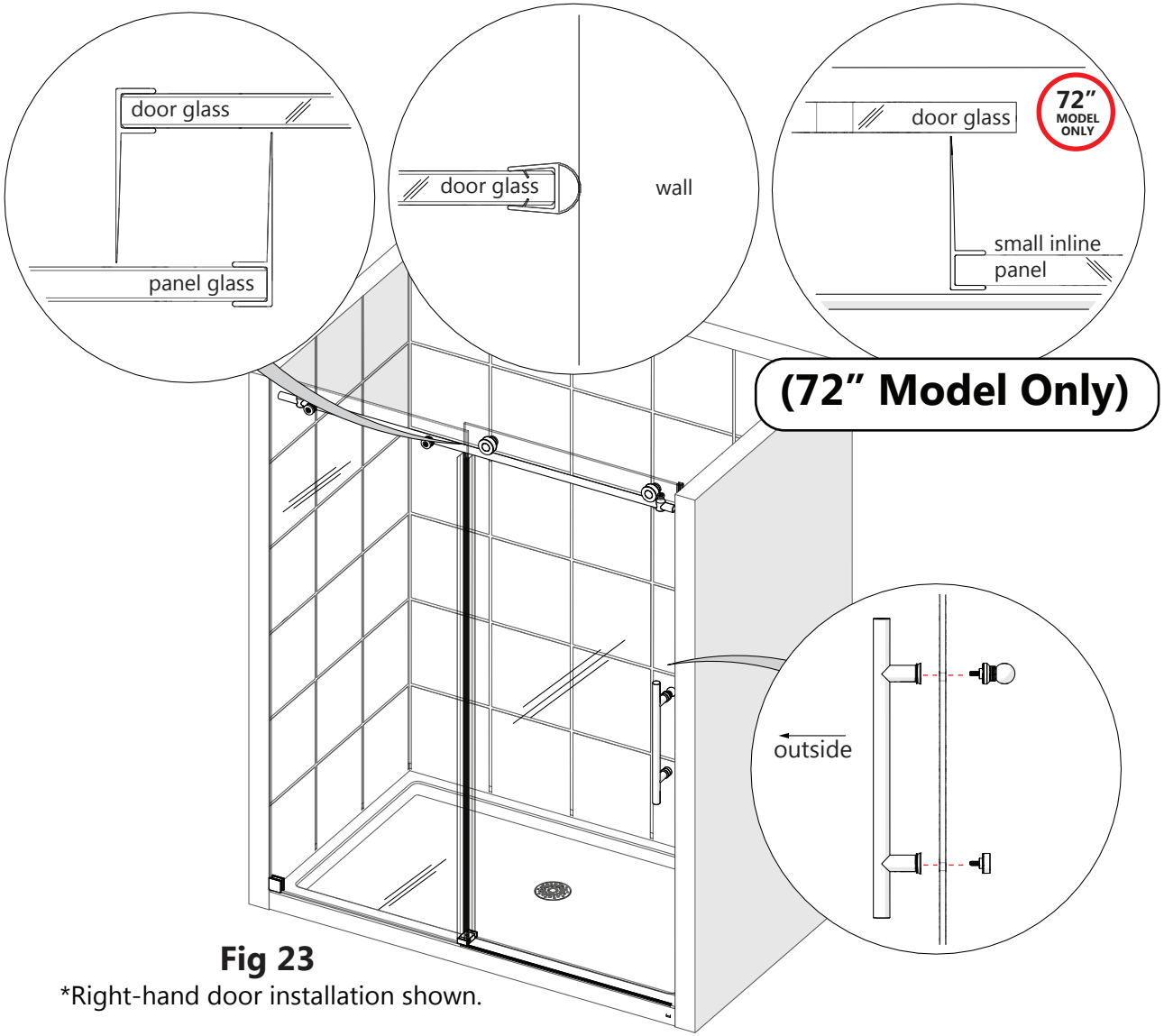


**Fig 23**
*Right-hand door installation shown.

**Parts Needed**

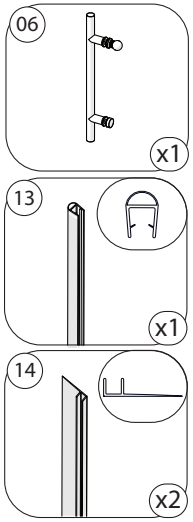


**Tools Needed**

NOTE

**For the 72" Model:** Attach the **Vertical Vinyl Seal (#14)** to the edge of the **Small Inline Panel Glass (#23)**. The **Bulb Vinyl Seal (#13)** is not necessary with the 72" model.

TIP

Use a razor knife to trim the **Vertical Vinyl Seal (#14)** at the top to avoid interfering with the **Roller Guards (#29)** and at the bottom where the door meets the **SafeStop™ Bumper (#30)**. **(Fig 23)**



©2024 All Rights Reserved

24

# Door Stopper Installation

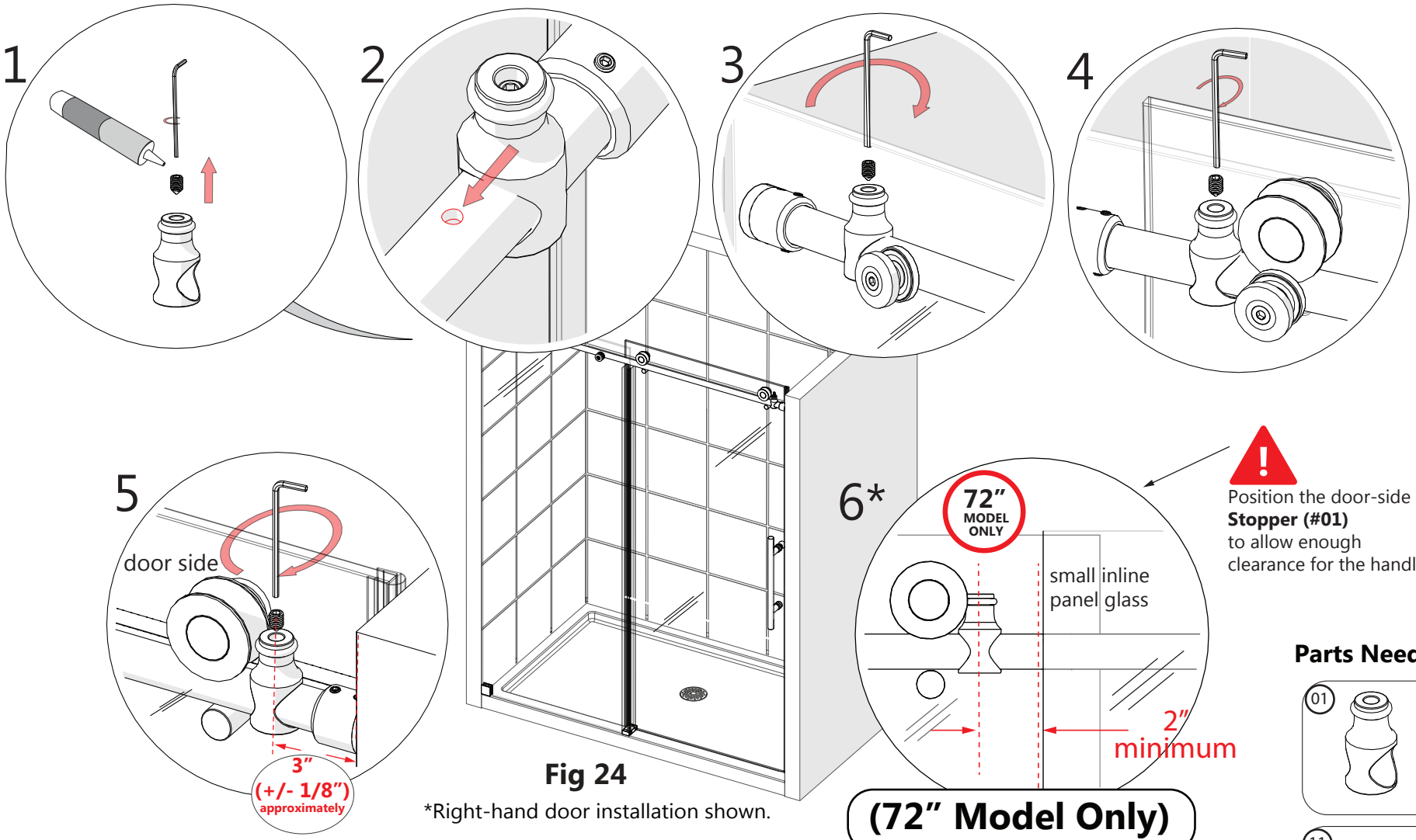


Fig 24

*Right-hand door installation shown.

Position the door-side **Stopper (#01)** to allow enough clearance for the handle.

**Parts Needed**

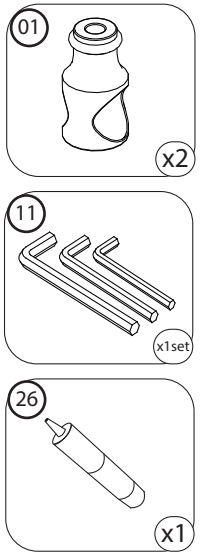


**Door Stopper Installation:**

1. Remove the set screw
2. Slide the **Door Stopper (#01)** onto the **Top Guide Rail (#03)**
3. Align with stopper hole in the guide rail (inline panel side only) **(Fig 24.2)**
4. Apply **Thread Lock Adhesive (#26)** to the set screw threads
5. Tighten screw into the stopper hole (inline panel side only)
6. Correctly position the door side stopper, use **Thread Lock Adhesive (#26)** and tighten the set screw. **(Fig 24.5)**

***For 72" Model**: Position the door-side **Stopper (#01)** at least 2" away from the small inline panel glass so that the handle cannot make contact with the glass when the door is in the closed position.



©2024 All Rights Reserved

25

# Bumper Installation - Option 1

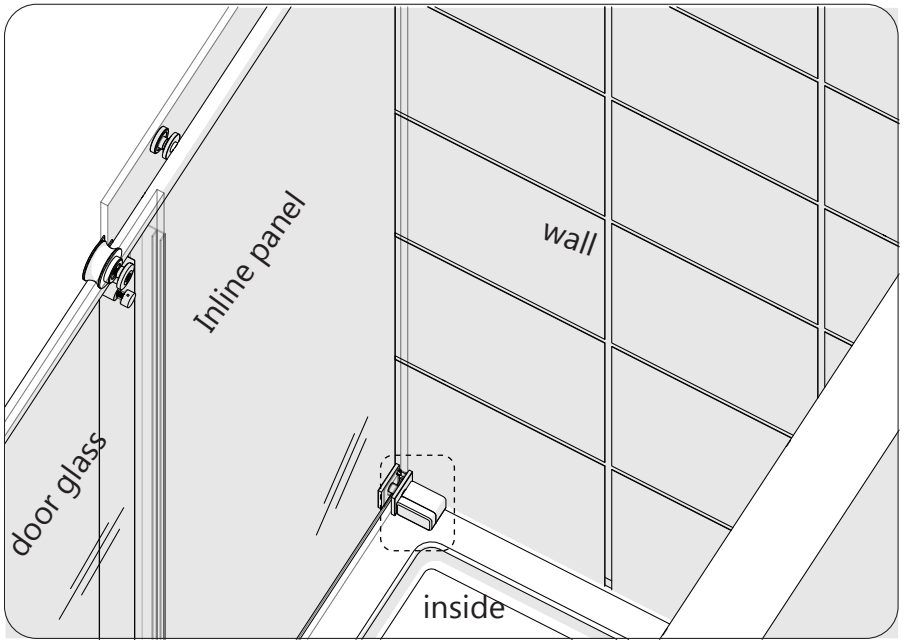


**Fig 25**
*Right-hand door installation shown.

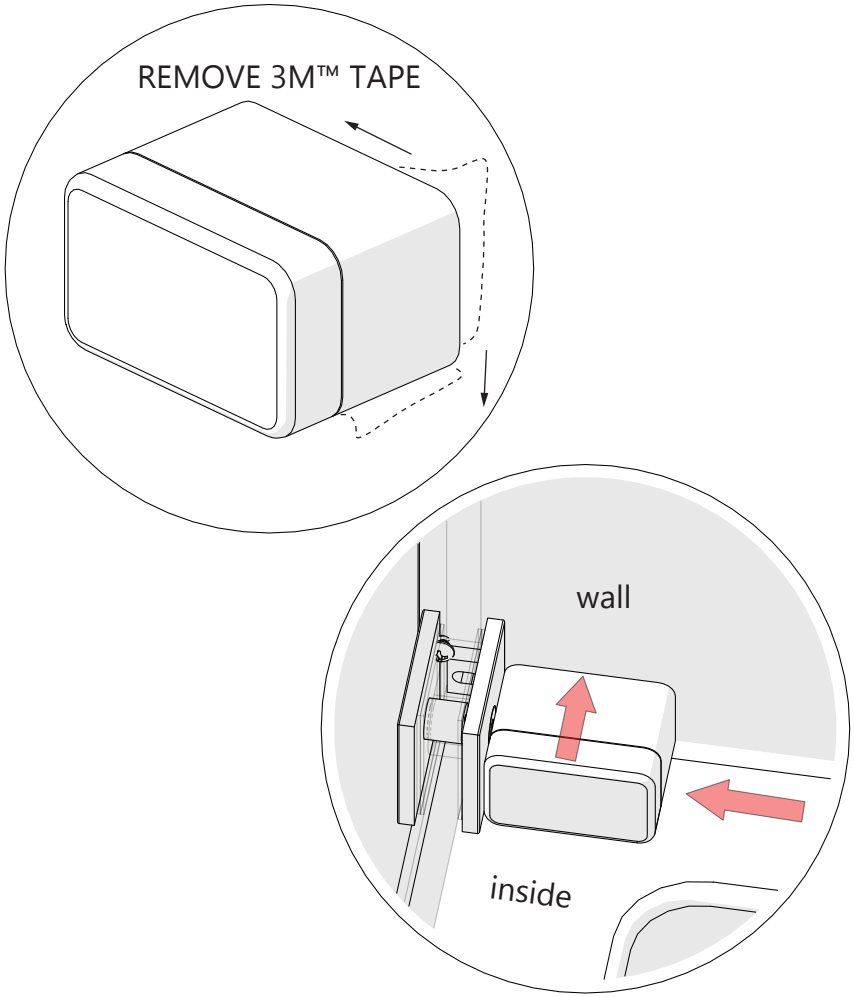


**NOTE** The **Bumper (#30)** is reversible for left or right wall installation.

**TIP** Install the **Bumper (#30)** using the **3M™** tape. Screwing the **Bumper** to the wall is optional **(see step 26*)**.

**NOTE** **The surfaces need to be clean and free of construction debris before installing the Bumper (#30). Wipe the area with an alcohol swab before installation.**

**Parts Needed**

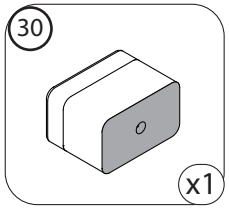




©2024 All Rights Reserved

26

# Bumper Screw Installation - Option 2

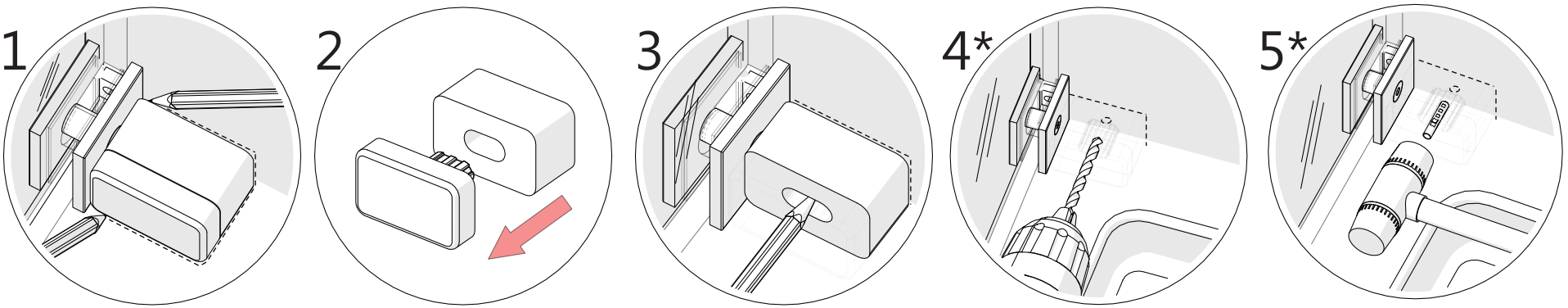


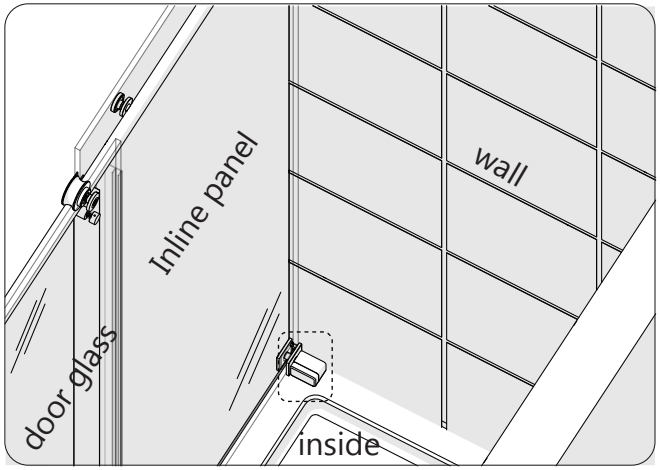


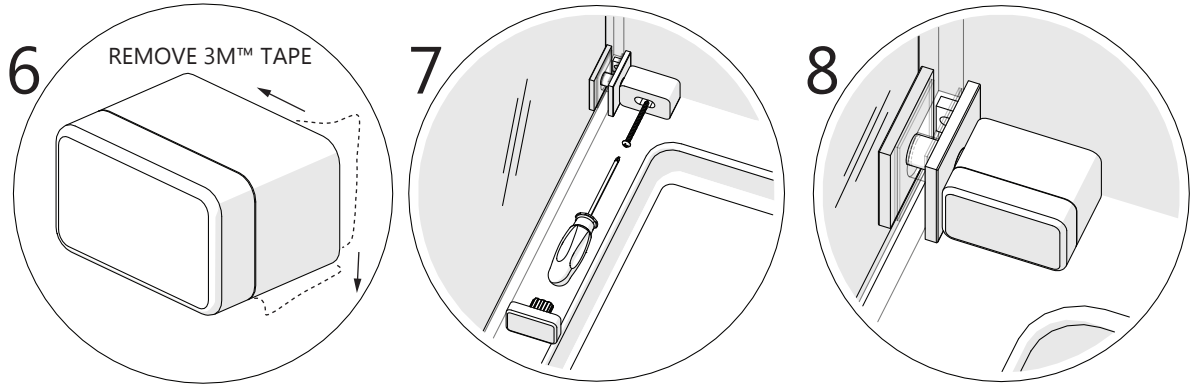


**Fig 26**
*Right-hand door installation shown.

**Parts Needed**

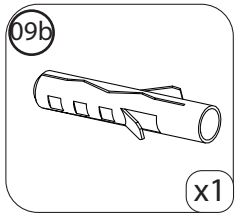


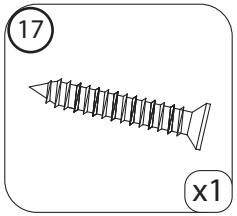


**Tools Needed**

TIP

Extender driver bit recommended for screw installation.

NOTE

**For installing the Bumper::**
- **<u>If a stud is present behind the wall</u>**: drill a **Ø3/16"(4mm)** hole up to the stud.

**OR**
- **<u>If no stud is present behind the wall</u>**: drill a **Ø5/16"(10mm)** hole and install the **Wall Anchor (#09b).**

Use caution to not damage/crack the wall/tile and to avoid any plumbing behind the wall when using the screw method .

NOTE

**<u>For 72" Model:</u>** This will be the side of the opening with the large stationary panel. Mark the position of the hole onto the wall. Drill the correct hole diameter (see Note above). Remove the 3M™ Tape and position the **Bumper (#30)** onto the threshold against the **Wall Bracket (#19)** and attach using the **ST4.2 x 40 Countersunk Screw (#17). (Fig 26)**



©2024 All Rights Reserved

**27**

**NOTE** **The surfaces need to be clean and free of debris before applying silicone.**

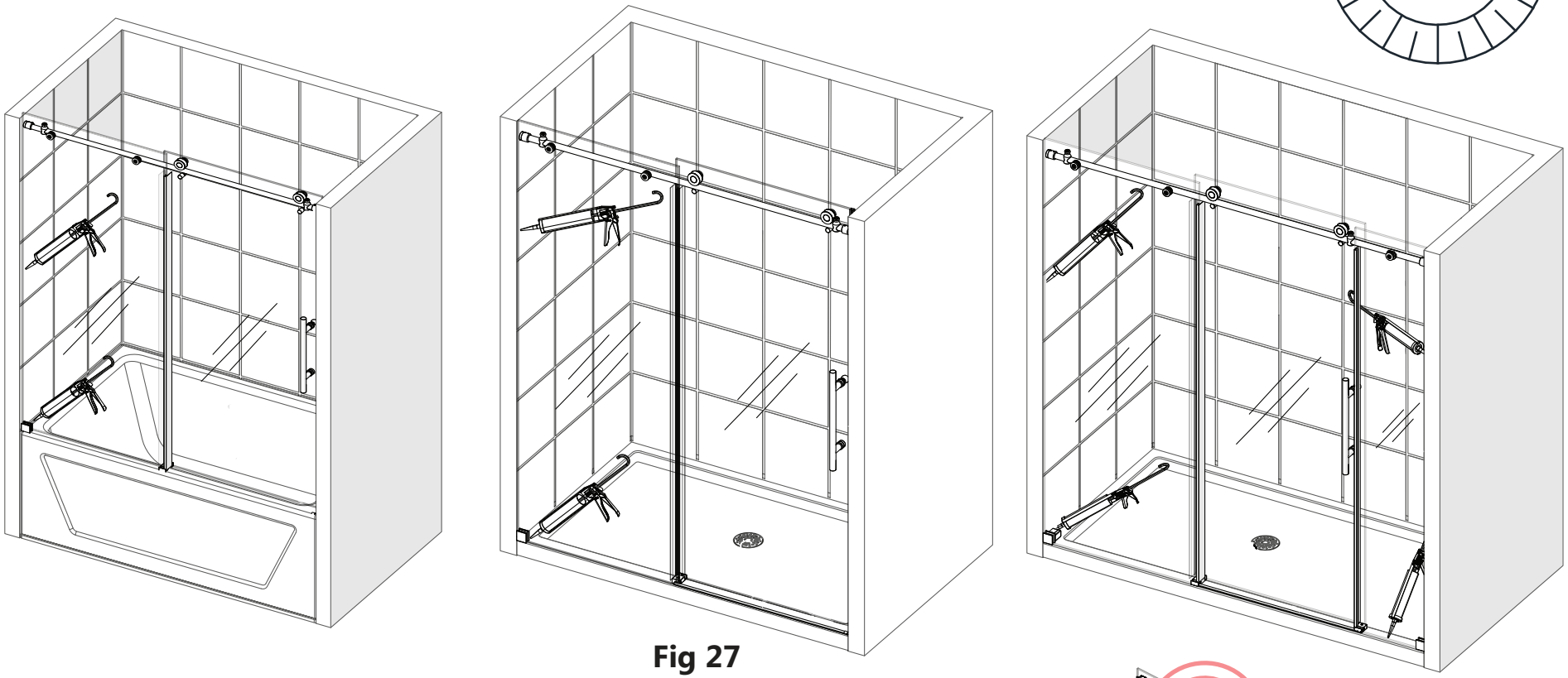

**Fig 27**

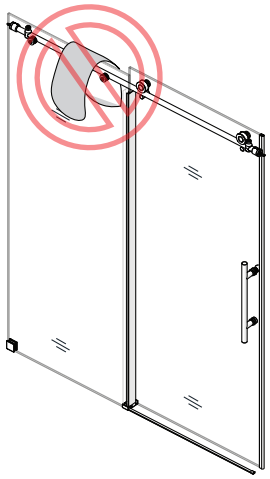

**Allow 24 hours for the silicone to cure before using the shower.**

**DO NOT** hang or drape a towel or wash cloth over the Top Guide Rail as this may cause the Roller Assembly wheels to get stuck and possibly cause serious damage or injury.

**Tools Needed**

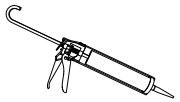



©2024 All Rights Reserved

# Product Maintenance

**BASES and BACKWALLS**: To ensure long lasting life for your acrylic back walls: wipe them off after each use with a soft cloth. To clean the acrylic back walls use non-abrasive sprays or cream based cleaners. Avoid the use of aerosol spray cleaners. Never use abrasive cleansers, metal brushes or scrapers that could permanently scratch or dull the surface.

**GLASS**: To ensure long lasting life for your glass shower products: wipe them off after each use with a soft cloth. Rinse and wipe off the glass using either a soft cloth or a squeegee to prevent soap buildup and water spots (Hard water can etch the surface of the glass over time if left to dry). To prevent scratching the surface: never use abrasive cleaners or cleaning products that contain scouring agents. Never use bristle brushes or abrasive sponges that may scratch the surface of the glass.

**HARDWARE**: To ensure a long lasting finish: wipe off all metal parts after each use with a soft cloth. Do not use abrasive cleaners or cleaning products containing ammonia, bleach or acid. If accidentally used, rinse the surface as soon as possible to prevent damage to the finish (peeling or corrosion). After cleaning the polished finishes, rinse thoroughly and wipe dry with a soft clean-cloth.
Clean stainless steel surfaces at least once a week. When applying stainless steel cleaner or polish to stainless steel hardware, work with the grain (not across the grain). Never use an abrasive sponge or cloth, steel wool or wired brush as these may permanently scratch the surfaces.

**NOTE** **To maximize the life of your door, it is important to regularly inspect the glass and other hardware for misalignment, proper attachment, and/or damage. Contact the manufacturer with any questions or concerns.**

## Maintenance Checklist

- ☐ **Guide Rail** level and tight
- ☐ **Guide Rail Brackets** tight to the walls
  - o All set screws tight
- ☐ **Panel Glass** secure
- ☐ **Panel Glass Brackets** tight
- ☐ **Guide Block** square to the threshold and glass
- ☐ Proper clearance beneath the door glass between the threshold and within the guide block
- ☐ **Door Glass** adjusted so that the **Bulb Vinyl Seal** makes even contact with the wall
- ☐ **Wheel Assemblies** tight
  - o Wheel **Roller Bolts** tight
  - o Wheel Assembly **safety set screws** tight and accessible
- ☐ **Stoppers** tight and positioned correctly
  - o **Panel-side Stopper** installed into the pre-drilled hole in the guide rail
  - o Adequate **Handle clearance** when the door is fully open
  - o **Door-side Stopper** positioned at approximately 3" (+/- 1/8") (as measured from the wall to the center of the stopper)
- ☐ Stopper stops the door and bulb vinyl seals to the wall
- ☐ **SafeStop™ Bumper** secure to the wall
- ☐ **Roller Guards** positioned within 1/16" beneath guide rail
- ☐ Remove vinyl seals to **inspect the edges of the Door Glass** for concealed damage
  - o **Damaged glass must be replaced!**
- ☐ Replace damaged or missing vinyl seals
- ☐ Inspect and replace silicone as necessary to prevent water leakage

©2024 All Rights Reserved

# Troubleshooting

| Problem/Symptom | Suggested Solution |
|---|---|
| Missing Parts | •Check all shipping/packaging material for missing parts/components.<br>•If not found, contact the manufacturer to order factory part replacement. |
| **Top Guide Rail (#03)** was cut too short or was cut from wrong end during installation. | •The Top Guide Rail (#03) is pre-cut for the model size, and will be shorter than the model width to allow for the Guide Rail Brackets (#08).<br>•If the Top Guide Rail (#03) is cut too short or cut from the wrong end, contact the manufacturer to order factory part replacement. |
| Water Leakage | •Confirm the **Dam Strip (#15)**, **Bulb Vinyl Strip (#13)**, and the **Vertical Vinyl Strips (#14)** are installed correctly. [see Page 34]<br>•Confirm that the entire unit has been properly sealed with silicone caulk; allow at least 24 hours to allow the silicone to cure and set before using the shower unit.<br>•Direct the shower head/water flow away from the area. |
| The door rolls open or closed | •Check the **Top Guide Rail (#03)** for level. Adjust the **Guide Rail Brackets (#08)** if necessary. [see Step 14]<br>•Adjust the **Roller Wheel Assemblies (#04)** on the door, if needed, to allow the door to seal evenly against the wall.<br>•To influence the **Top Guide Rail (#03)** slightly, the innermost **Glass-to-Rail Brackets (#07)** can be adjusted. |
| The door does not track smoothly | •Confirm the **Guide Block (#12)** is square to the **Panel Glass (#02)** and threshold. [see Steps 13a-136b]<br>•Confirm the **Door Glass (#05)** is not making contact with the bottom of the **Guide Block (#12)**.<br>•If the **Door Glass (#05)** needs to be raised, adjust the **Roller Wheel Assemblies (#04)** to raise it. [see Pages 31-32]<br>•Be sure that there is nothing on the **Top Guide Rail (#03)** that could block the **Roller Wheel Assemblies (#04)**.<br>•Check the **Roller Guards (#29)** are 1/16" beneath the **Top Guide Rail (#03)** and are not making any contact with the **Top Guide Rail (#03)**. [see Page 33] |
| Door travels too far in either direction | •Confirm both **Door Stoppers (#01)** are correctly installed and secured with the **Threadlock Adhesive (#26)**.<br>•Check that the **Door Stopper (#01)** on the **Panel Glass (#02)** side is tightly installed into the hole on the **Top Guide Rail (#03)**. The **Door Stoppers (#01)** should stop the door glass, not the wall. [see Page 35] |
| Mishandled glass | •Always take precautions when handling tempered glass.<br>•A glass suction cup and an assistant are helpful when carrying large, heavy lites of glass.<br>•Never allow tempered glass (especially the edges) to come in contact with any hard surface, which can cause chipping, splintering or complete glass failure.<br>•Any damaged glass should be immediately replaced.<br>•Do not use a shower with damaged glass.<br>•Leave plastic corner protectors on the glass until ready to install.<br>•Always protect the glass once removed from the box by padding the top and bottom of the glass with cardboard, styrofoam or other soft material until ready to install. |

TIP

Prior to contacting the manufacturer, please have the following information readily available:
- Purchase Order Information
    - Name, PO Number, Dealer/Vendor Name, etc.
- SKU/Model Number (see Pages 41-44)
- Factory Part Information (see Pages 41-44)

©2021 All Rights Reserved

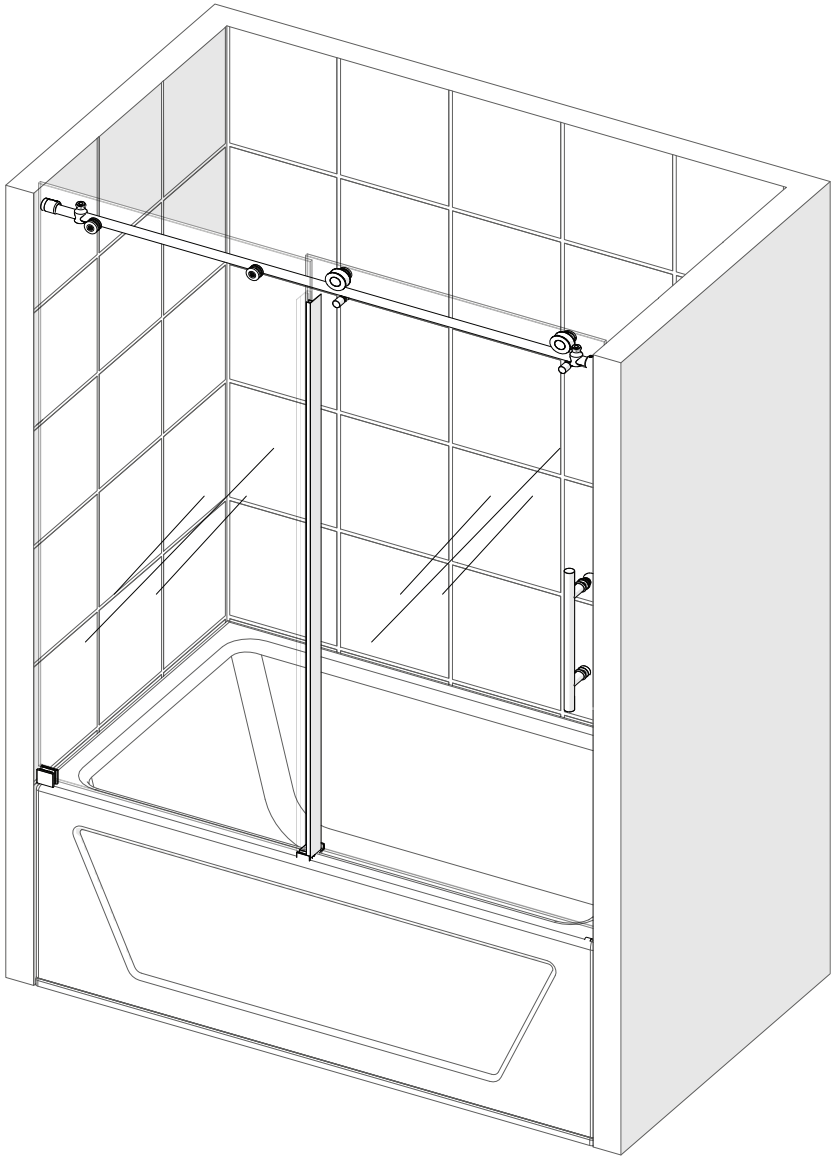

| PARTS INFORMATION | | |
|---|---|---|
| **ITEM #** | **ITEM DESCRIPTION** | **QTY** |
| 01 | Door Stopper | 2pcs |
| 02 | Panel Glass | 1pc |
| 03 | Top Guide Rail | 1pc |
| 04 | Roller Assembly | 2pcs |
| 05 | Door Glass | 1pc |
| 06 | Handle | 1pc |
| 07 | Glass-to-Rail Bracket | 2pcs |
| 08 | Guide Rail Bracket | 2pcs |
| 09a | Wall Anchor 3/8" (10mm) | 2pcs |
| 09b | Wall Anchor 5/16" (8mm) | 2pcs |
| 10 | ST6x65 Large Truss Head Screw | 2pcs |
| 11 | Allen Wrench (3mm, 4mm, 5mm) | 1set |
| 12 | Guide Block (with caps) | 1pc |
| 13 | Bulb Vinyl Seal | 1pc |
| 14 | Vertical Vinyl Seal | 2pcs |
| 15 | Dam Strip | 1pc |
| 16 | Dam Strip Cap | 1pc |
| 17 | ST4.2x40 Countersunk Screw | 2pcs |
| 18 | ST4.2x55 Truss Head Screw | 2pcs |
| 19 | Wall Bracket | 1pc |
| 26 | Thread Lock Adhesive | 1pc |
| 29 | Roller Guard | 2pcs |
| 30 | Bumper | 1pc |

Contact **the Manufacturer** for Part replacement, installation assistance or additional information



©2024 All Rights Reserved

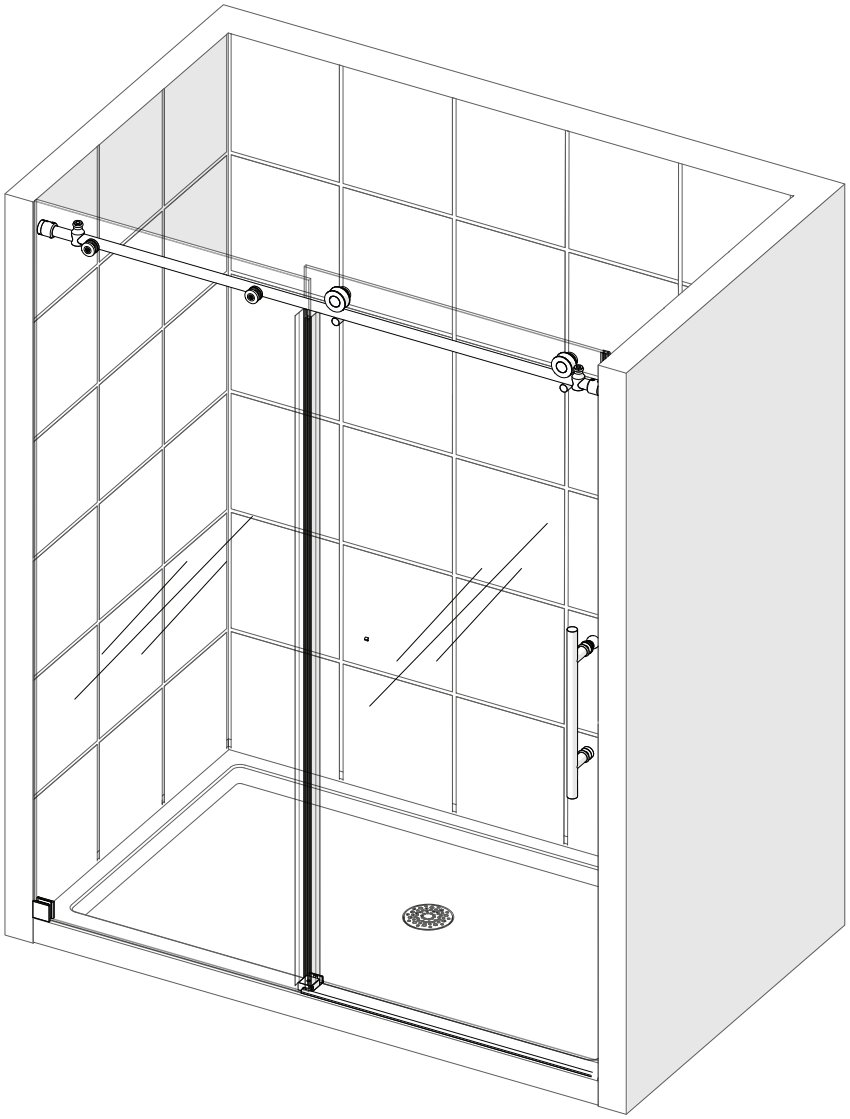

| FACTORY PARTS INFORMATION | | |
|---|---|---|
| **ITEM #** | **ITEM DESCRIPTION** | **QTY** |
| 01 | Door Stopper | 2pcs |
| 02 | Panel Glass | 1pc |
| 03 | Top Guide Rail | 1pc |
| 04 | Roller Assembly | 2pcs |
| 05 | Door Glass | 1pc |
| 06 | Handle | 1pc |
| 07 | Glass-to-Rail Bracket | 2pcs |
| 08 | Guide Rail Bracket | 2pcs |
| 09a | Wall Anchor 3/8” (10mm) | 2pcs |
| 09b | Wall Anchor 5/16” (8mm) | 2pcs |
| 10 | ST6x65 Large Truss Head Screw | 2pcs |
| 11 | Allen Wrench (3mm, 4mm, 5mm) | 1set |
| 12 | Guide Block (with caps) | 1pc |
| 13 | Bulb Vinyl Seal | 1pc |
| 14 | Vertical Vinyl Seal | 2pcs |
| 15 | Dam Strip | 1pc |
| 16 | Dam Strip Cap | 1pc |
| 17 | ST4.2x40 Countersunk Screw | 2pcs |
| 18 | ST4.2x55 Truss Head Screw | 2pcs |
| 19 | Wall Bracket | 1pc |
| 26 | Thread Lock Adhesive | 1pc |
| 29 | Roller Guard | 2pcs |
| 30 | Bumper | 1pc |



©2024 All Rights Reserved

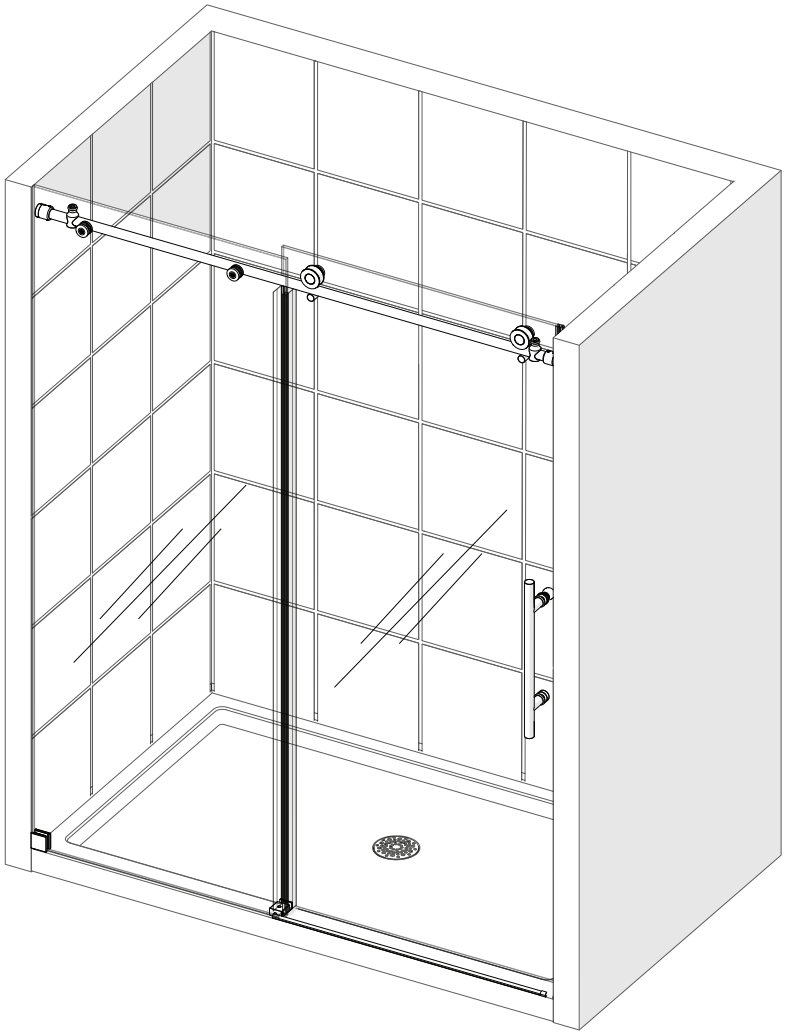

| FACTORY PARTS INFORMATION | | |
|---|---|---|
| **ITEM #** | **ITEM DESCRIPTION** | **QTY** |
| 1 | Door Stopper | 2pcs |
| 2 | Panel Glass | 1pc |
| 3 | Top Guide Rail (for 60”) | 1pc |
| 4 | Roller Assembly | 2pcs |
| 5 | Door Glass | 1pc |
| 6 | Handle | 1pc |
| 7 | Glass-to-Rail Bracket | 2pcs |
| 8 | Guide Rail Bracket | 2pcs |
| 09a | Wall Anchor 3/8” (10mm) | 2pcs |
| 09b | Wall Anchor 5/16” (8mm) | 2pcs |
| 10 | ST6x65 Large Truss Head Screw | 2pcs |
| 11 | Allen Wrench (3mm, 4mm, 5mm) | 1set |
| 12 | Guide Block (with caps) | 1pc |
| 13 | Bulb Vinyl Seal | 1pc |
| 14 | Vertical Vinyl Seal | 2pcs |
| 15 | Dam Strip | 1pc |
| 16 | Dam Strip Cap | 1pc |
| 17 | ST4.2x40 Countersunk Screw | 2pcs |
| 18 | ST4.2x55 Truss Head Screw | 2pcs |
| 19 | Wall Bracket | 1pc |
| 26 | Thread Lock Adhesive | 1pc |
| 29 | Roller Guard | 2pcs |
| 30 | Bumper | 1pc |



©2024 All Rights Reserved

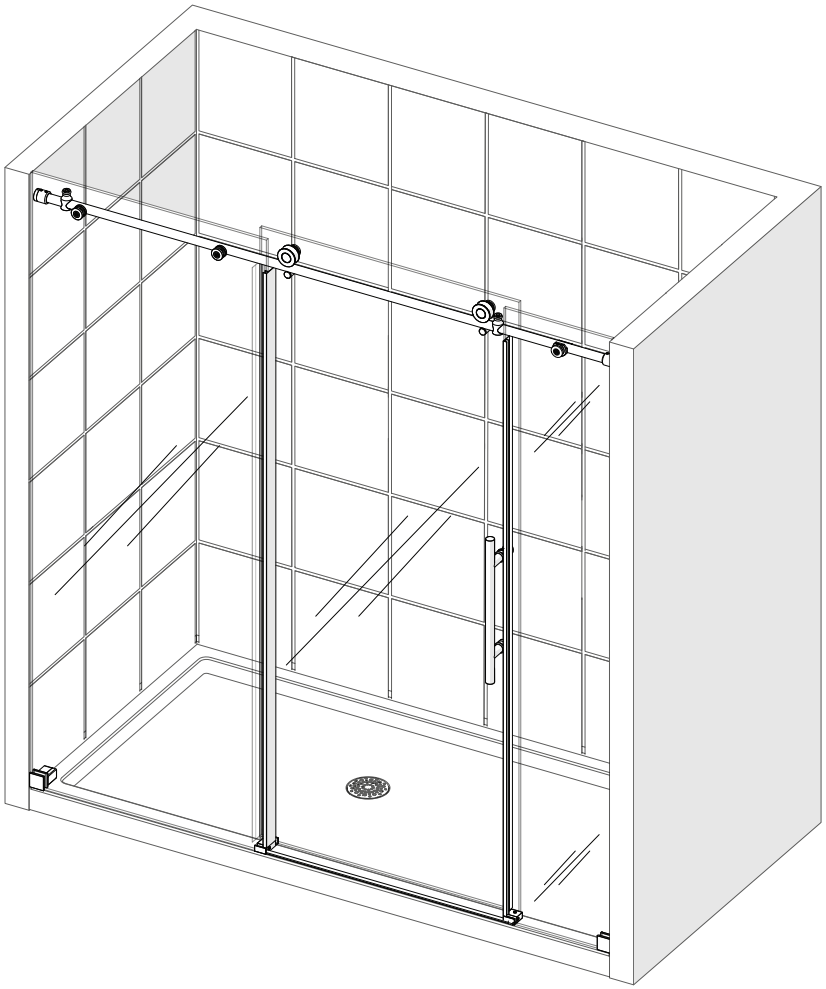

**(72” Model Only)**

| FACTORY PARTS INFORMATION | | |
|---|---|---|
| **ITEM #** | **ITEM DESCRIPTION** | **QTY** |
| 01 | Door Stopper | 2pcs |
| 02 | Panel Glass | 1pc |
| 04 | Roller Assembly | 2pcs |
| 05 | Door Glass | 1pc |
| 06 | Handle | 1pc |
| 07 | Glass-to-Rail Bracket | 2pcs |
| 08 | Guide Rail Bracket | 2pcs |
| 09a | Wall Anchor 3/8” (10mm) | 2pcs |
| 09b | Wall Anchor 5/16” (8mm) | 2pcs |
| 10 | ST6x65 Large Truss Head Screw | 2pcs |
| 11 | Allen Wrench (3mm, 4mm, 5mm) | 1set |
| 12 | Guide Block (with caps) | 1pc |
| 14 | Vertical Vinyl Seal | 2pcs |
| 15 | Dam Strip (for 72”) | 1pc |
| 16 | Dam Strip Cap | 1pc |
| 17 | ST4.2x40 Countersunk Screw | 2pcs |
| 18 | ST4.2x55 Truss Head Screw | 2pcs |
| 19 | Wall Bracket | 1pc |
| 26 | Thread Lock Adhesive | 1pc |
| 29 | Roller Guard | 2pcs |
| 30 | Bumper | 1pc |

| In-line Panel PARTS INFORMATION | | |
|---|---|---|
| **ITEM #** | **ITEM DESCRIPTION** | **QTY** |
| 09b | Wall Anchor 5/16” (8mm) | 2pcs |
| 11 | Allen Wrench (3mm, 4mm, 5mm) | 1 set |
| 14 | Vertical Vinyl Seal | 1pc |
| 18 | ST4.2x55 Truss Head Screw | 1pc |
| 19 | Wall Bracket | 1pc |
| 21 | Small In-line Panel Glass-to-Rail Bracket | 1pc |
| 22 | Small In-line Panel Glass Bottom Bracket | 1pc |
| 23 | Small In-line Panel Glass | 1pc |
| 24 | Top Guide Rail (for 72”) | 1pc |
| 25 | ST4.2x40 Countersunk Screw | 1pc |

**72”**
**MODEL ONLY**



©2024 All Rights Reserved

# NOTES

©2024 All Rights Reserved

# ROLLING BARN DOOR with FIXED PANEL

## *Shower and Tub Door Installation Instructions*

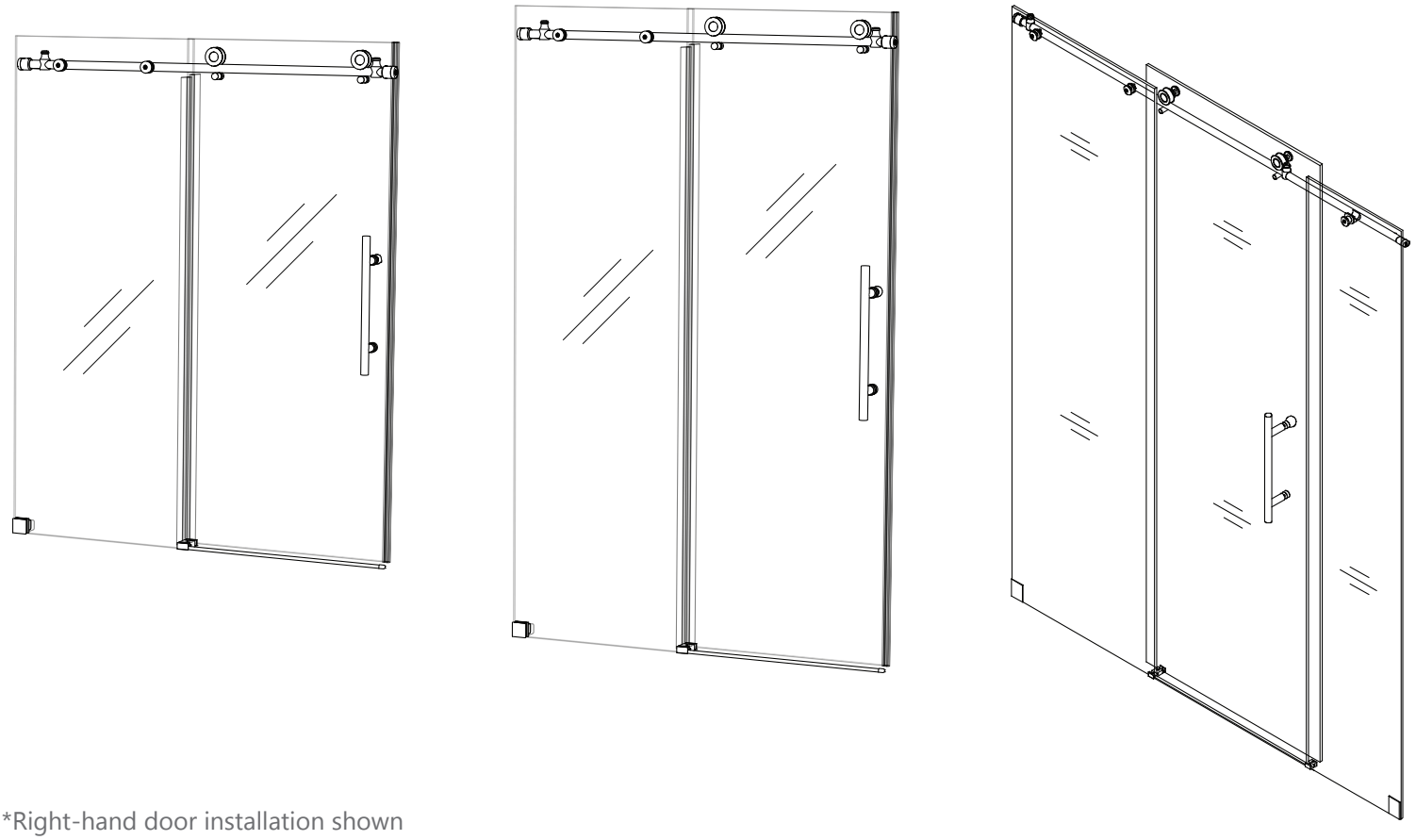

*Right-hand door installation shown

**IMPORTANT!**
The Manufacturer reserves the right to alter, modify or redesign products at any time without prior notice for the purpose of product improvement and customer experience.


©2024 All Rights Reserved