KINGSTON

TO ORDER PARTS, CALL: 1-877-252-7277
www.kingstonbrass.com

# KS3040,1,2,5,8ZX

## Single Handle Three-Way Diverter Valve with Square Trim Kit

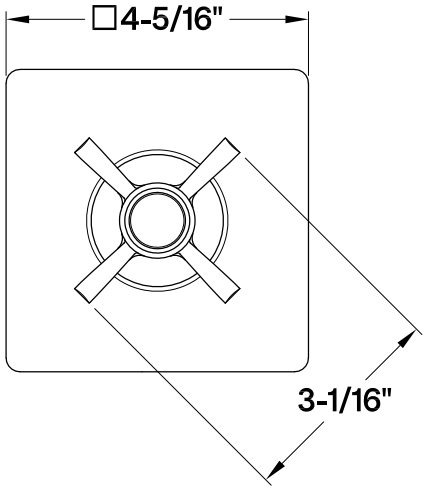


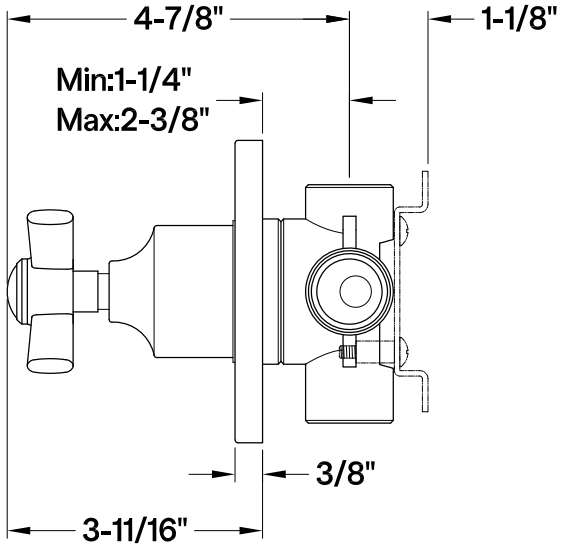


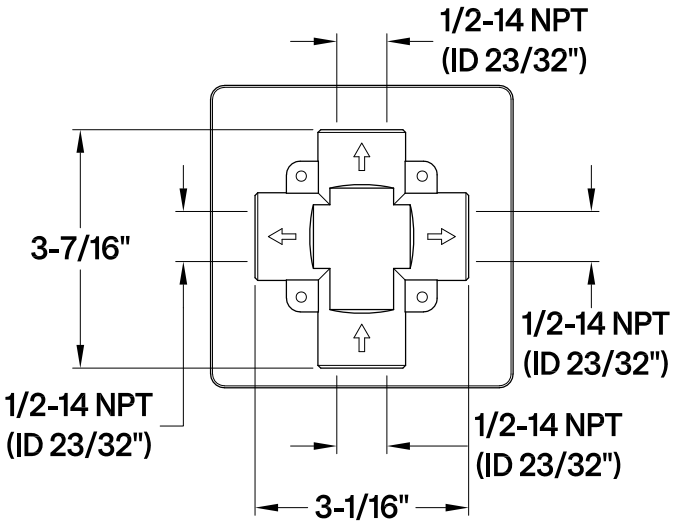


### Bracket

