ASSEMBLY INSTRUCTIONS

8-DRAWER DRESSER

A Top Panel

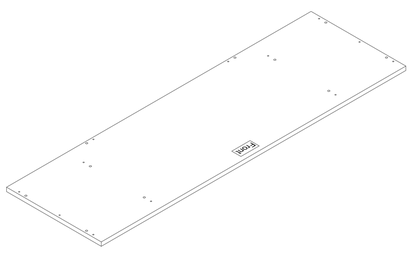

B Side Panel (Left)

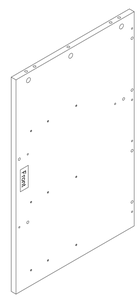

C Side Panel (Right)

D Bottom Frame

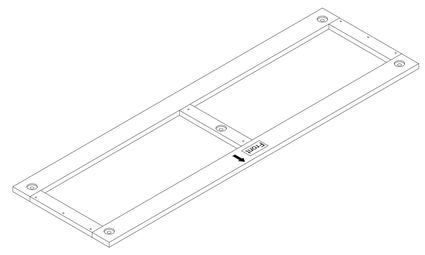

1pc

E Small Partition (Left)

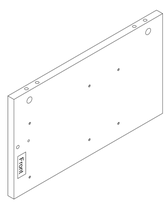

1pc

F Small Partition (Right)

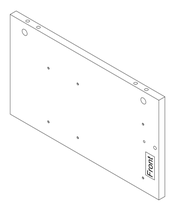

1pc

G Big Partition

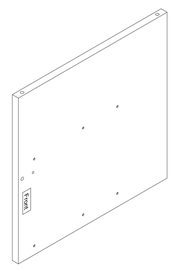

1pc

H Top Bar

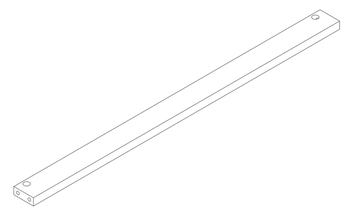

1pc

I Center Bar

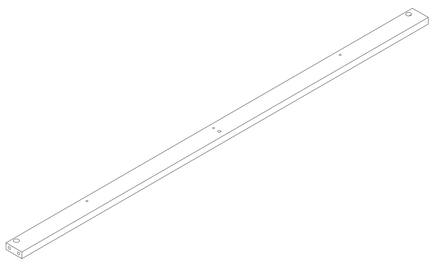

1pc

J Bottom Bar

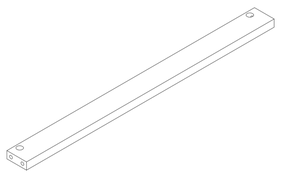

1pc

K Back Top Panel

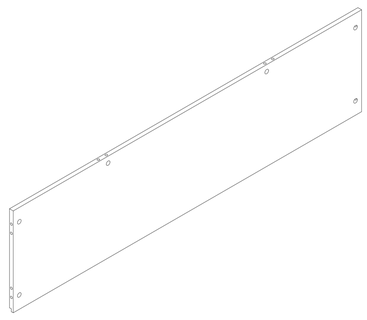

1pc

L Back Bottom Panel

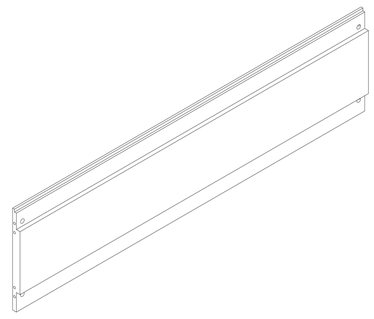

2pcs

M Post

2pcs

N Small Drawer Side (Left)

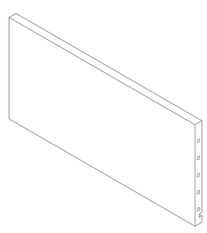

1pc

O Small Drawer Side (Right)

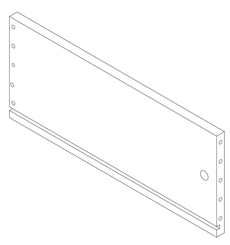

1pc

P Small Drawer Front

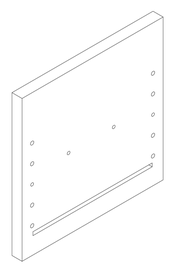

5pcs

Q Small Drawer Back

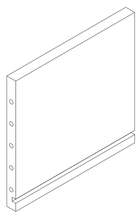

2pcs

R Small Drawer Base

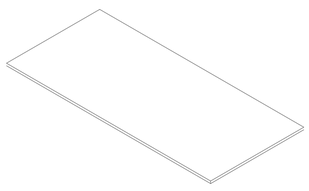

2pcs

S Medium Drawer Side (Left)

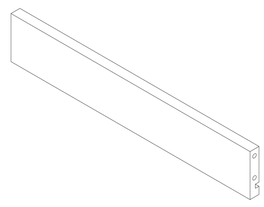

2pcs

T Medium Drawer Side (Right)

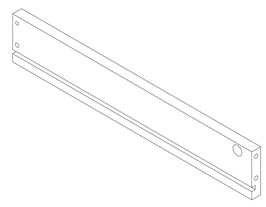

2pcs

U Medium Drawer Front

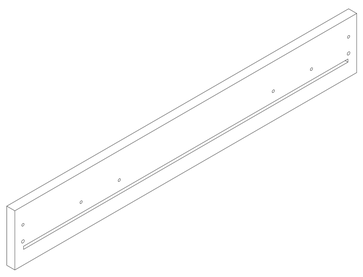

2pcs

V Medium Drawer Back

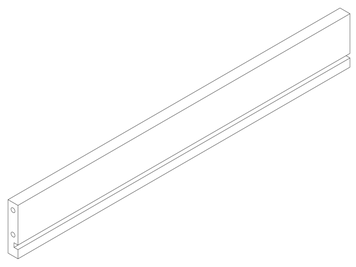

2pcs

W Medium Drawer Base

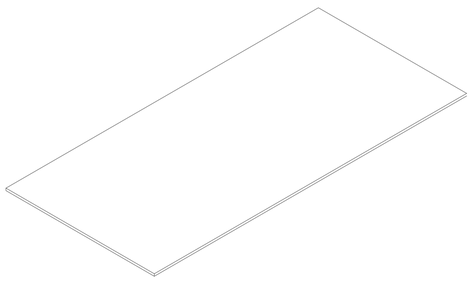

2pcs

X Big Drawer Side (Left)

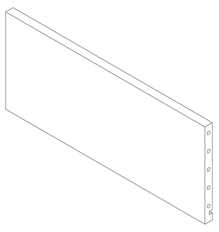

4pcs

Y Big Drawer Side (Right)

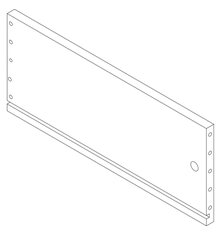

2pcs

Z Big Drawer Front

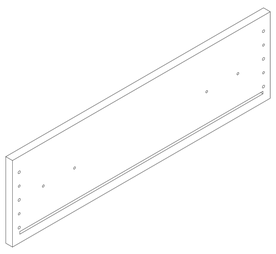

2pcs

AA Big Drawer Back

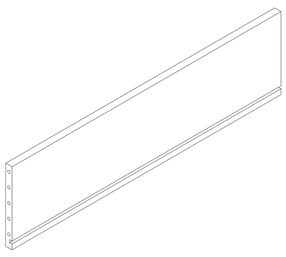

4pcs

AB Big Drawer Base

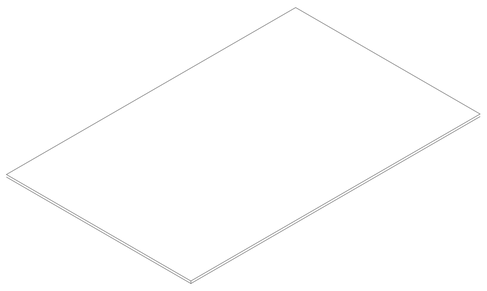

4pcs

AC Runner 300mm

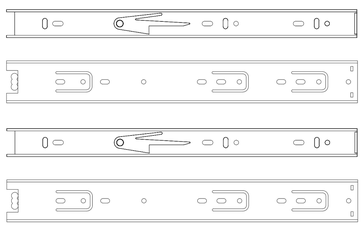

8sets

AD Handle

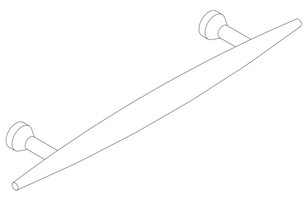

14pcs

AE Dowel M6 x 30mm

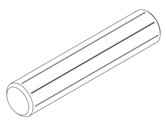

104pcs

AF Dowel M8 x 35mm

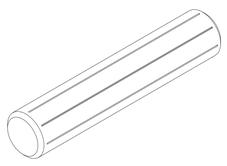

40pcs

AG Cam Bolt 5 x 25mm

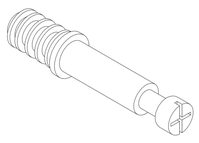

62pcs

AH Cam Lock 15 x 12mm

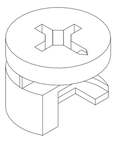

62pcs

AI Cam Lock Cover 17 x 5mm

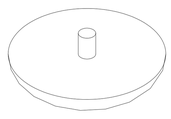

62pcs

AJ Screw M3 x 16mm

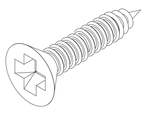

96pcs

AK Screw M4 x 38mm

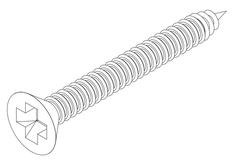

16pcs

AL Panhead Screw M4 x 22mm

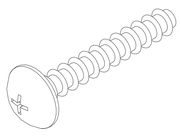

28pcs

AM Anti-Tip Kit

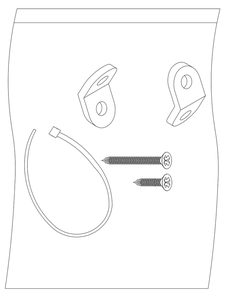

1set

These above pages list all the contents included in the box. Please take the time to identify the hardware as well as the individual components to this product. As you unpack and prepare for assembly, place the contents on a carpeted or padded area to protect them from damage.

1 Insert Cam Bolt (AG) into the Top Panel (A) with a screwdriver (not provided).

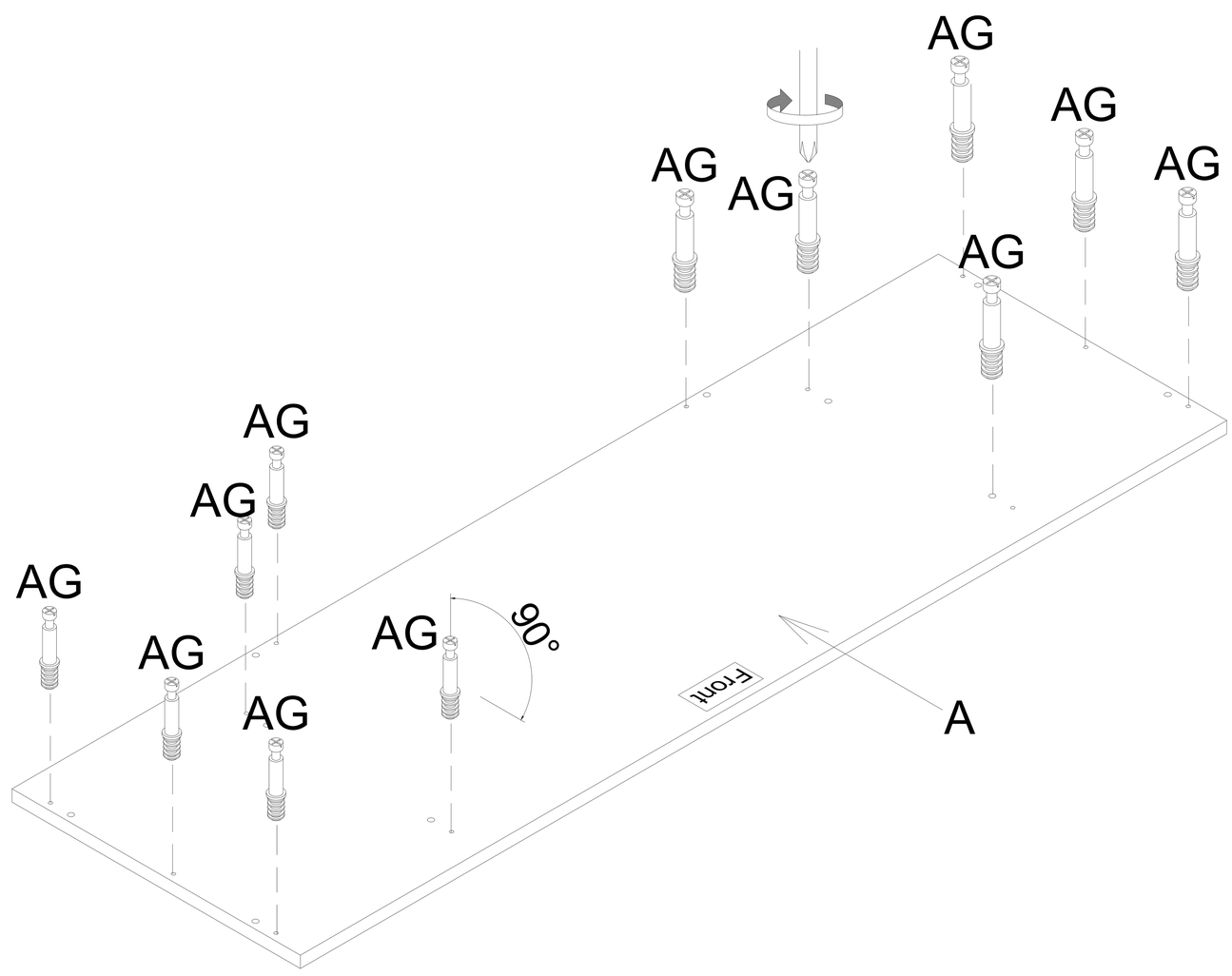

2 Insert Dowel (AF), Cam Bolt (AG) and Cam Lock (AH) into the Left & Right Side Panel (B & C) with a screwdriver (not provided).

NOTE : - Ensure the arrows on each Cam Lock (AH) point towards the nearest edge with holes.

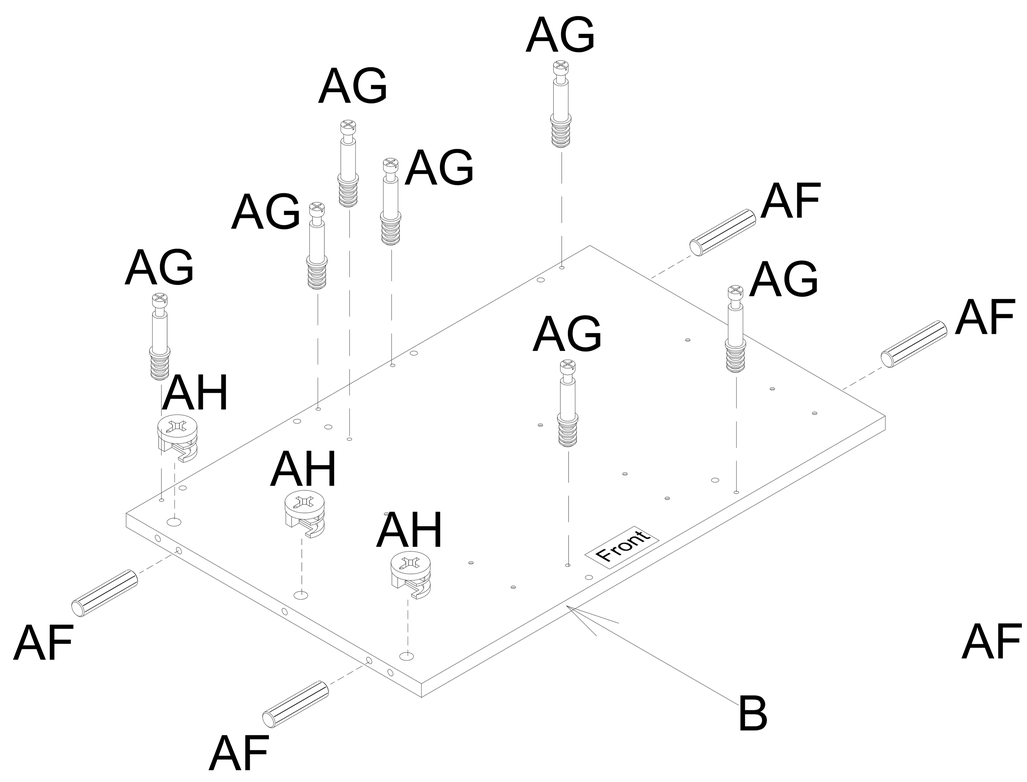

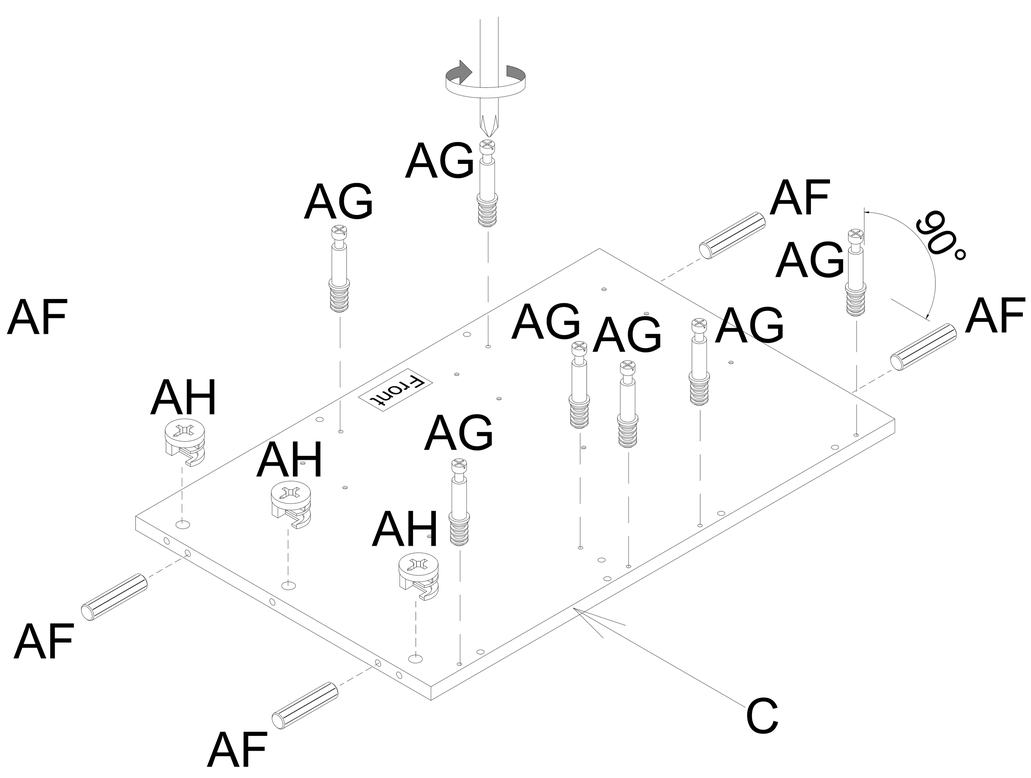

3 Disassemble the Runner (AC) into two parts. Attach one part with runner rollers to the Left & Right Side Panel (B & C) using Screw (AJ) with a screwdriver (not provided). Attach the other part with slides to the Left & Right Small Drawer Side (N & O) and Left & Right Big Drawer Side (X & Y).

NOTE : - Runner (AC) should face the front of the panel.
- Assemble Screw (AJ) from the front of the runner, starting with AJ^1, AJ^2 then AJ^3.
- Ensure screws are installed vertically without tilting to fit properly into the holes.

EXTENSION RUNNER DISASSEMBLE STEPS:

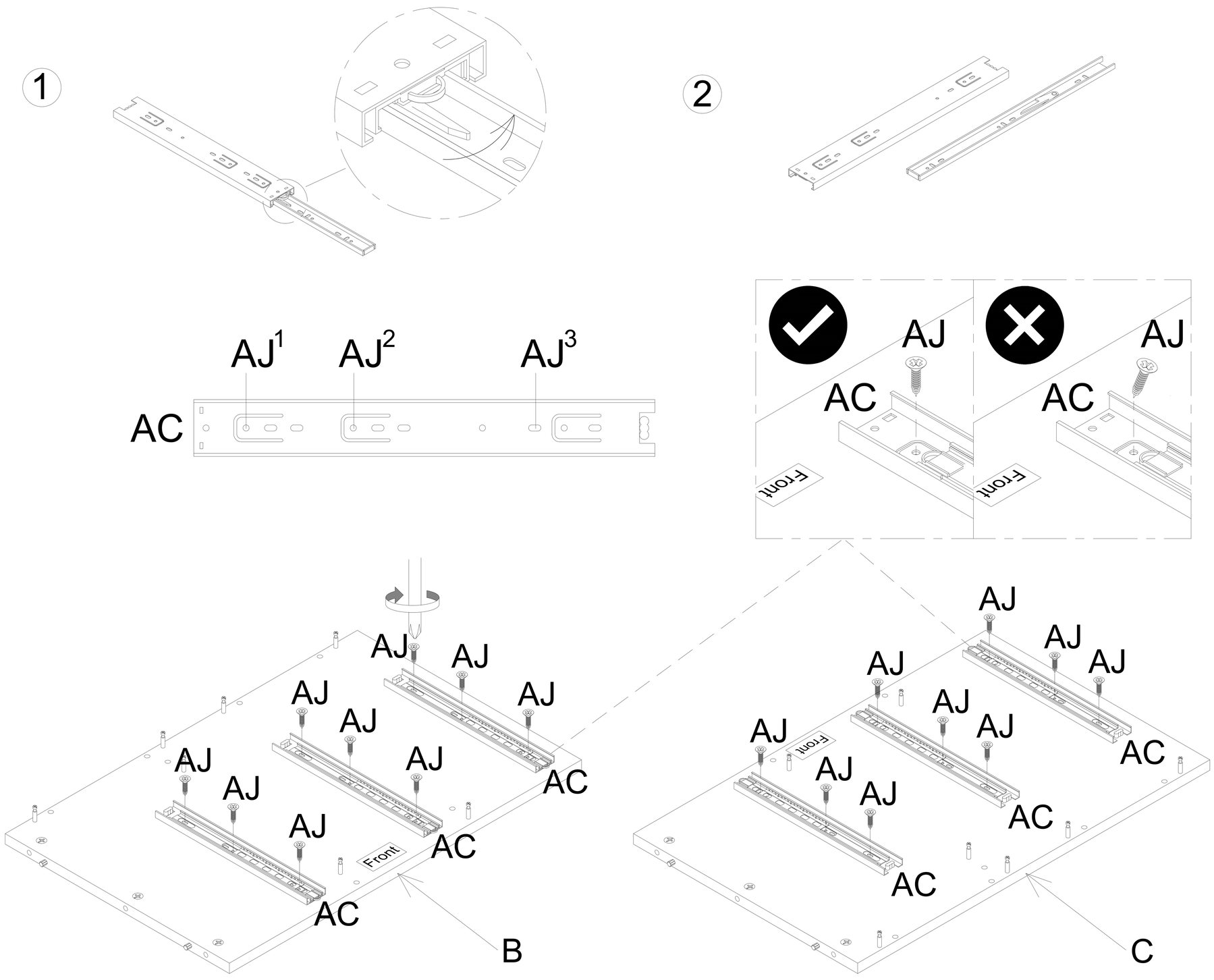

4 Insert Dowel (AF) and Cam Lock (AH) into the Left & Right Small Partition (E & F).

NOTE : - Ensure the arrows on each Cam Lock (AH) point towards the nearest edge with holes.

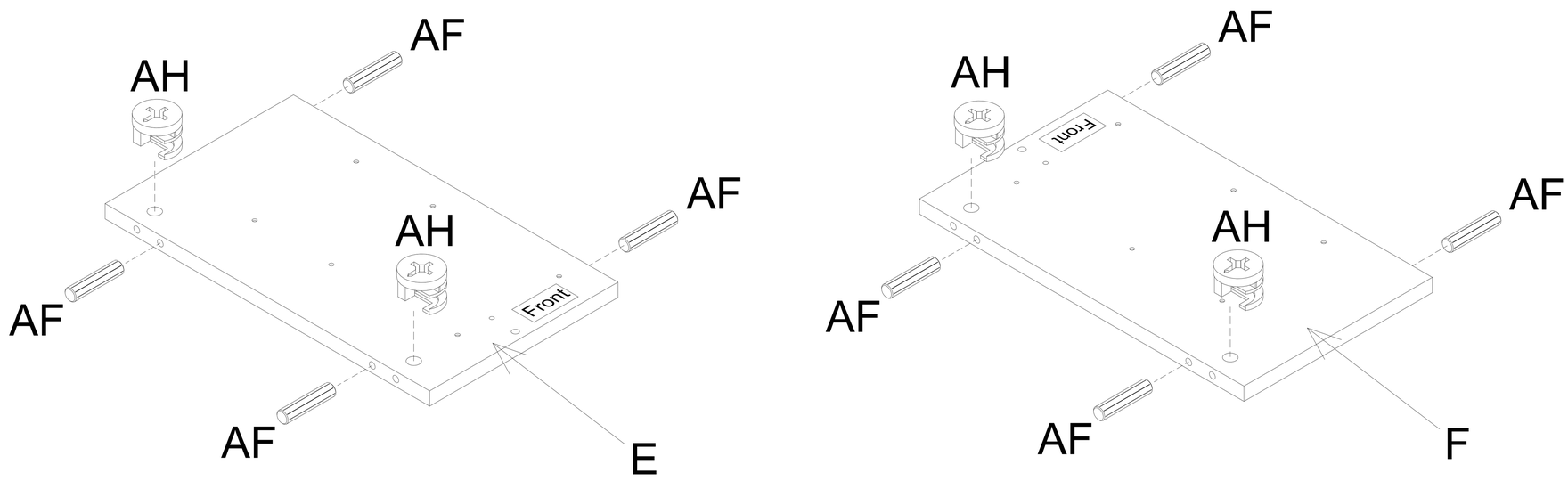

5 Disassemble the Runner (AC) into two parts. Attach one part with runner rollers to the Left & Right Small Partition (E & F) using Screw (AJ) with a screwdriver (not provided). Attach the other part with slides to the Left & Right Small Drawer Side (N & O) and the Left & Right Medium Drawer Side (S & T). Insert Cam Bolt (AG) into the Left & Right Small Partition (E & F) with a screwdriver (not provided).

NOTE : - Runner (AC) should face the front of the panel.
- Assemble Screw (AJ) from the front of the runner, starting with AJ^1, AJ^2 then AJ^3.
- Ensure screws are installed vertically without tilting to fit properly into the holes.

EXTENSION RUNNER DISASSEMBLE STEPS:

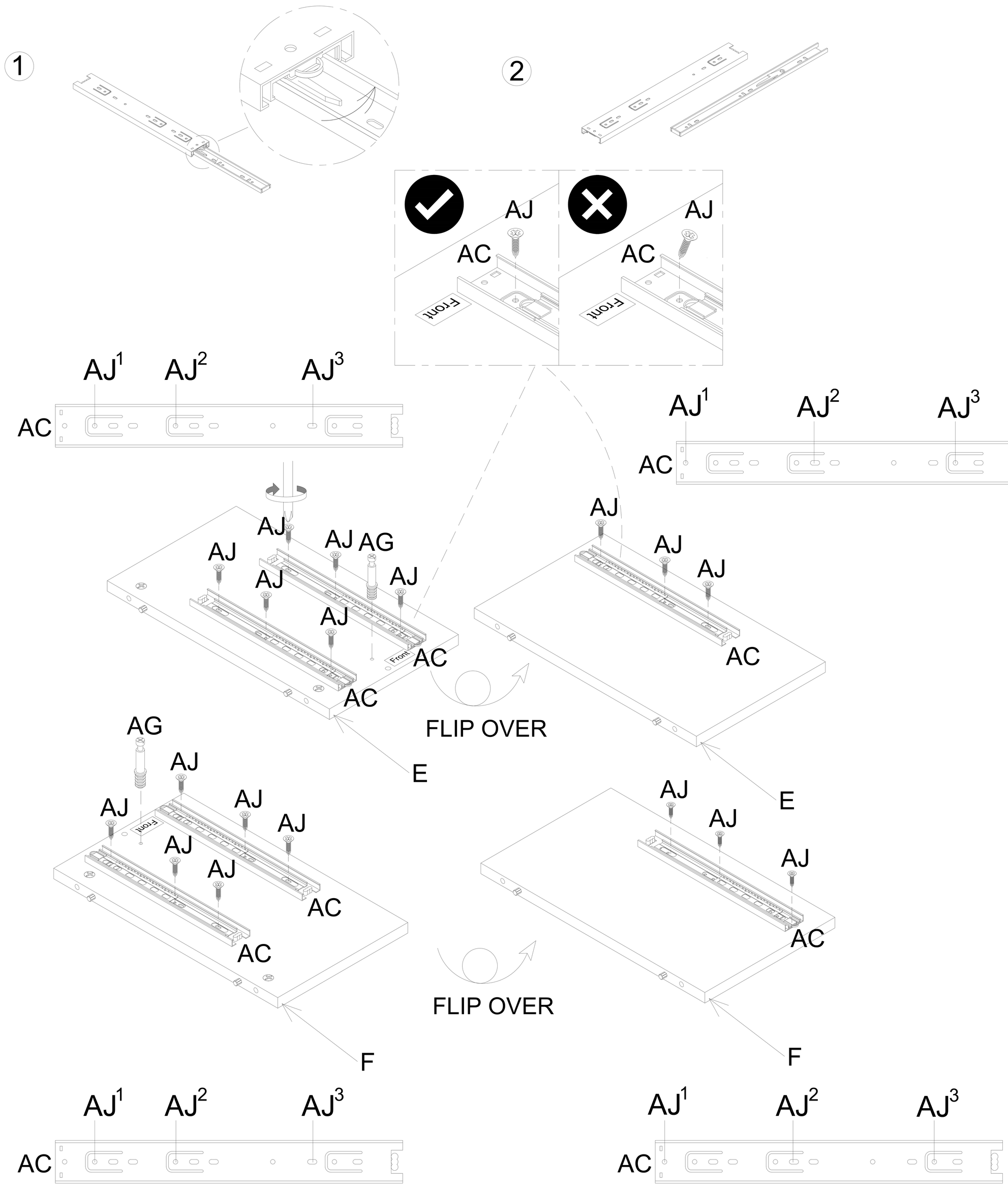

6 Insert Dowel (AF) into the Big Partition (G).

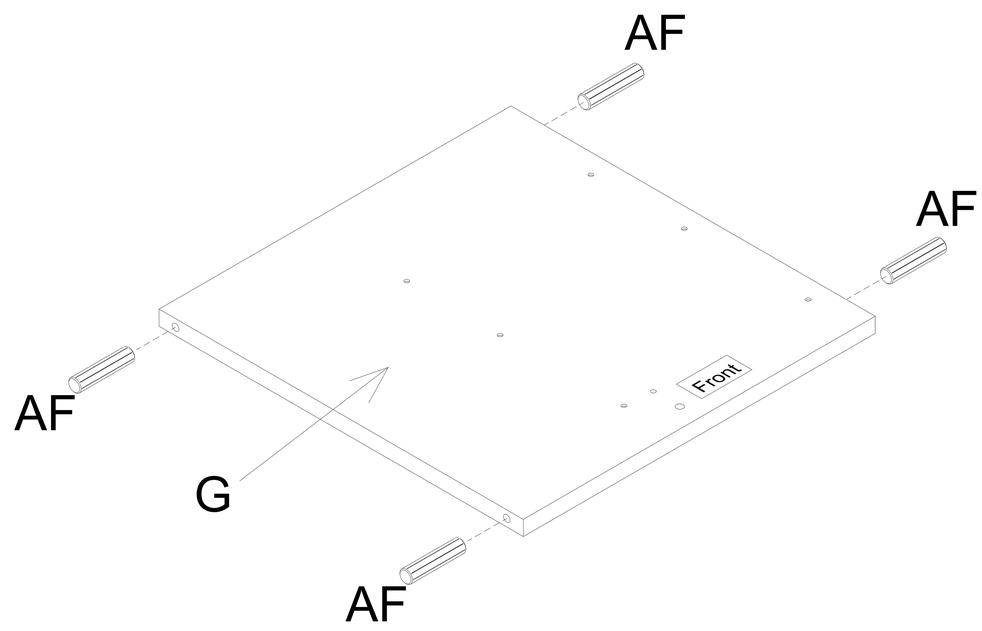

7 Disassemble the Runner (AC) into two parts. Attach one part with runner rollers to the Big Partition (G) using Screw (AJ) with a screwdriver (not provided). Attach the other part with slides to the Left & Right Big Drawer Side (X & Y). Insert Cam Bolt (AG) into the Big Partition (G) with a screwdriver (not provided).

NOTE : - Runner (AC) should face the front of the panel.
- Assemble Screw (AJ) from the front of the runner, starting with AJ^1, AJ^2 then AJ^3.
- Ensure screws are installed vertically without tilting to fit properly into the holes.

EXTENSION RUNNER DISASSEMBLE STEPS:

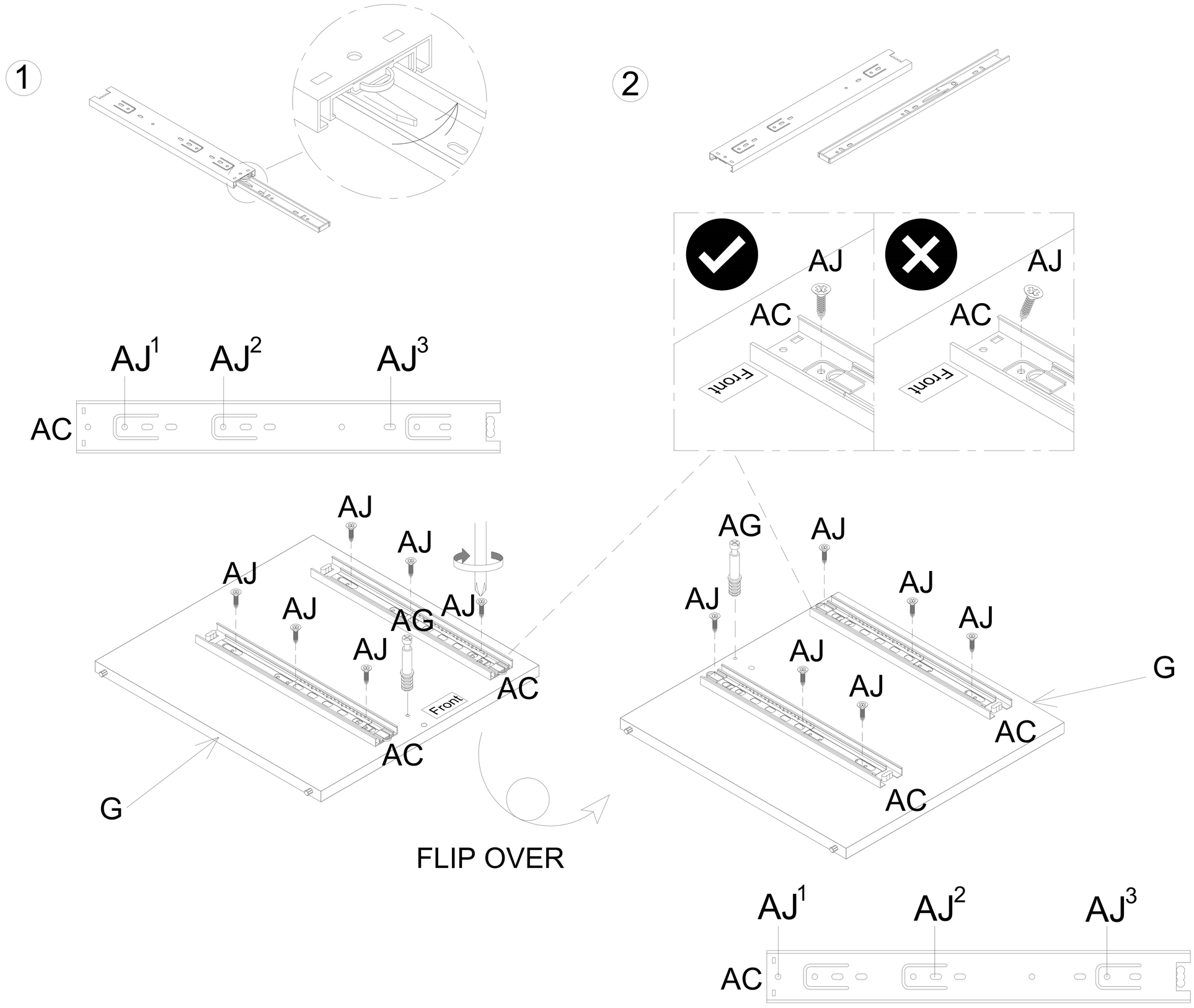

8 Insert Dowel (AF) and Cam Lock (AH) into the Back Top Panel (K), the Back Bottom Panel (L), the Top Bar (H), the Center Bar (I) and the Bottom Bar (J).

NOTE : - Ensure the arrows on each Cam Lock (AH) point towards the nearest edge with holes.

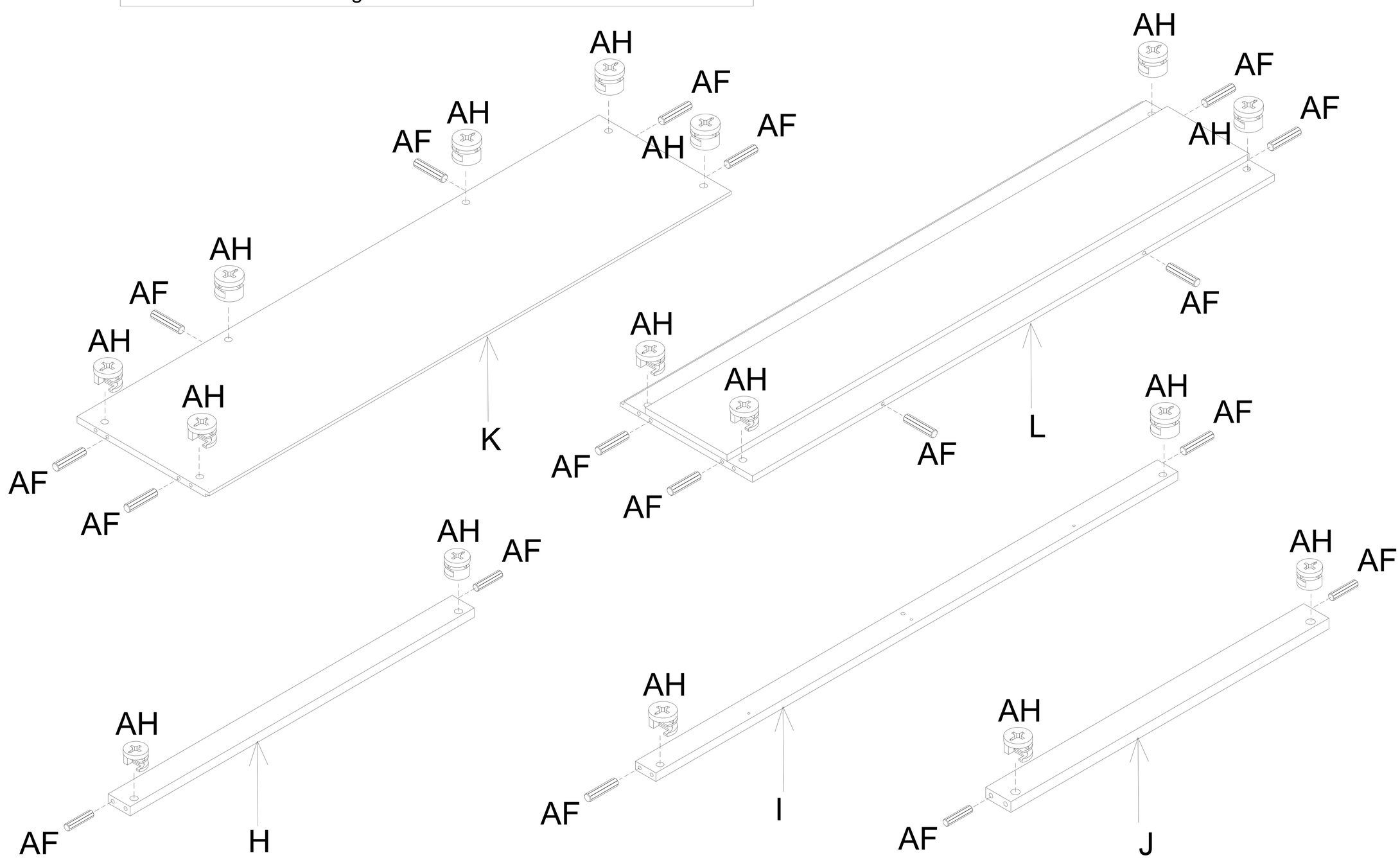

9 Attach the Top Bar (H) to the Left & Right Small Partition (E & F) and secure the Cam Lock (AH) with a screwdriver (not provided). Cover the Cam Lock (AH) with Cam Lock Cover (AI).

NOTE : - Do not over tighten the Cam Lock (AH).

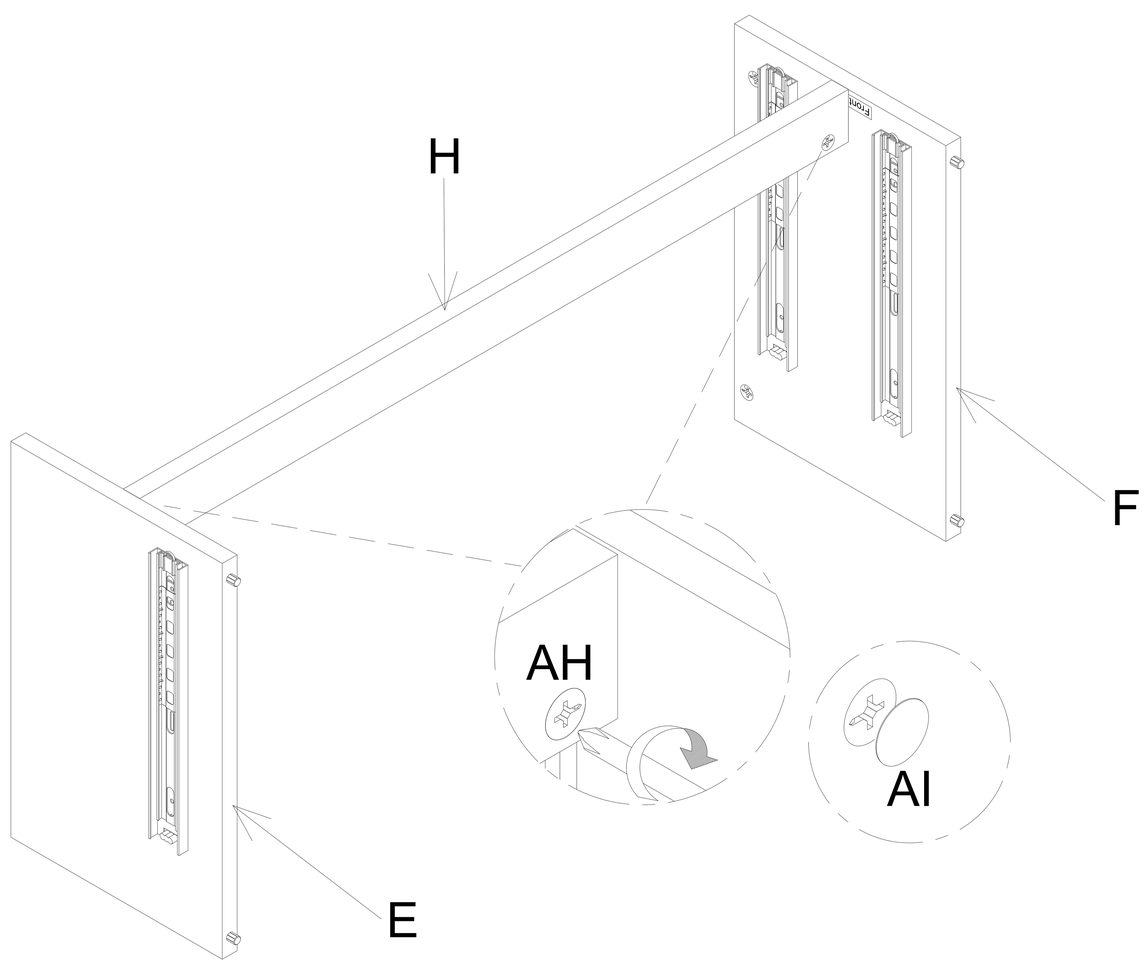

10 Attach both Center Bar (I) underneath the Left & Right Small Partition (E & F) using Screw (AK) with a screwdriver (not provided).

NOTE : - Do not over tighten the Screw (AK).

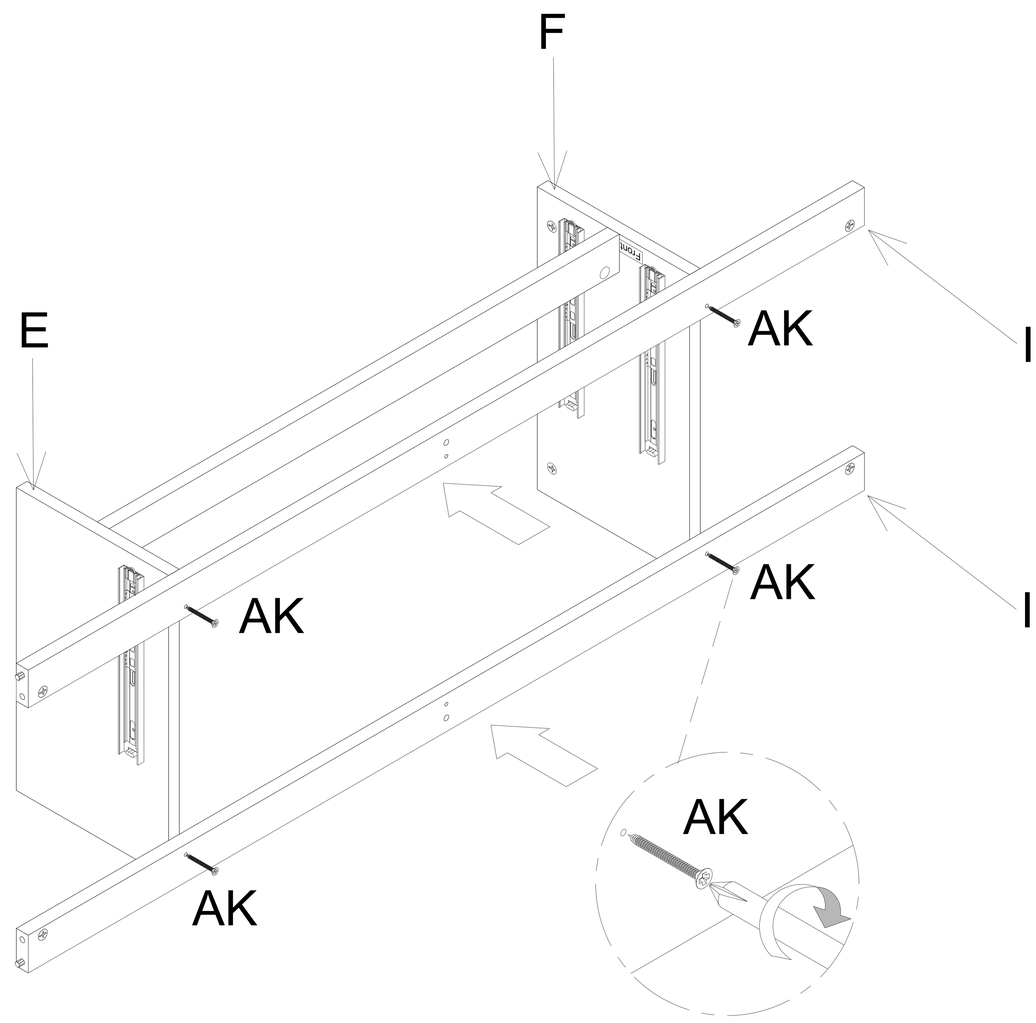

11 Attach the Big Partition (G) underneath both Center Bar (I) using Screw (AK) with a screwdriver (not provided).

NOTE : - Do not over tighten the Screw (AK).

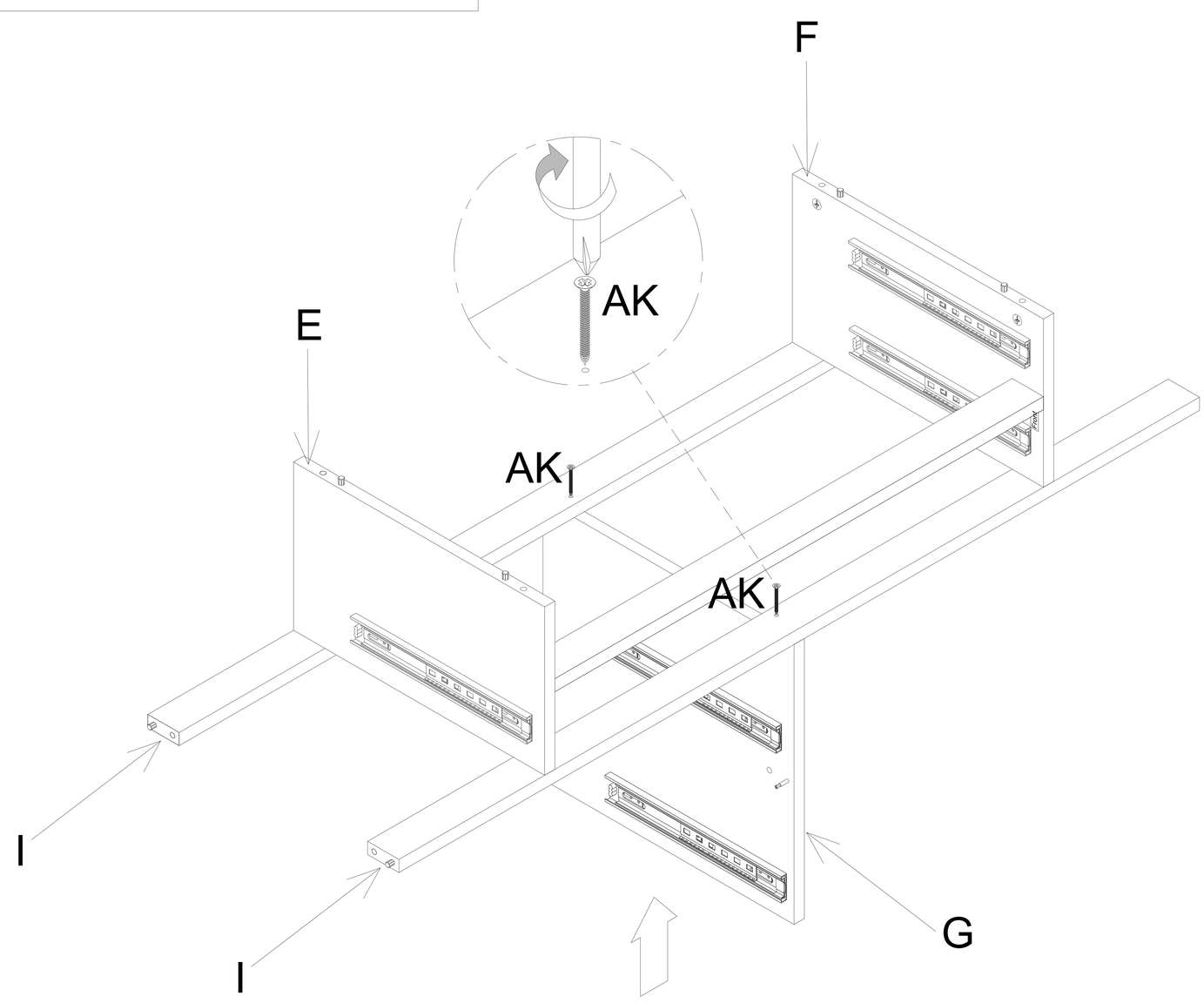

12 Attach both Bottom Bar (J) to the Big Partition (G) and secure the Cam Lock (AH) with a screwdriver (not provided). Cover the Cam Lock (AH) with Cam Lock Cover (AI).

NOTE : - Do not over tighten the Cam Lock (AH).

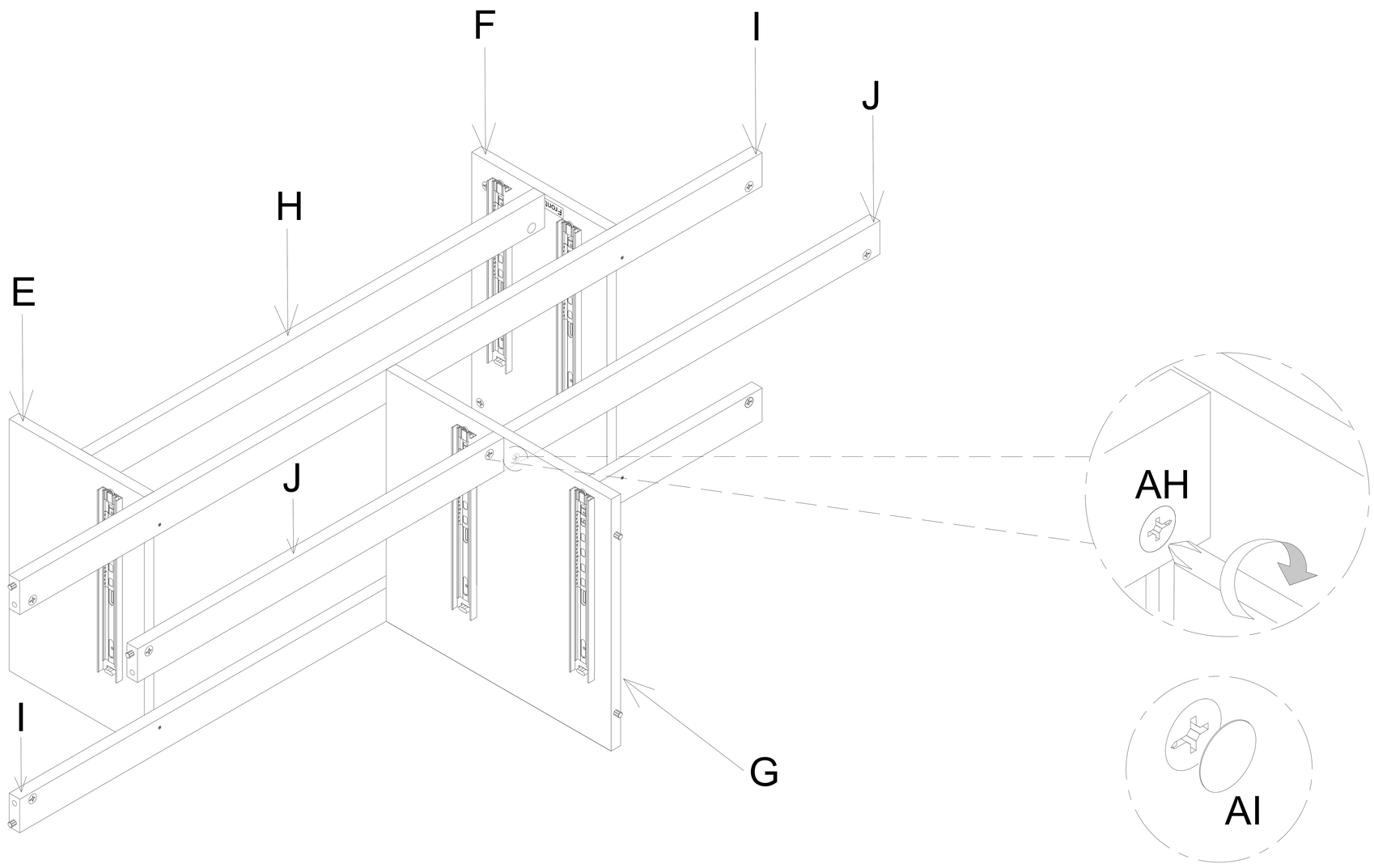

13 Attach the Left & Right Side Panel (B & C) to the Center Bar (I), Bottom Bar (J), and the Back Top & Bottom Panel (K & L) and secure the Cam Lock (AH) with a screwdriver (not provided). Cover the Cam Lock (AH) with Cam Lock Cover (AI).

NOTE : - Do not over tighten the Cam Lock (AH).

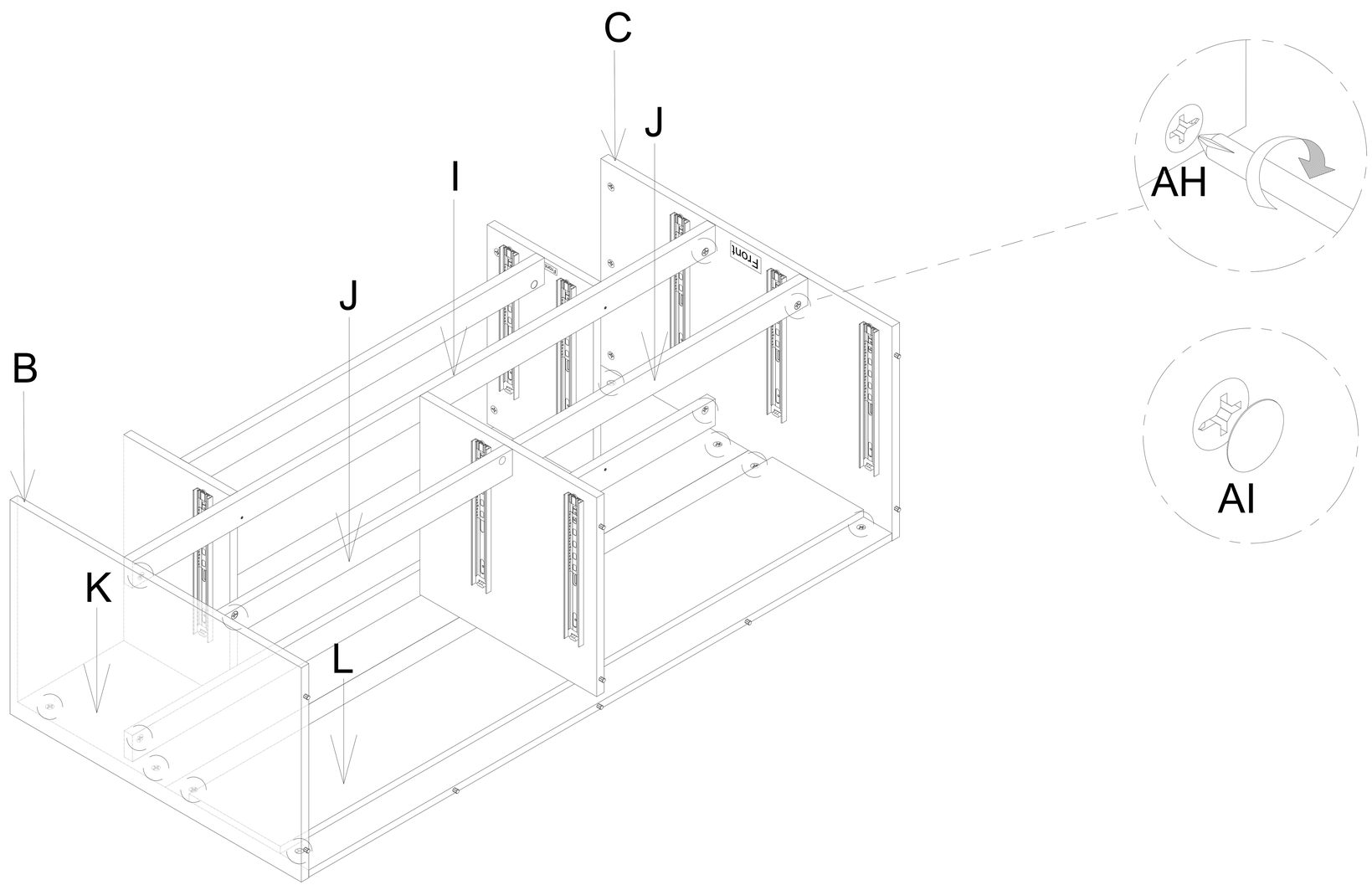

14 Attach the Bottom Frame (D) to the Left & Right Side Panel (B & C), Big Partition (G) and the Back Bottom Panel (L) using Screw (AK) with a screwdriver (not provided).

NOTE : - Do not over tighten the Screw (AK).

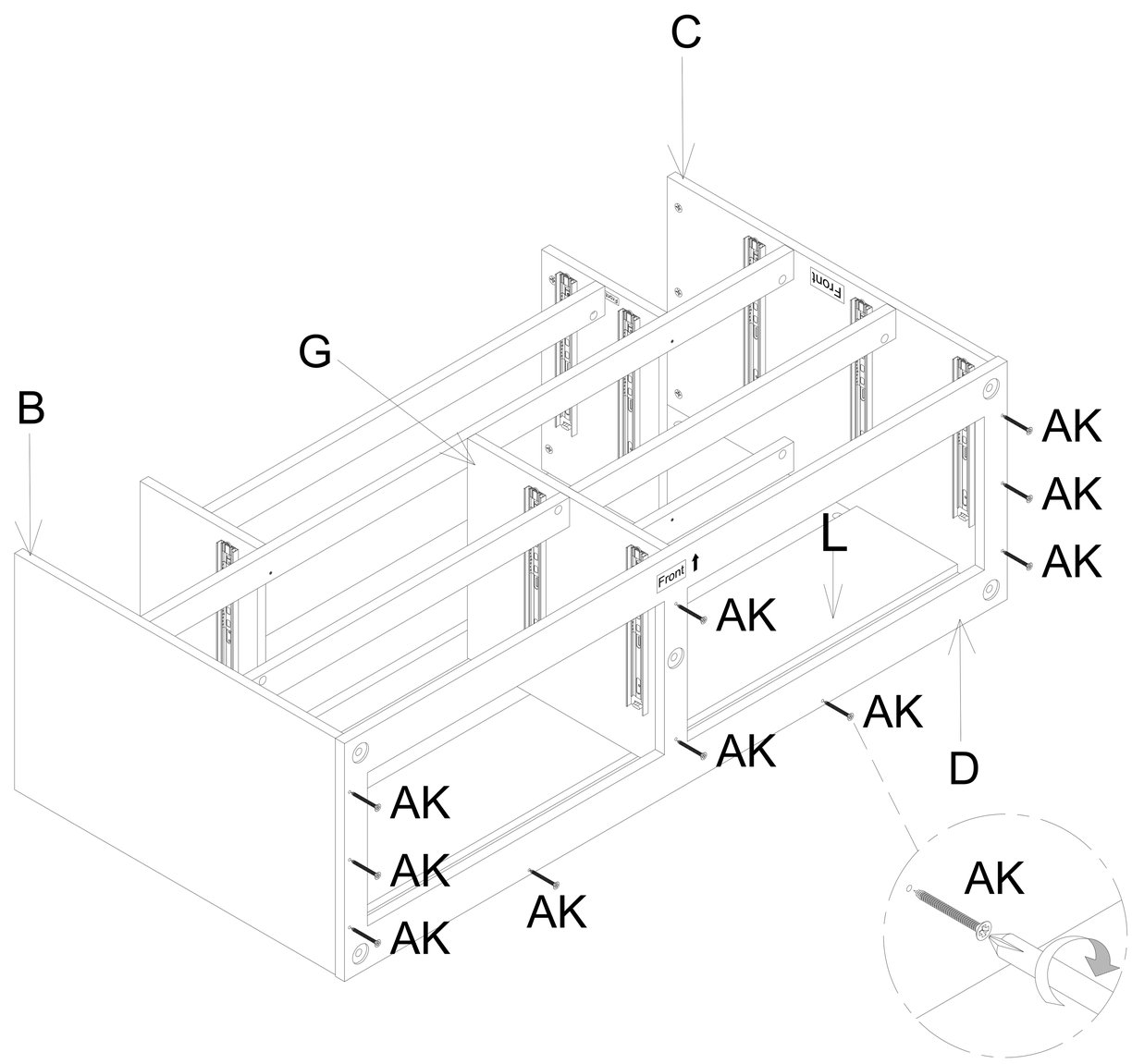

15 Attach the Post (M) to the Bottom Frame (D) by turning clockwise.

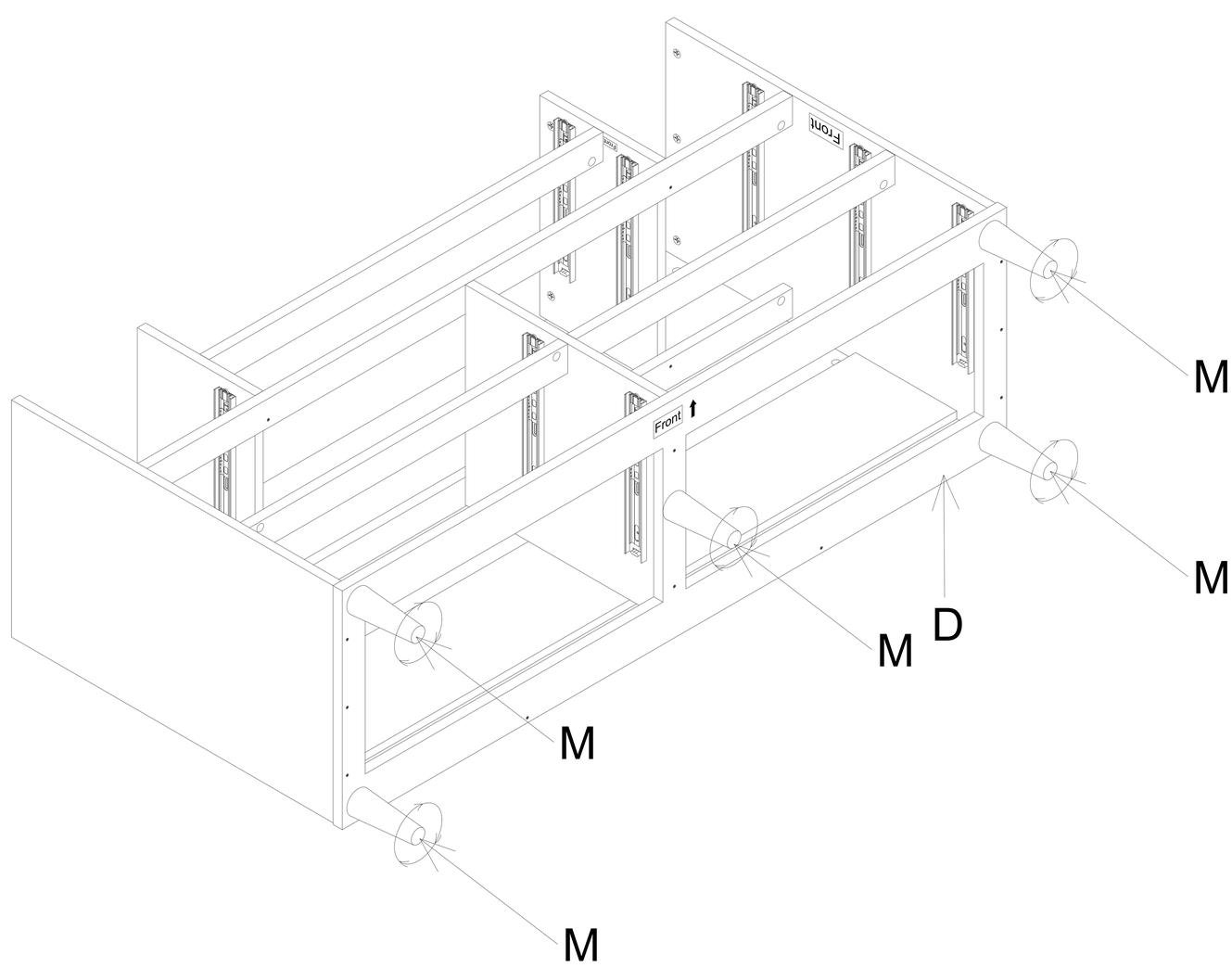

16 Stand the assembled unit upright. Attach the Top Panel (A) to the Left & Right Side Panel (B & C), the Left & Right Small Partition (E & F) and the Back Top Panel (K) and secure the Cam Lock (AH) with a screwdriver (not provided). Cover the Cam Lock (AH) with Cam Lock Cover (AI).

NOTE : - Do not over tighten the Cam Lock (AH).

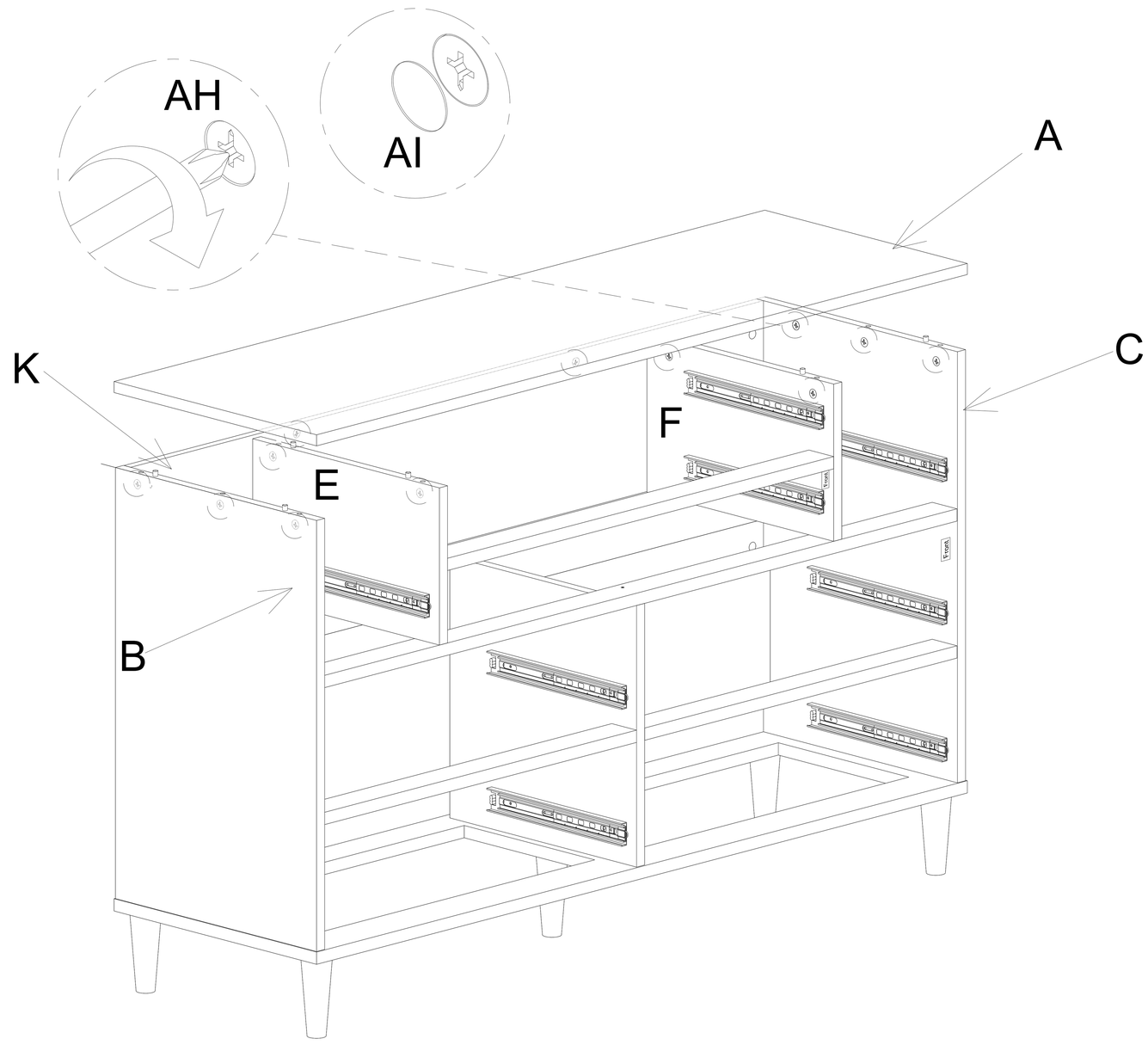

17 Attach Runner (AC) to the Left & Right Small Drawer Side (N & O) using Screw (AJ) with a screwdriver (not provided).

NOTE : - Do not over tighten the Screw (AJ).

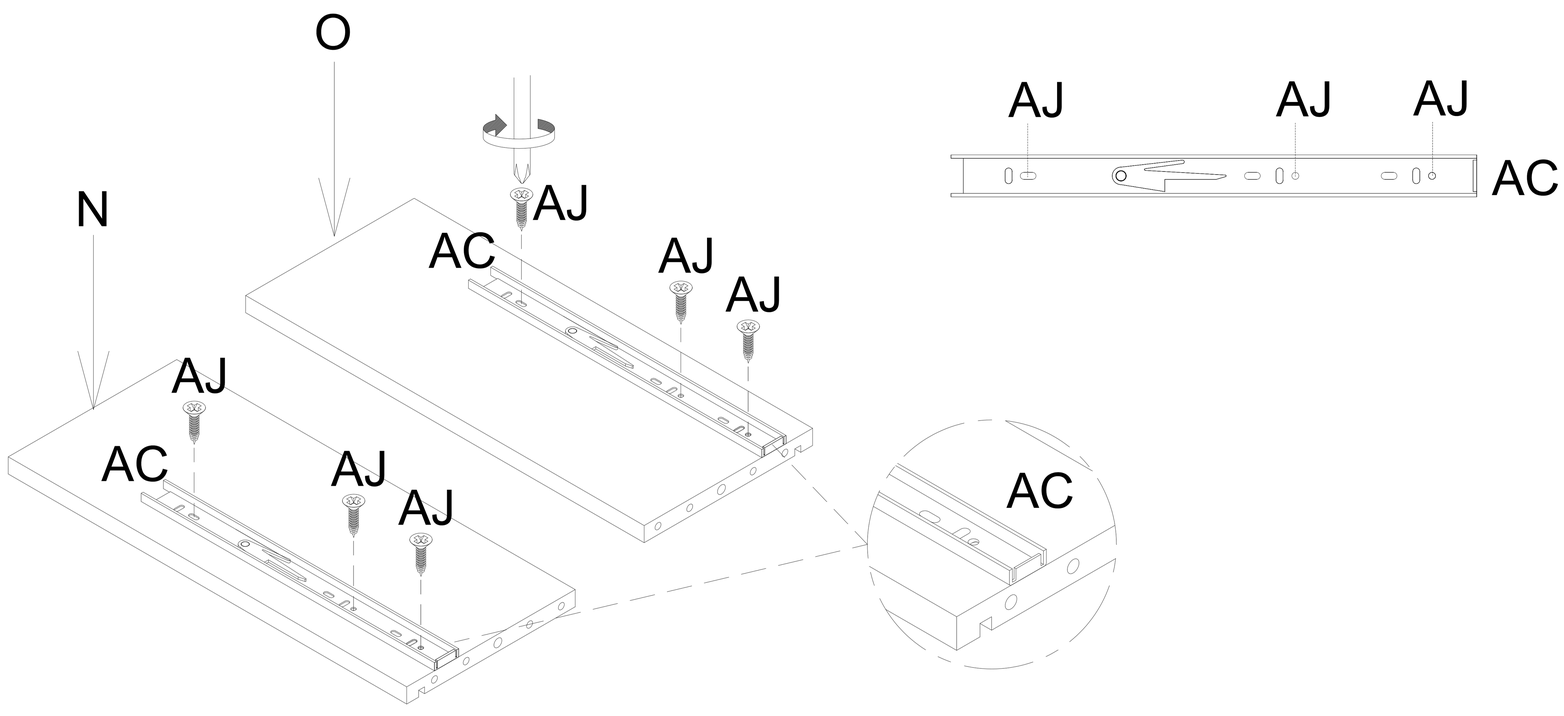

18 Attach Dowel (AE) and Cam Lock (AH) to the Left & Right Small Drawer Side (N & O) and the Small Drawer Back (Q). Attach Cam Bolt (AG) to the Left & Right Small Drawer Side (N & O) and the Small Drawer Front (P) with a screwdriver (not provided).

NOTE : - Ensure the arrows on each Cam Lock (AH) point towards the nearest edge with holes.

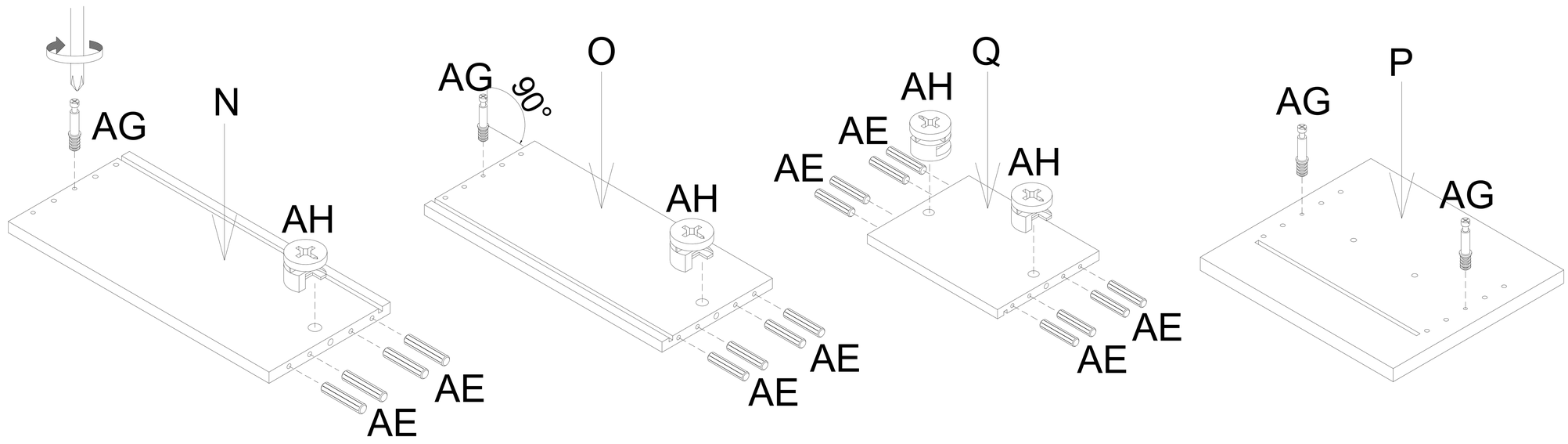

19 Attach the Left & Right Small Drawer Side (N & O) to the Small Drawer Back (Q) and secure the Cam Lock (AH) with a screwdriver (not provided). Cover the Cam Lock (AH) with Cam Lock Cover (AI).

NOTE : - Do not over tighten the Cam Lock (AH).

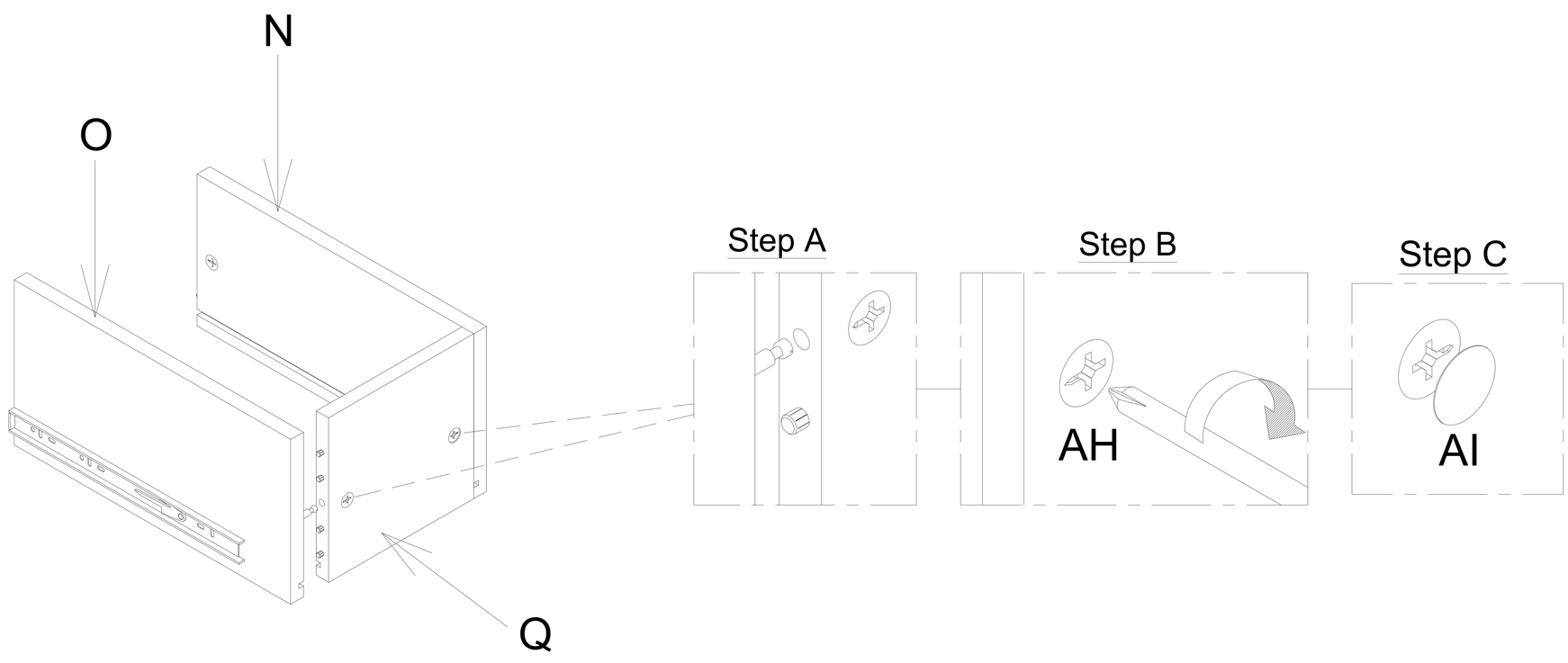

20 Slot the Small Drawer Base (R) into the grooves of the drawer box. Attach the Small Drawer Front (P) to the drawer box and secure the Cam Lock (AH) with a screwdriver (not provided). Cover the Cam Lock (AH) with Cam Lock Cover (AI).

NOTE : - Do not over tighten the Cam Lock (AH).

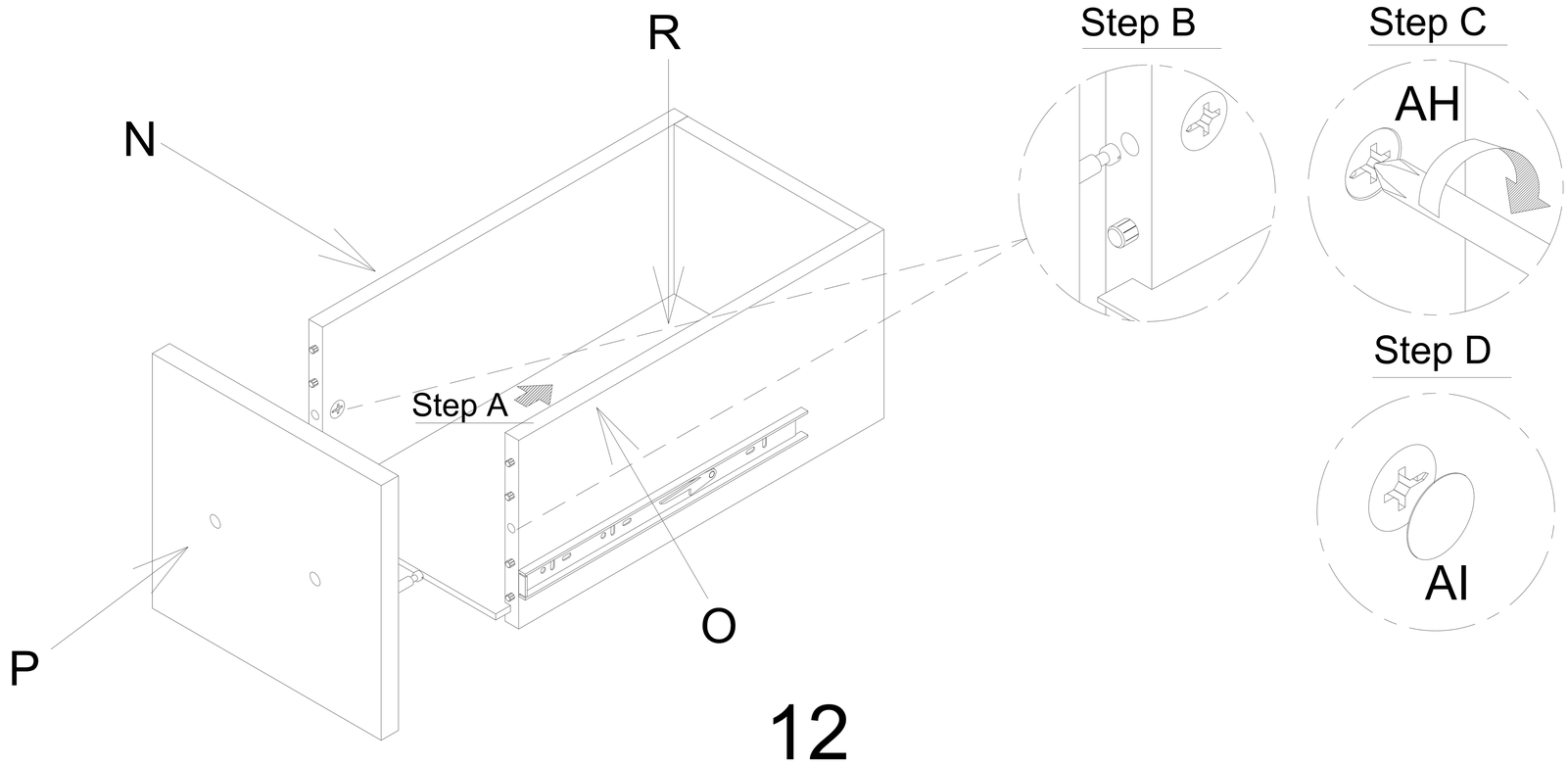

21 Attach the Handle (AD) to the Small Drawer Front (P) using Panhead Screw (AL) with a screwdriver (not provided).

NOTE : - Do not over tighten the Panhead Screw (AL).

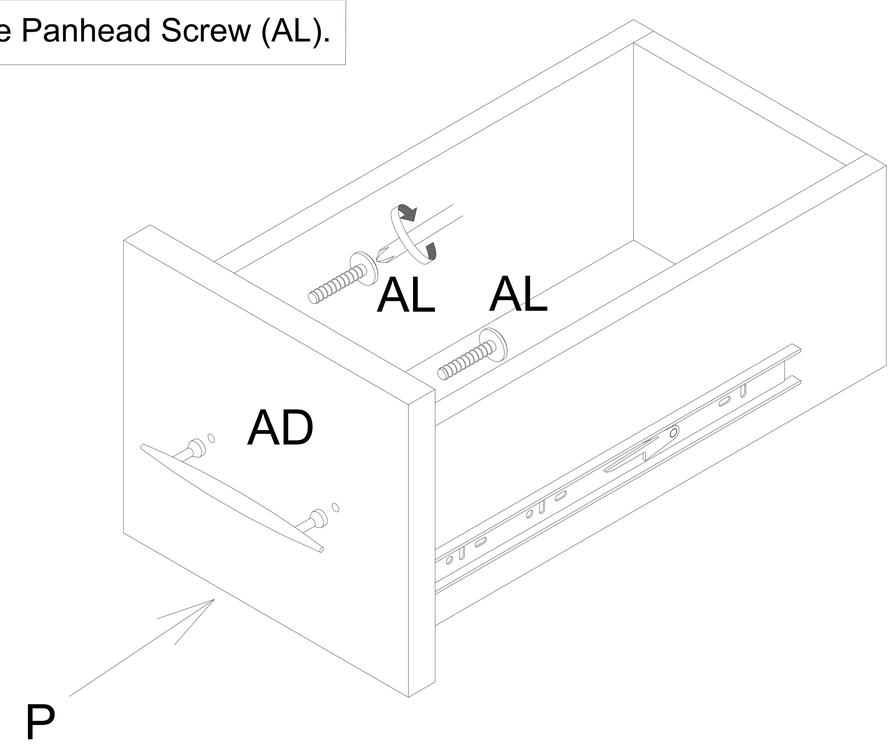

22 Attach Runner (AC) to the Left & Right Medium Drawer Side (S & T) using Screw (AJ) with a screwdriver (not provided).

NOTE : - Do not over tighten the Screw (AJ).

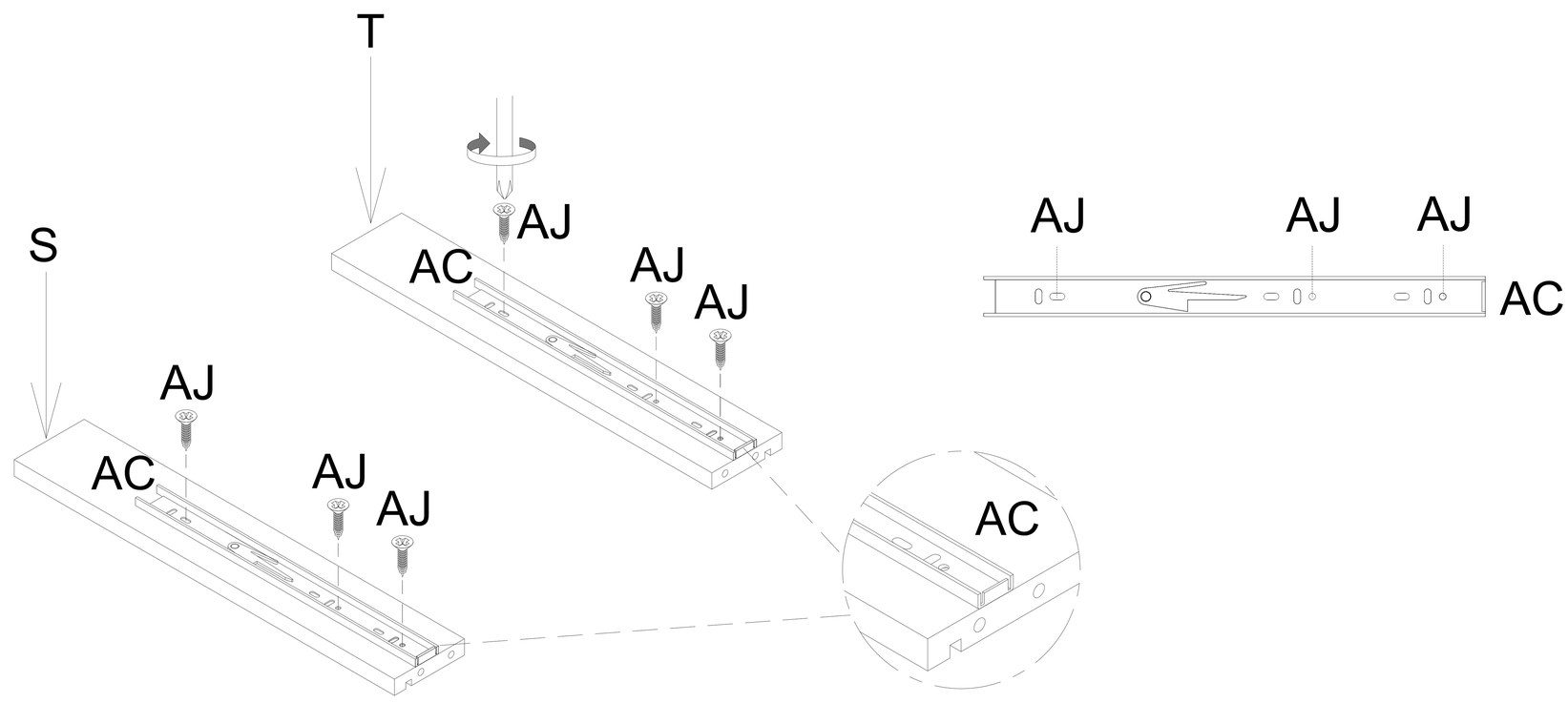

23 Attach Dowel (AE) and Cam Lock (AH) to the Left & Right Medium Drawer Side (S & T) and the Medium Drawer Back (V). Attach Cam Bolt (AG) to the Left & Right Medium Drawer Side (S & T) and the Medium Drawer Front (U) with a screwdriver (not provided).

NOTE : - Ensure the arrows on each Cam Lock (AH) point towards the nearest edge with holes.

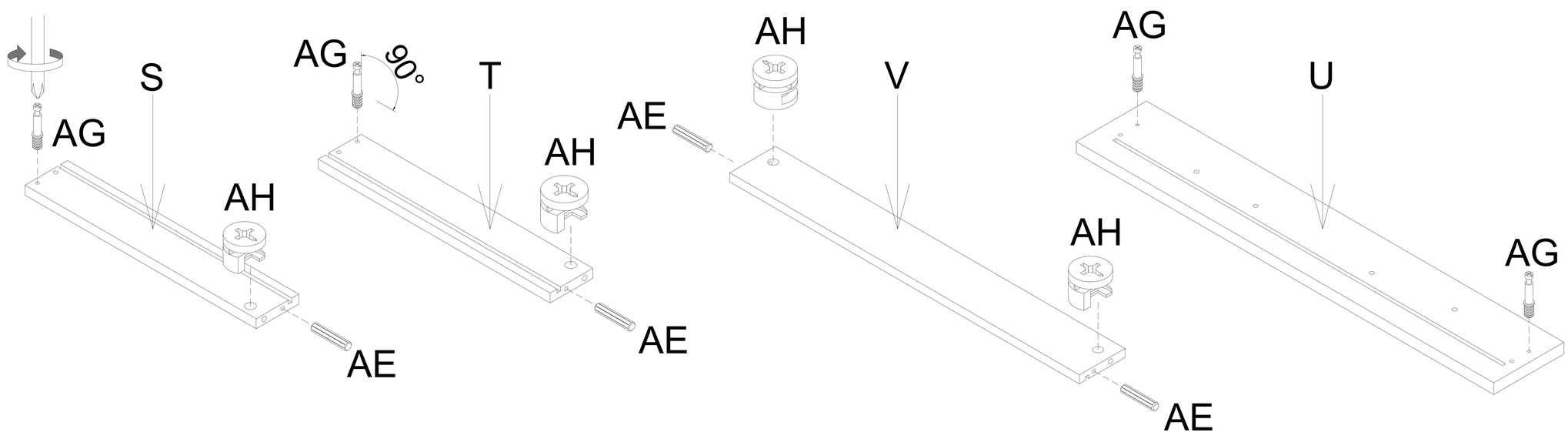

24 Attach the Left & Right Medium Drawer Side (S & T) to the Medium Drawer Back (V) and secure the Cam Lock (AH) with a screwdriver (not provided). Cover the Cam Lock (AH) with Cam Lock Cover (AI).

NOTE : - Do not over tighten the Cam Lock (AH).

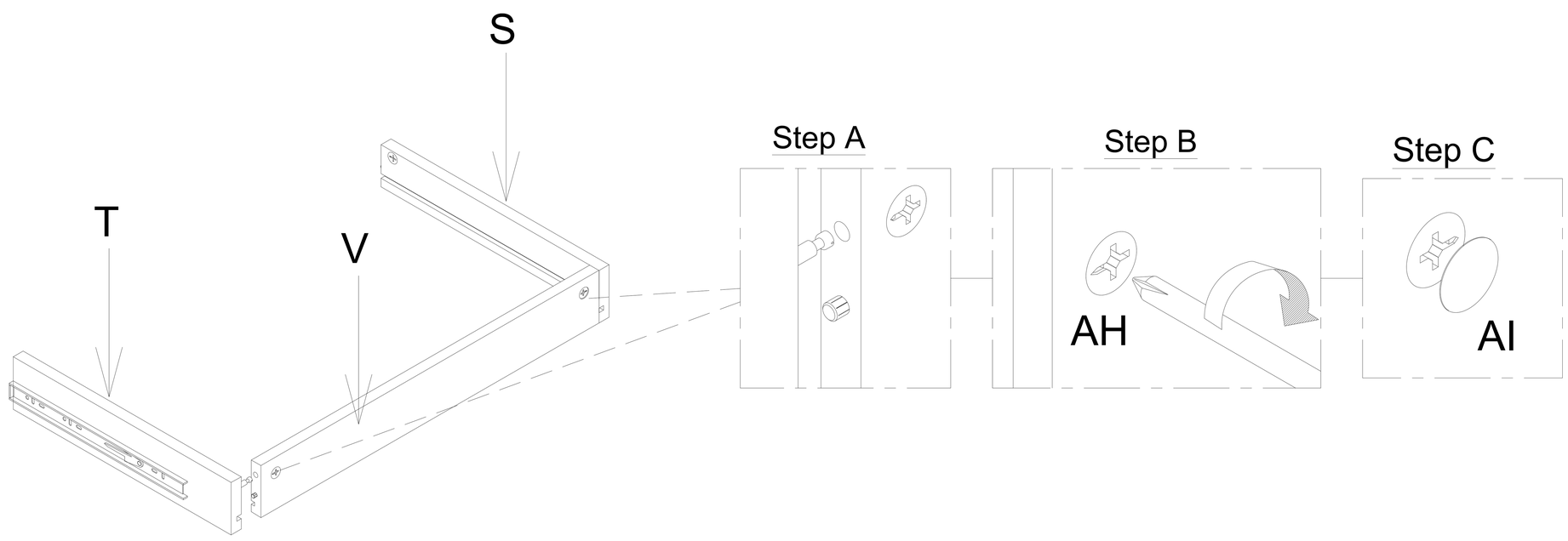

25 Slot the Medium Drawer Base (W) into the grooves of the drawer box. Attach the Medium Drawer Front (U) to the drawer box and secure the Cam Lock (AH) with a screwdriver (not provided). Cover the Cam Lock (AH) with Cam Lock Cover (AI).

NOTE : - Do not over tighten the Cam Lock (AH).

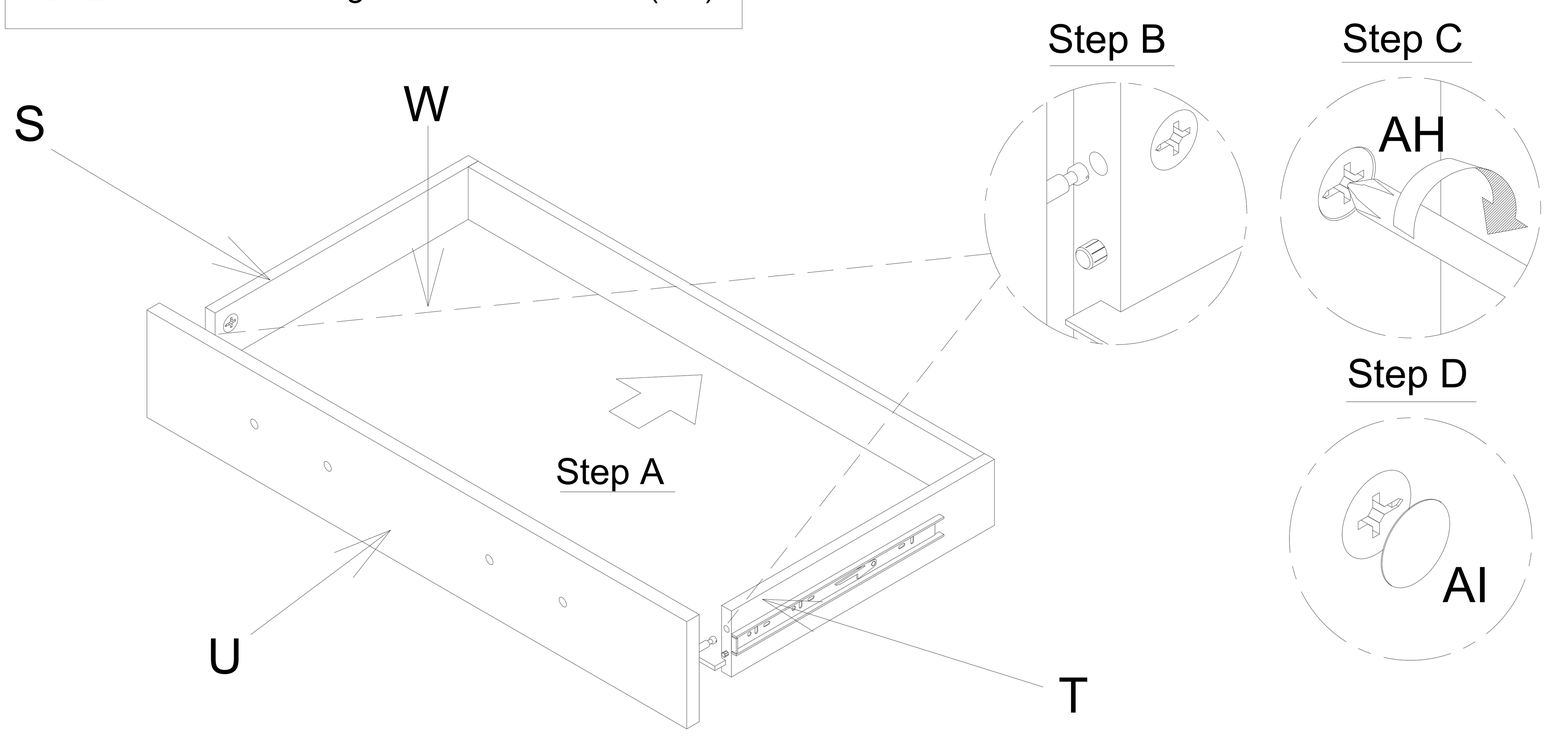

26 Attach the Handle (AD) to the Medium Drawer Front (U) using Panhead Screw (AL) with a screwdriver (not provided).

NOTE : - Do not over tighten the Panhead Screw (AL).

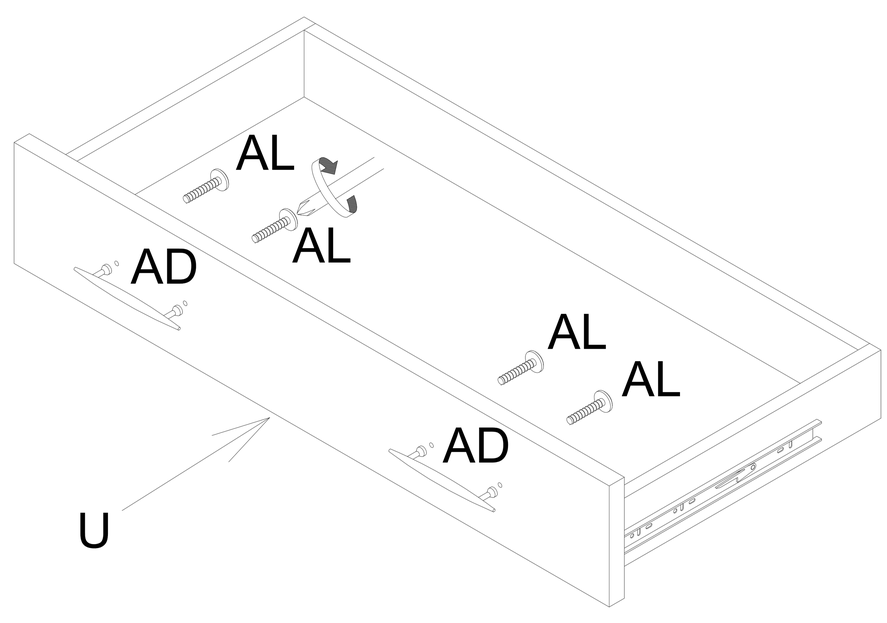

27 Attach Runner (AC) to the Left & Right Big Drawer Side (X & Y) using Screw (AJ) with a screwdriver (not provided).

NOTE : - Do not over tighten the Screw (AJ).

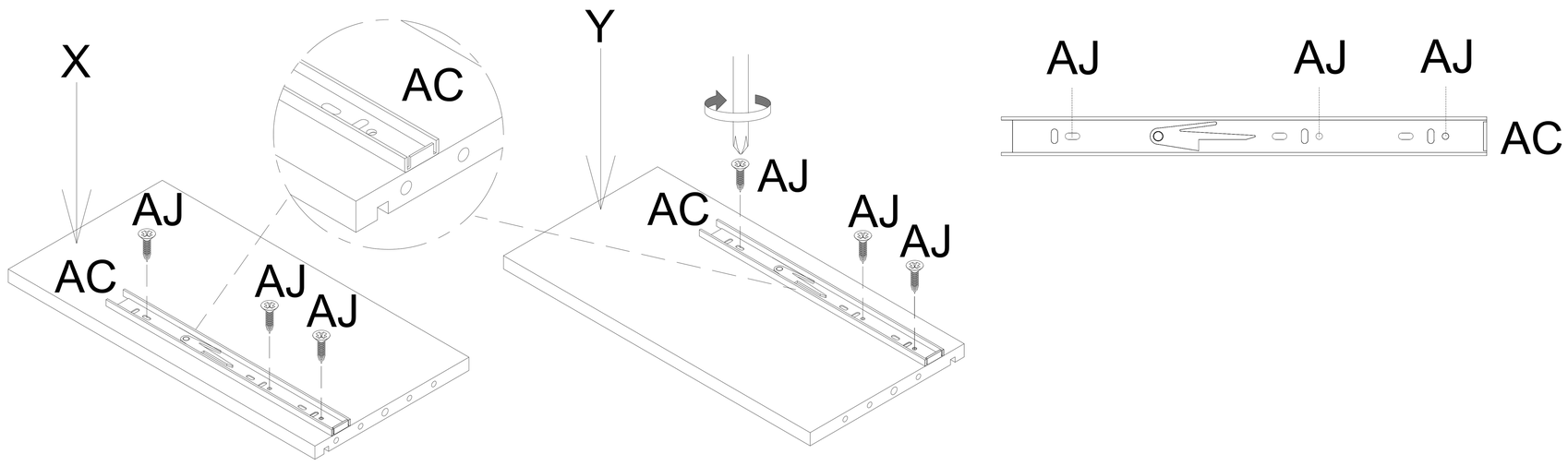

28 Attach Dowel (AE) and Cam Lock (AH) to the Left & Right Big Drawer Side (X & Y) and the Big Drawer Back (AA). Attach Cam Bolt (AG) to the Left & Right Big Drawer Side (X & Y) and the Big Drawer Front (Z) with a screwdriver (not provided).

NOTE : - Ensure the arrows on each Cam Lock (AH) point towards the nearest edge with holes.

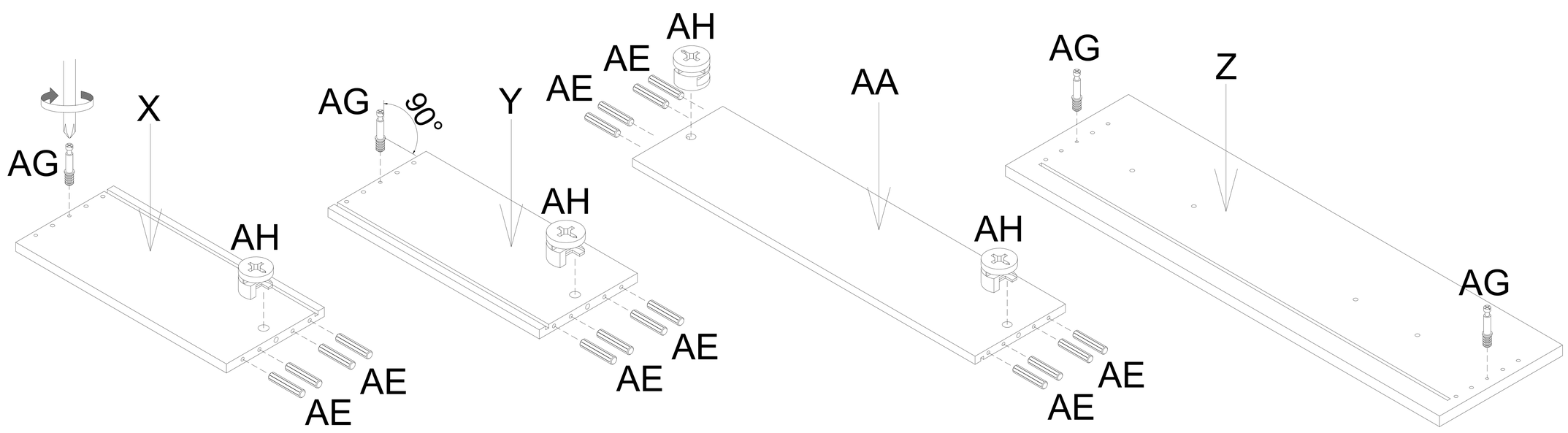

29 Attach the Left & Right Big Drawer Side (X & Y) to the Big Drawer Back (AA) and secure the Cam Lock (AH) with a screwdriver (not provided). Cover the Cam Lock (AH) with Cam Lock Cover (AI).

NOTE : - Do not over tighten the Cam Lock (AH).

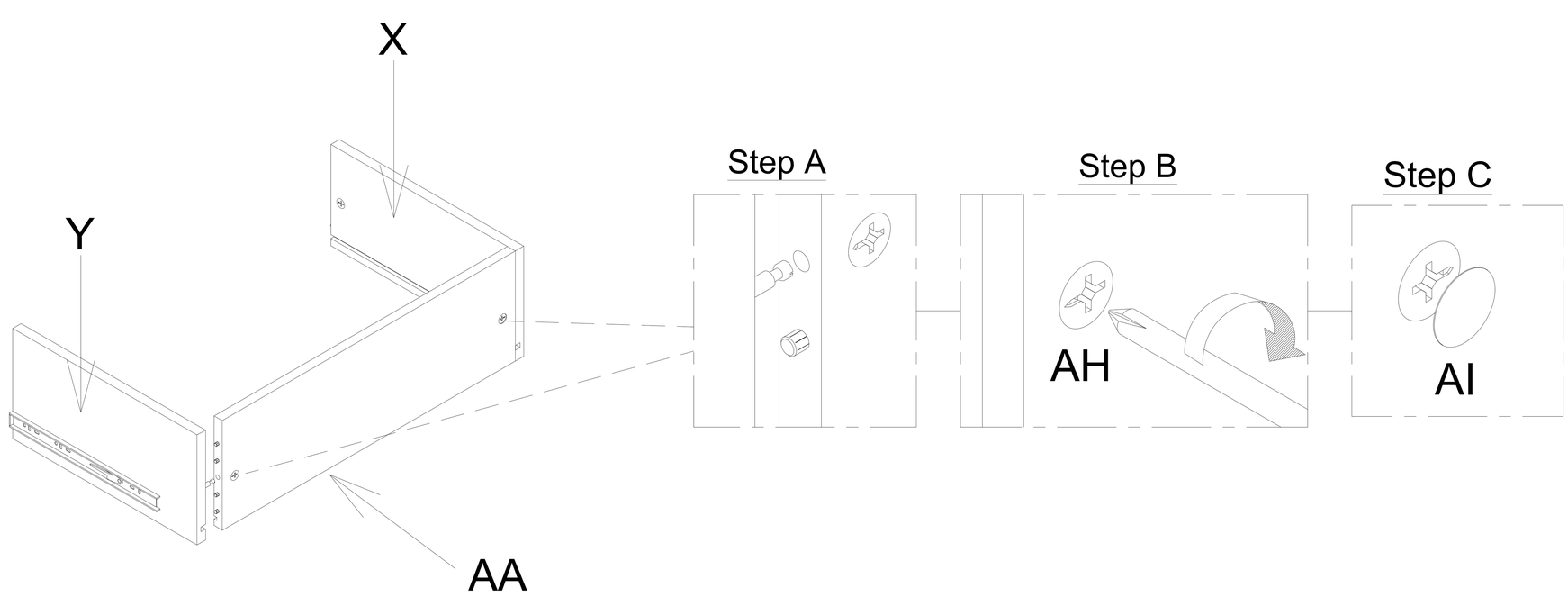

30 Slot the Big Drawer Base (AB) into the grooves of the drawer box. Attach the Big Drawer Front (Z) to the drawer box and secure the Cam Lock (AH) with a screwdriver (not provided). Cover the Cam Lock (AH) with Cam Lock Cover (AI).

NOTE : - Do not over tighten the Cam Lock (AH).

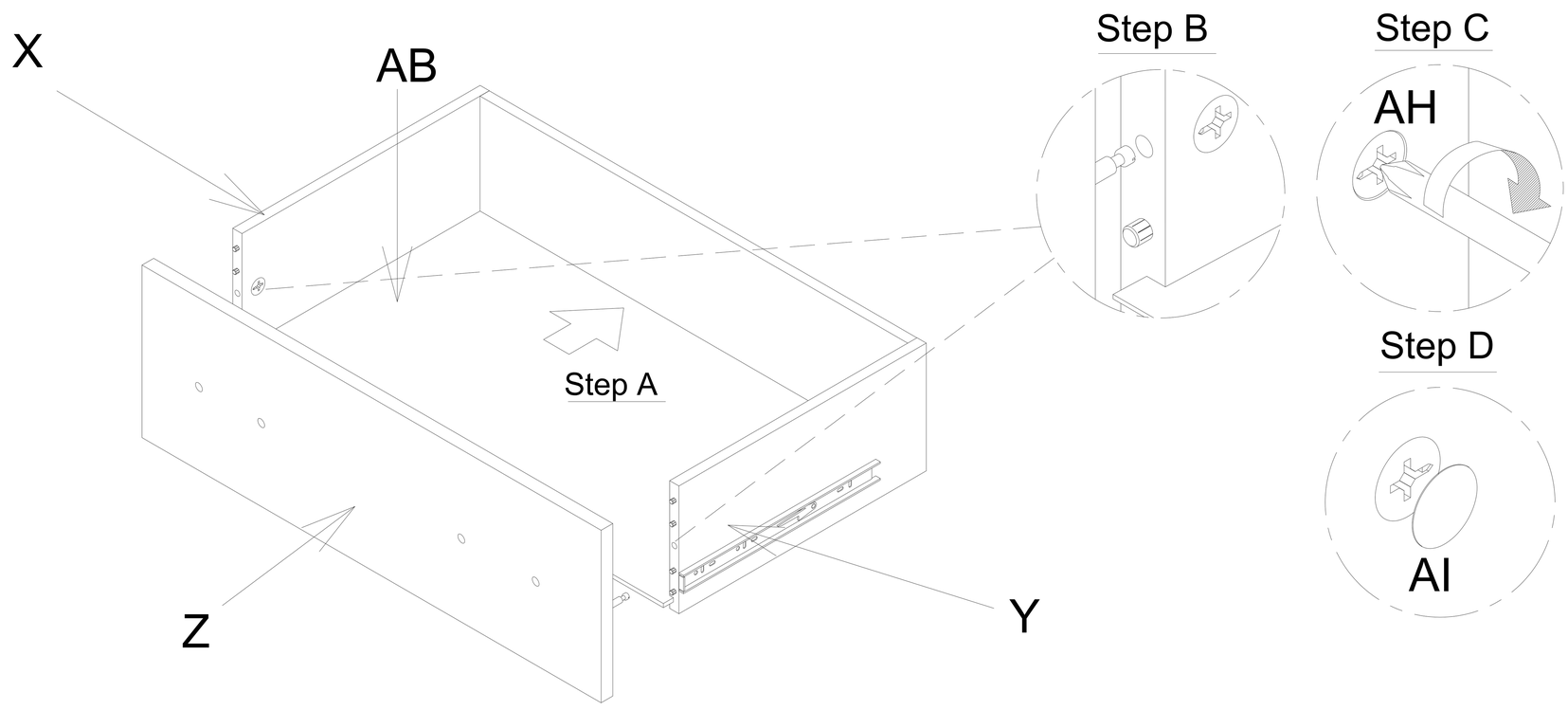

31 Attach the Handle (AD) to the Big Drawer Front (Z) using Panhead Screw (AL) with a screwdriver (not provided).

NOTE : - Do not over tighten the Panhead Screw (AL).

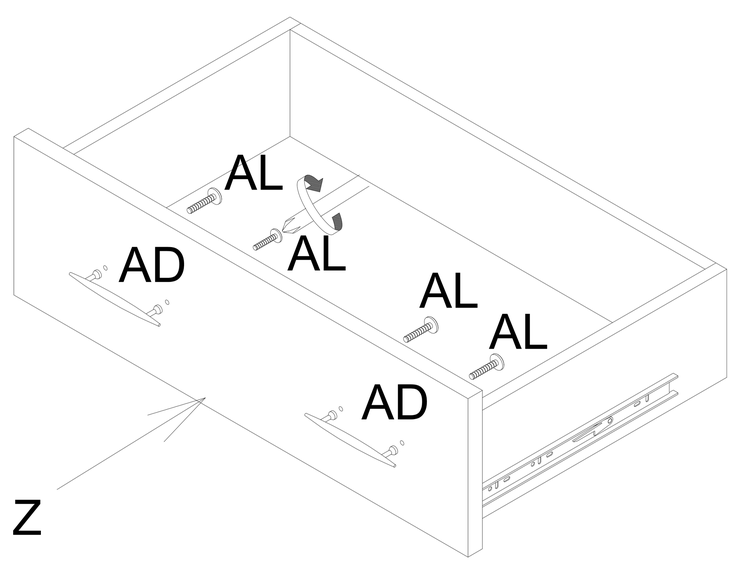

32 Pull out the metal chrome plates from both sides of the Runner (AC). Align the metal chrome plates with the slides on one drawer side, then repeat on the other side. If they are not aligned properly, remove and try again. Once both tracks are aligned properly, slowly push the drawer all the way in.

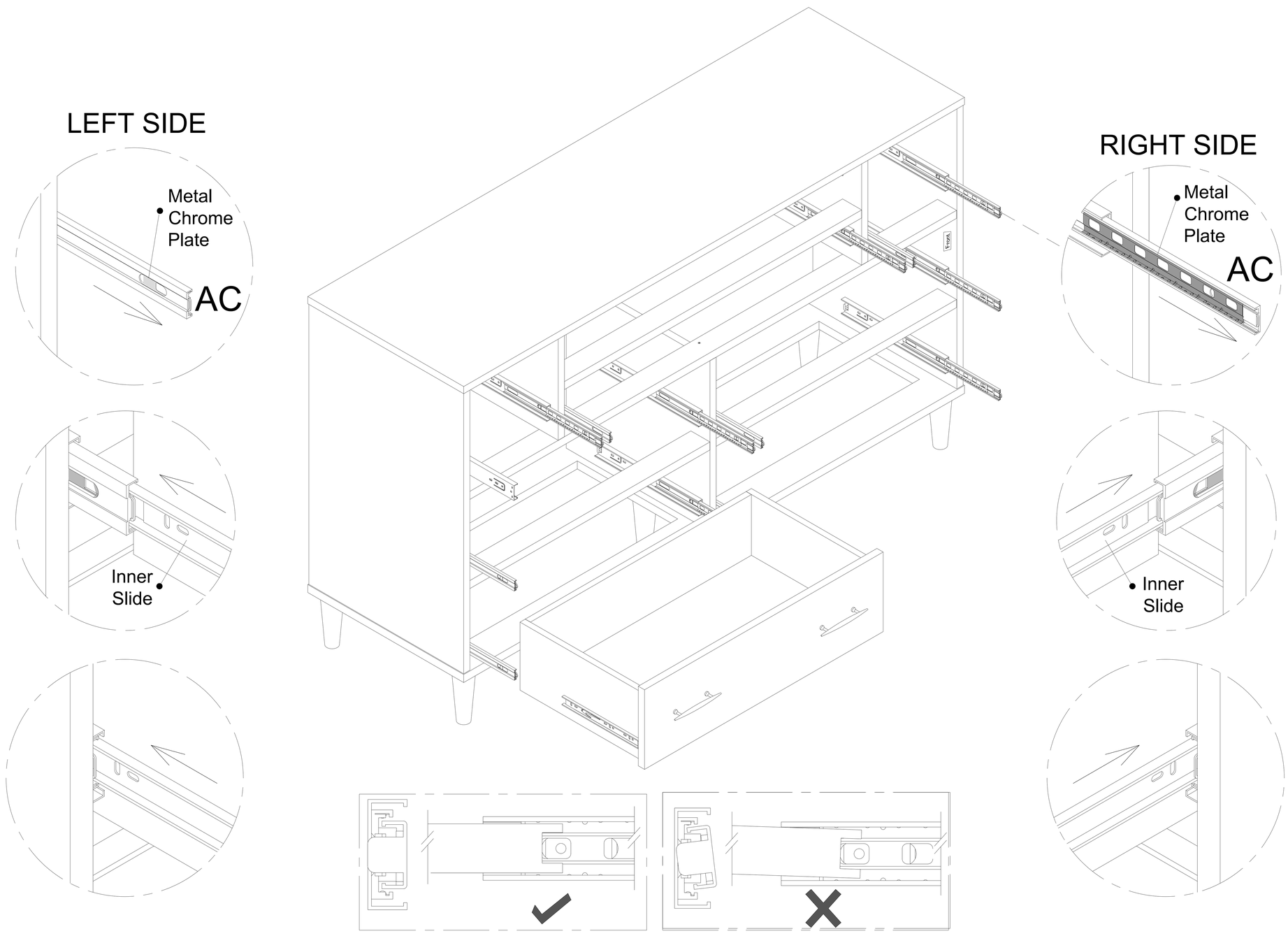

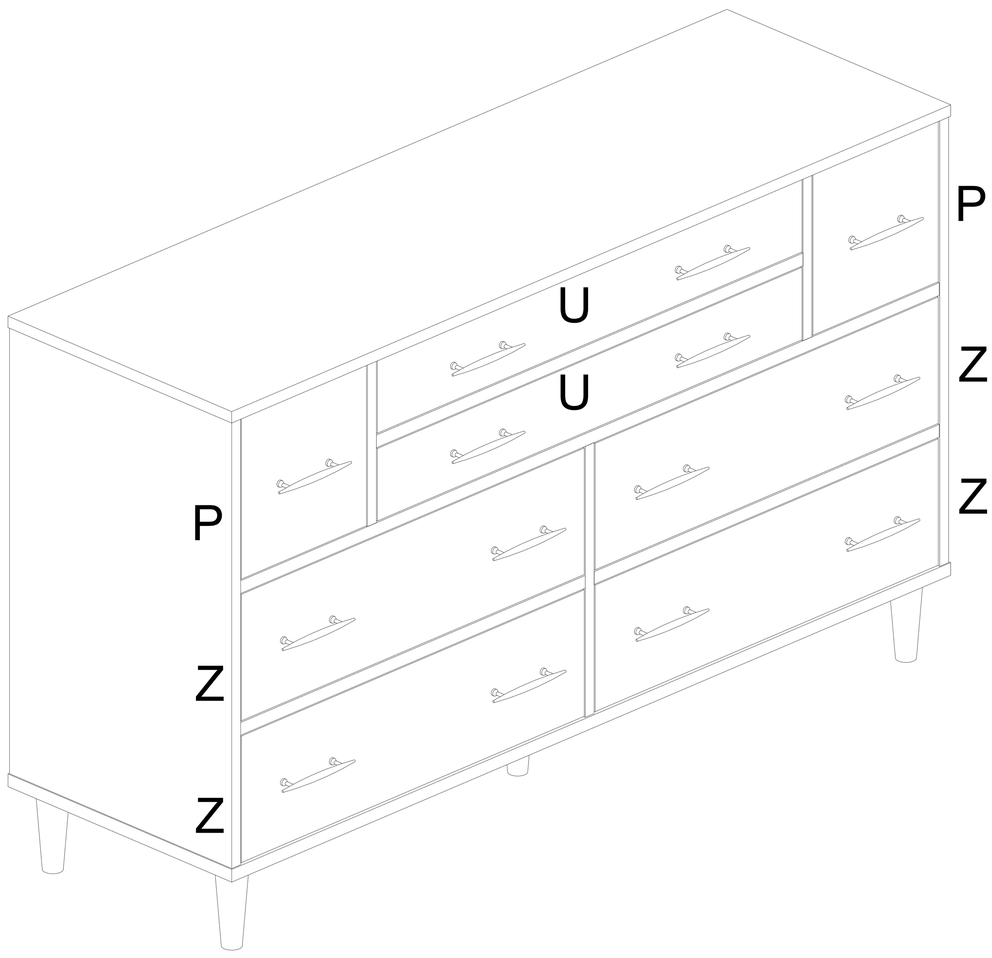

33 Attach the Anti-Tip Kit (AM) to the wall. Mount the bracket vertically to wall using the long screw. Then, secure the bracket vertically to the furniture back below the top using the short screw. Place the bracket as close to the center of the furniture back as possible, considering the wall stud and desired position in the room. Move furniture to its final position. Thread the bracket and pull it tight.

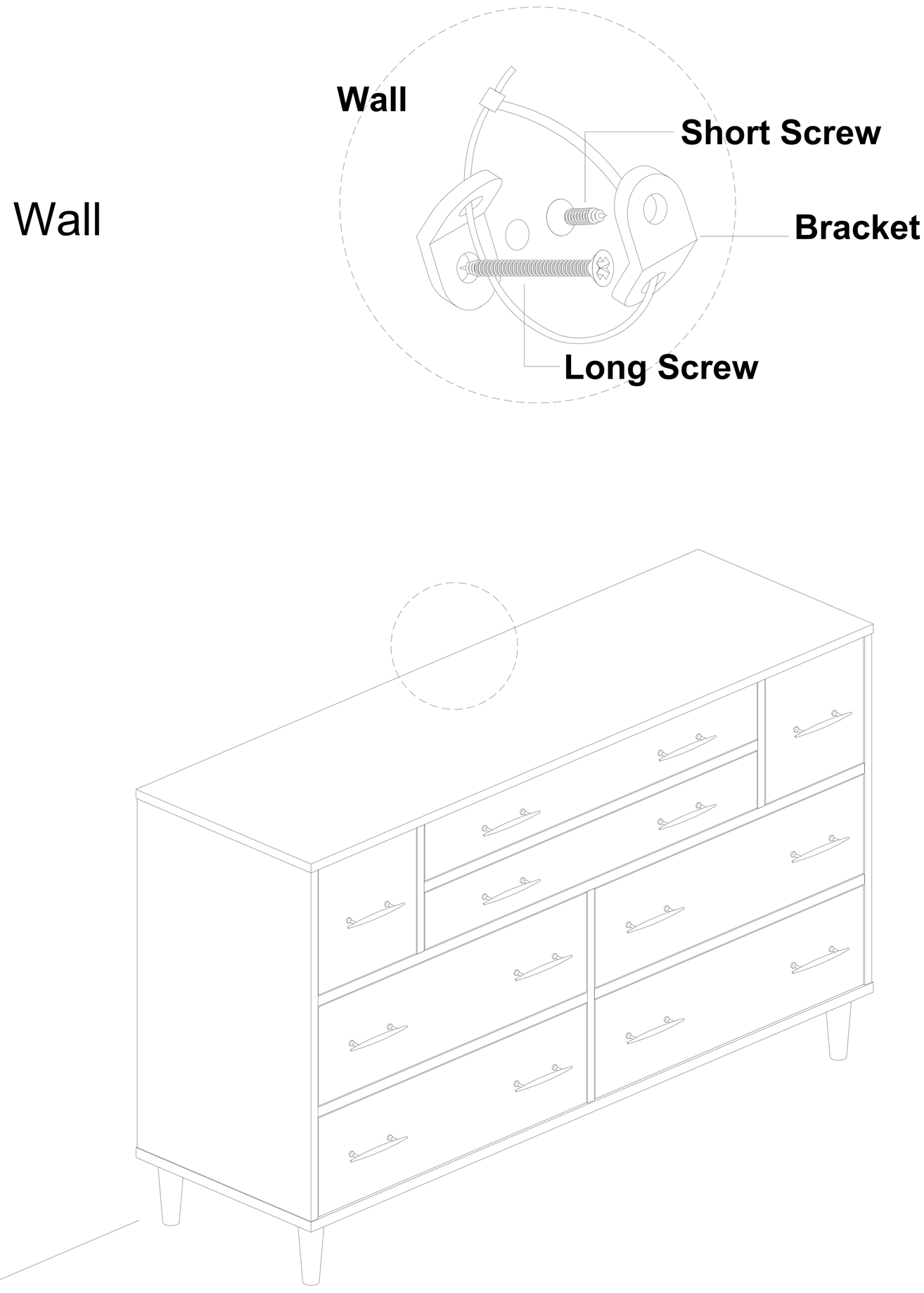

Cleaning & Care
Treat surfaces with care. Surfaces are resistant to scratches but are not scratch resistant. Clean surfaces with a dry or damp soft cloth. Do not use abrasive cleaners. Hardware may loosen over time. Periodically check that all connections are tight.