bestchoiceproducts

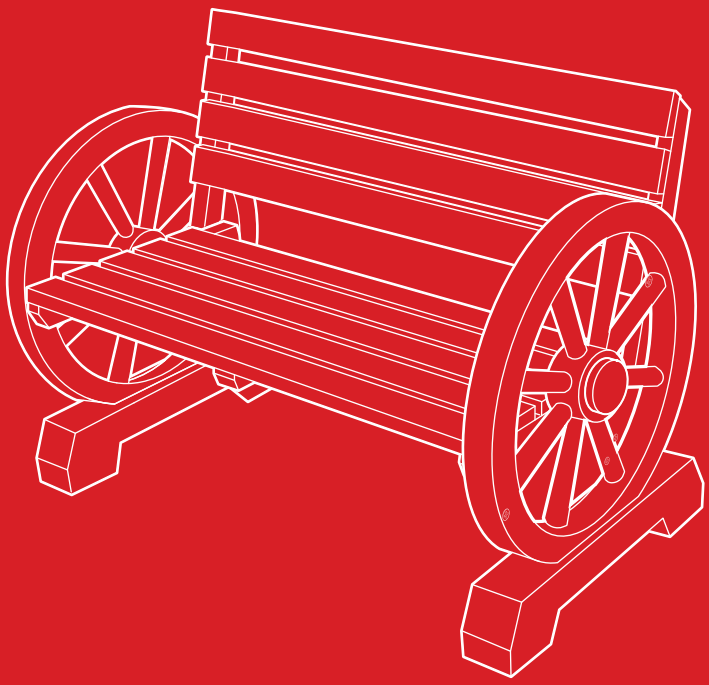

INSTRUCTION MANUAL

Wooden Wagon Wheel Bench

Ver. 4

SKY2364

bestchoiceproducts

As shoppers, we're always trying to find the perfect balance between quality & value. At BCP, we believe we've achieved that. Our diverse catalog of everyday essentials is tailored especially to our customers & guaranteed to hit that sweet spot of high quality & low price.

Always.

NOTICE

- Please do not exceed the weight limitations of this item.
- Do not stand on or use any part of this item as a step ladder.
- Firmly secure all bolts, screws, and knobs before use.
- Reconfirm that all bolts, screws, and knobs are secure every 90 days.
- Fasten screws loosely during assembly. Do not firmly tighten screws until item is fully assembled.
- Be aware that some parts are heavy and have sharp edges.
- If any parts are missing, broken, damaged, or worn, stop using this product until repairs are made and/or factory replacement parts are installed.
- Do not use this item in a way inconsistent with the manufacturer's instructions as this could void the product warranty.

TOOLS REQUIRED

PHILLIPS SCREWDRIVER

SMALL WRENCH

350 LBS CAPACITY

1 PERSON ASSEMBLY

APPROXIMATELY 20 MIN. ASSEMBLY

HARDWARE

1 M8 X 70MM BOLT SET

2 PCS

2 M8 X 80MM BOLT SET

2 PCS

3 M8 X 110MM BOLT SET

4 PCS

4 M3.5 X 35MM SCREW

4 PCS

PARTS

A BACKREST

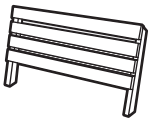

1 PC

B SEAT

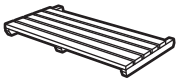

1 PC

C SIDE

2 PCS

D CAP

2 PCS

PRODUCT ASSEMBLY

1 Attach the part A backrest to part B seat with two part 1 bolt sets.

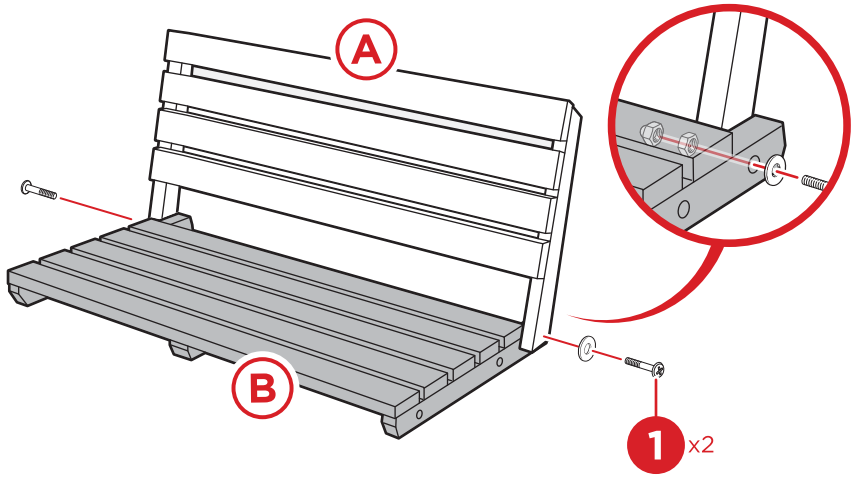

2 Attach two part C sides with two part 2 bolt sets and four part 3 bolt sets.

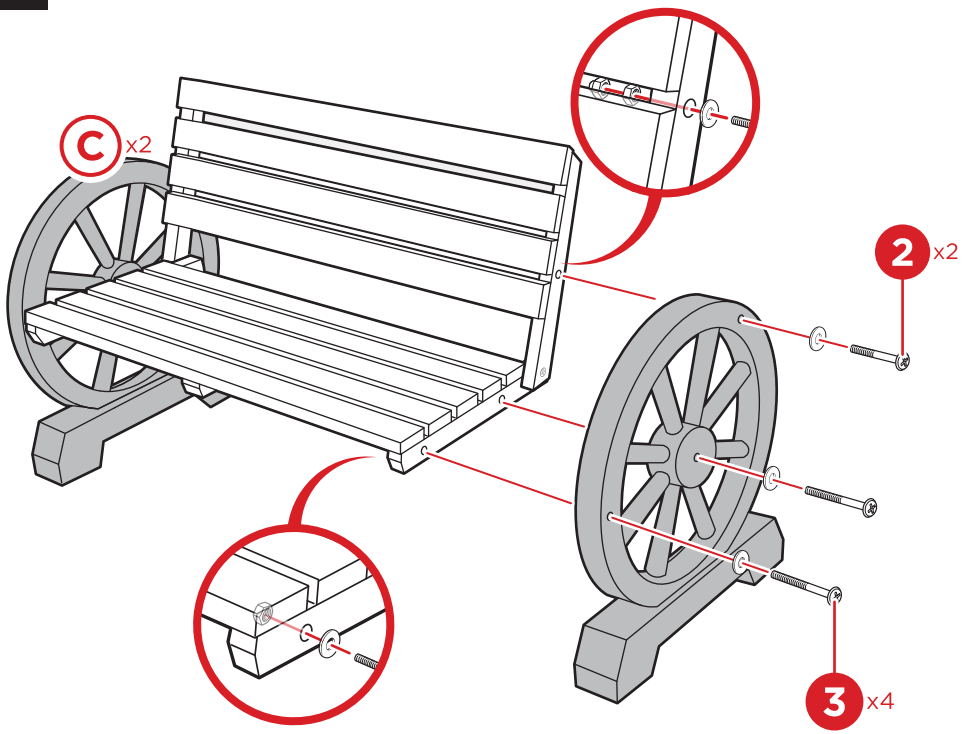

3 Attach two part D caps with four part 4 screws.

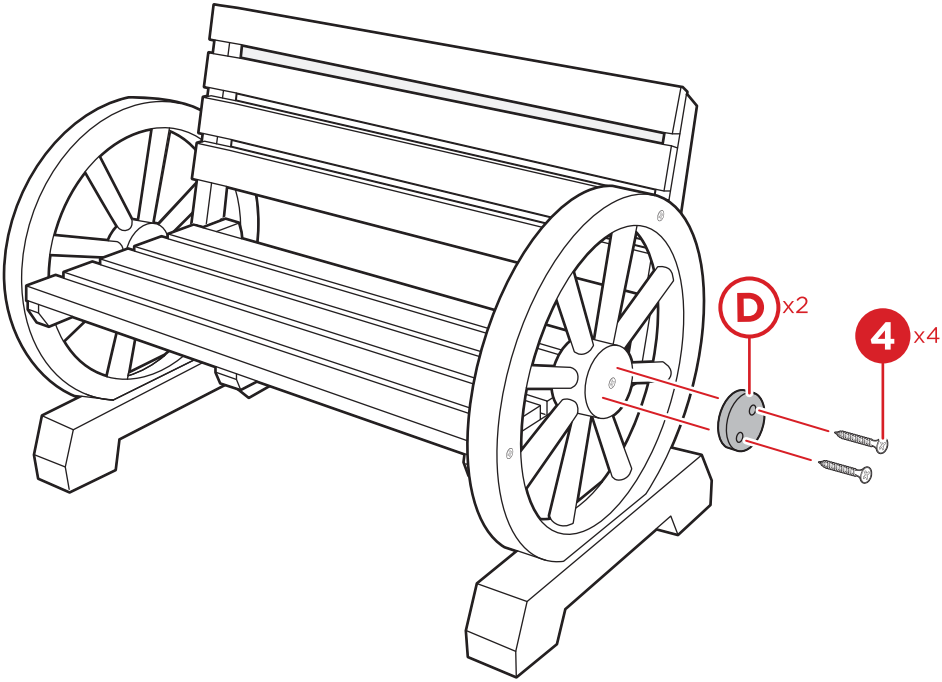

bcp

bestchoiceproducts

Check out more great products:
bestchoiceproducts.com

Earn points while you shop. Join today!

bestchoiceproducts rewards

Join | Earn | Redeem

Give your friends 15% off their first order! For each successful referral you'll receive 100 points.

bestchoiceproducts.com

HELP CENTER

Question about your product? We're here to help. Visit us at:

help.bestchoiceproducts.com

CHAT US!

Product Assembly

Returns & Refunds

PRODUCT WARRANTY INFORMATION

All items can be returned for any reason within 60 days of the receipt and will receive a full refund as long as the item is returned in its original product packaging and all accessories from its original shipment are included. All returned items will receive a full refund back to the original payment method. All returned items will not be charged a re-stocking fee.

All returned items require an RA (Return Authorization) number, which can only be provided by a Best Choice Products Customer Service Representative when the return request is submitted. Items received without an RA may not be accepted or may increase your return processing time. Once an item has been received by Best Choice Products, refunds or replacements will be processed within 5 business days.

All returns must be shipped back to the Best Choice Products Return Center at the customer's expense. If the reason for return is a result of an error by Best Choice Products then Best Choice Products will provide a pre-paid shipping label via email. Boxes for return shipping will not be provided by Best Choice Products, and is the customer's responsibility to either use the original shipping boxes or purchase new boxes.

Pictures may be required for some returns to ensure an item is not damaged prior to its return. Items returned are not considered undamaged until they are received by Best Choice Products and verified as such. All damages to items are the customer's responsibility until the item has been received by and acknowledge by Best Choice Products as undamaged.

⚠ WARNING

Manufacturer and seller expressly disclaim any and all liability for personal injury, property damage or loss, whether direct, indirect, or incidental, resulting from the incorrect attachment, improper use, inadequate maintenance, or neglect of this product.