FLEXSTEEL®

Armless Power Recliner with Power Headrest & Lumbar

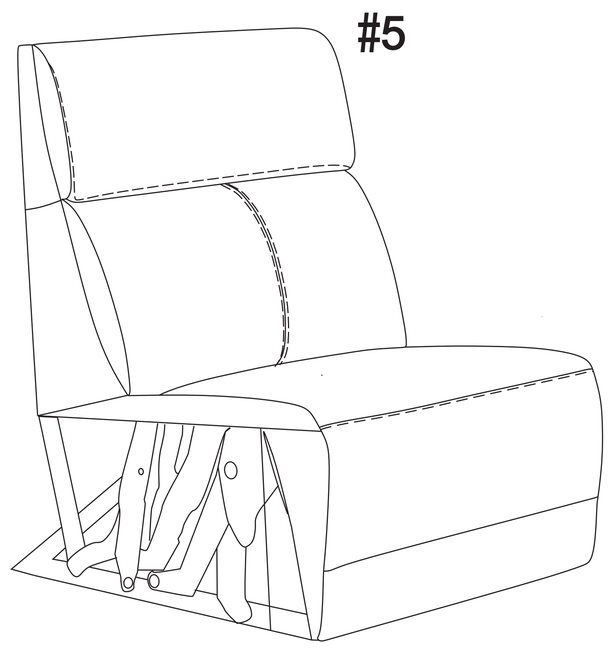

IMPORTANT NOTE

Read these instructions carefully and familiarize yourself with each procedure before assembling the furniture. Check that you have all the component parts and familiarize yourself with each part before proceeding.

Take all the fittings out of the plastic bag and separate them into groups. Ensure you have enough space to lay out all the parts before assembly. To prevent damage to the parts, we recommend that you assemble the unit on a soft, level surface.

Part List

A. Back
1 piece

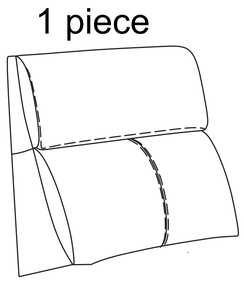

B. Seat
1 piece

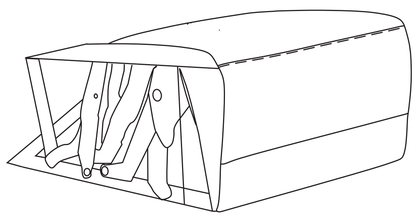

C. Transformer
1 piece

D. AC Power Cable
1 piece

Assembly Instructions

STEP 1

Detach the Transformer (C) and the AC Power Cable (D) from the bottom of the Seat (B). (See Figure 1.)

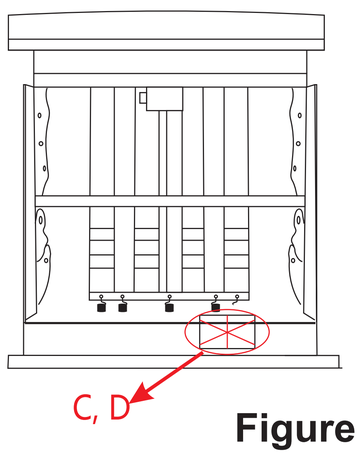

Figure 1

STEP 2

Lay the Back (A) face down on the Seat (B).
Zip the fabric on the bottom of the Back (A) with the back of the Seat (B). (See Figure 2.)

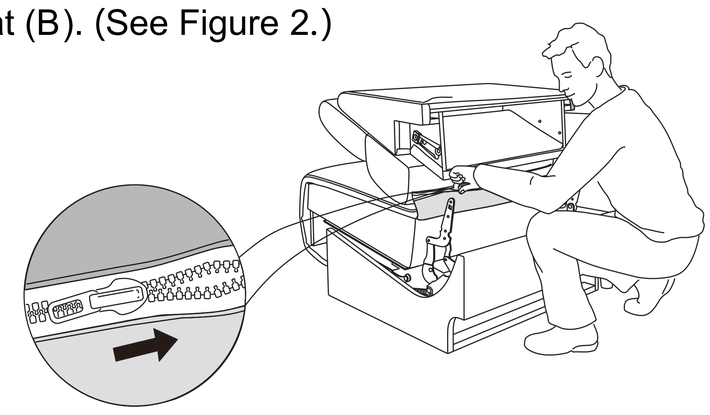

Figure 2

STEP 3

Connect Headrest and Lumbar cables between the Back (A) and the Seat (B). (See Figure 3.)

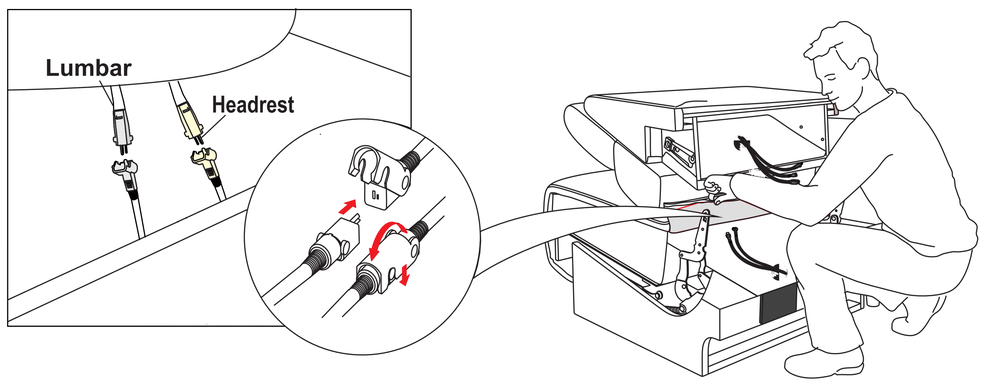

Figure 3

STEP 4

Begin sectional connection by placing the piece #1 in desired location in the room. Then start sectional connection by placing #2 into piece #1.
Continue sectional connection with piece #3 thru #7 following the same method described above. (See Figure 4.)

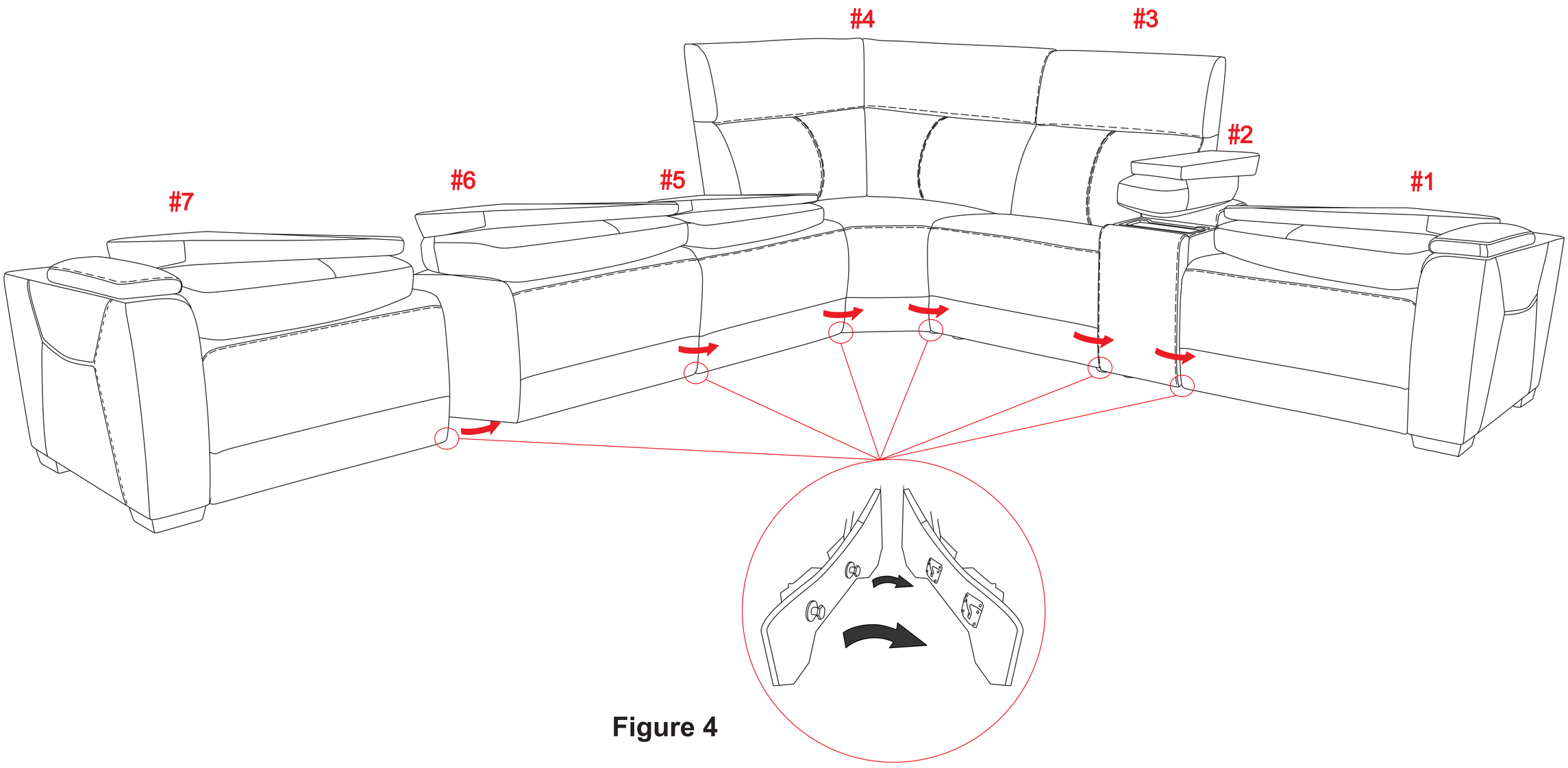

Figure 4

FLEXSTEEL® PULSE™

STEP 5

Connect the Transducer-L, Speaker, SYNC and Audio Controller cables between piece #1 and #2, between piece #6 and #7. Connect the Transducer-R between piece #5 and #6. (See Figure 5.)

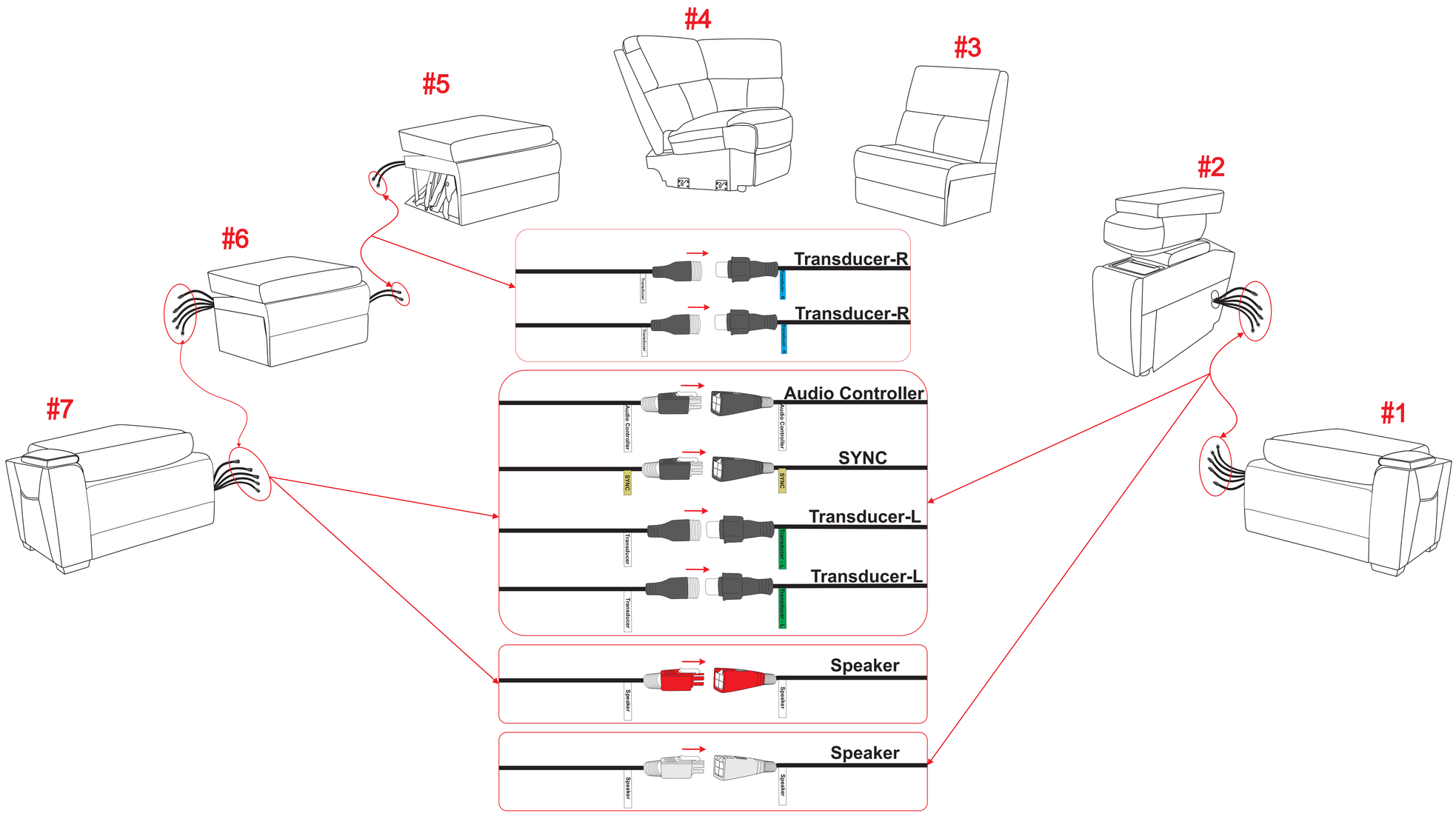

Figure 5

STEP 6

After connecting all cables between the sectional pieces, neatly secure the cables behind each seat using the provided Velcro straps. (See Figure 6.)

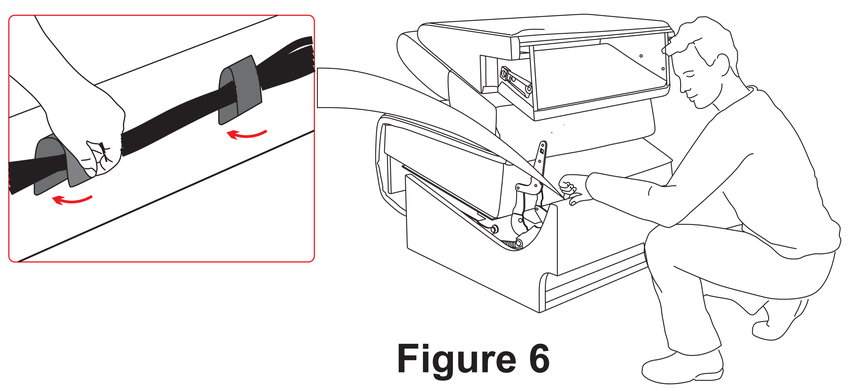

Figure 6

STEP 7

Attach the Back to the Seat for pieces #1, #2, #5, #6 and #7. Ensure the latches fit well. (See Figure 7.)

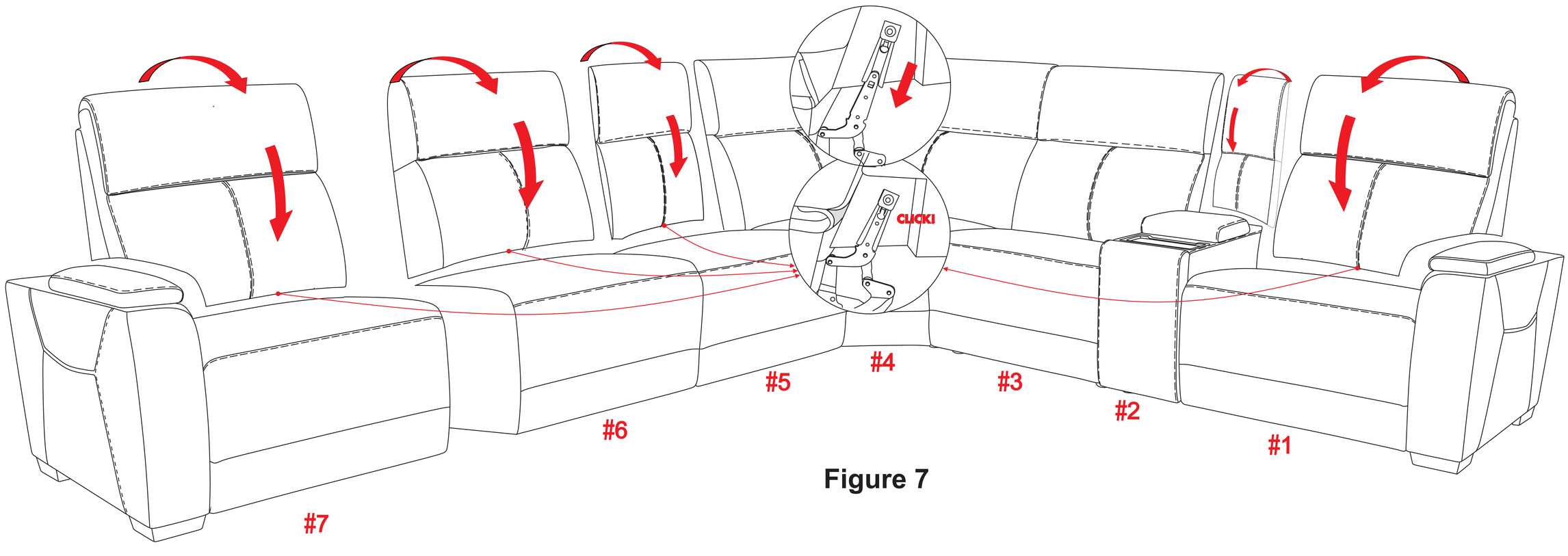

Figure 7

STEP 8

Connect the power cables on the back of the seats of pieces #1, #2, #5, #6 and #7 each to a Transformer.
Connect an AC Power Cable to each Transformer, and plug the AC Power Cables into nearby outlets. (See Figure 8.)

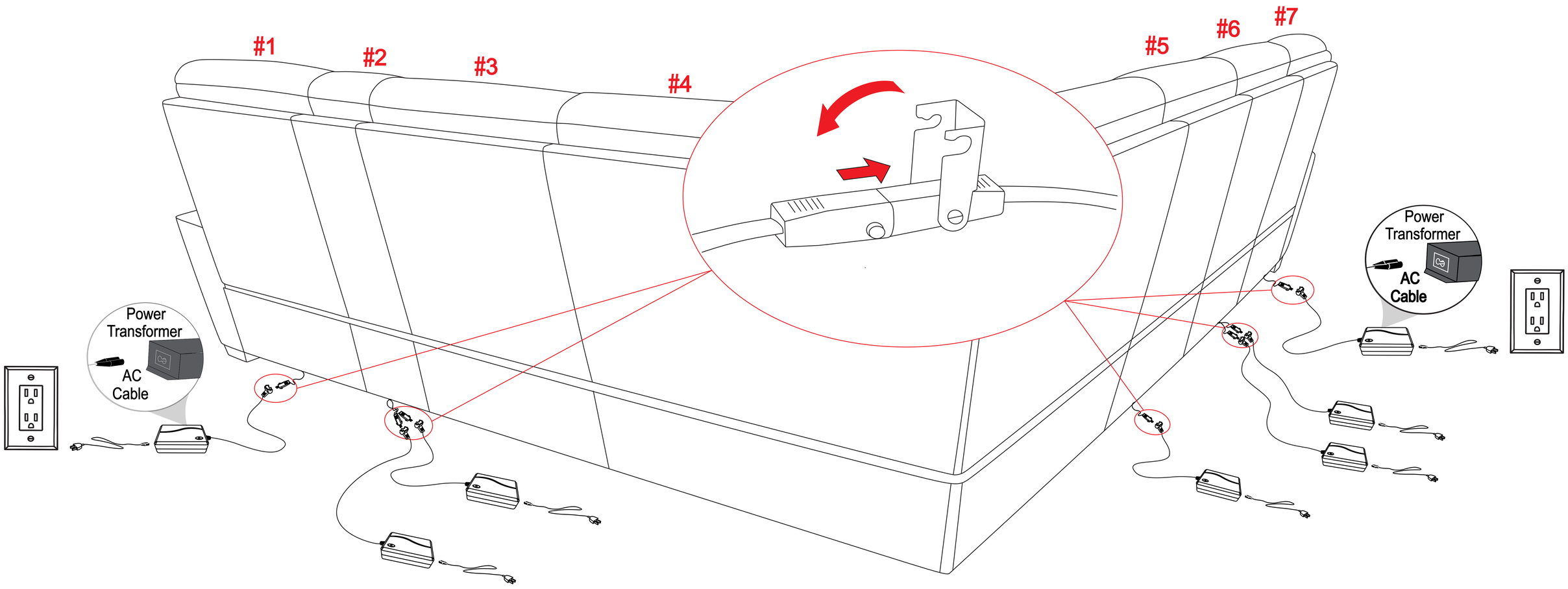

Figure 8

Disassembly Instructions

Unzip the zipper between the Back (A) and the Seat (B). Pull up the spring leaf in bracket,
then lift Back (A) up and lay it face down on the Seat (B). Then disconnect all the cables. (See Figure 9.)

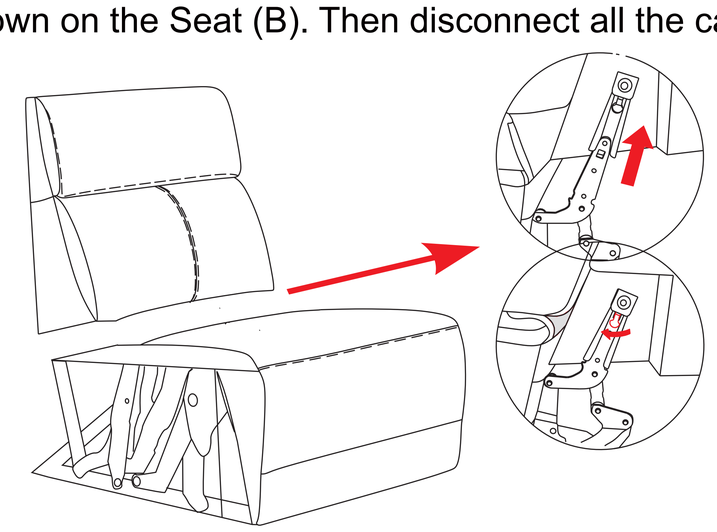

Figure 9

IMPORTANT NOTE

- To avoid any risk of suffocation to children or pets, dispose of all plastic bags immediately.
- To ensure proper performance, occasionally check for loose hardware and tighten as needed.
- If the reclining functions are not working properly, check for loose cable connections before contacting the retailer.
- Always connect the power cable to the transformer before plugging the transformer into the outlet, and unplug the transformer from the outlet before disconnecting the power cable from the transformer.

Flexsteel Industries, Inc.
For Custommer Service call toll-free:
P: 563-556-7730
Monday-Friday, 8:00-5:00pm Central Time
Email: PulseSupport@flexsteel.com