EUROfase

Grafice, Flush Mount , 13", Gold-Black Mix

Item No.
39315-014

JOB NAME: **DATE:** **TYPE:**

COMMENTS:

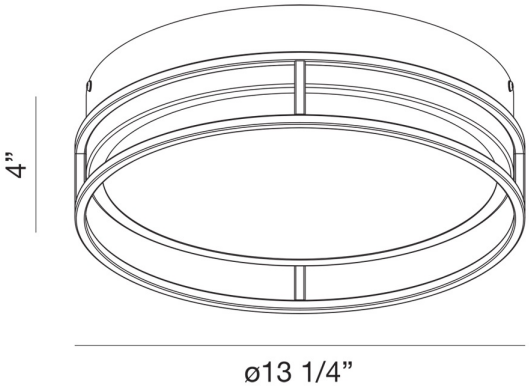

LIGHT INFORMATION

Light Type	Integrated LED
Bulb Socket	N/A
Bulb Shape	N/A
Bulb Included	Yes
CRI	90
Delivered Lumens	900
Colour Temperature (Kelvin)	3000K
Average Hours LED (L70)	20000
Number of Lights	1
Light Direction	Ambient
Dimming Method	Triac/Elv
Output Voltage	36
Current Type	DC

LIGHT INFORMATION (CONT’D.)

Light Wattage	20
Total Wattage	20

DIMENSIONS & WEIGHT

Product Width (In)	
Product Height (In)	4
Product Ext (In)	
Product Diameter (In)	13.25
Product Weight (Lbs)	5.99
Product Length (In)	

INSTALLATION

Mounting Type	J-Box
Mounting Location Rating	Dry

PRODUCT FINISH

Finish: Gold-Black Mix

SHADE FINISH

Shade Finish: N/A

PRODUCT FEATURES

Feature 1:

Feature 2:

Feature 3:

CERTIFICATIONS & COMPLIANCE

COPYRIGHT © EUROFASE LTD.