KINGSTON

TO ORDER PARTS, CALL: 1-877-252-7277
www.kingstonbrass.com

VRTDE612922

60" Solid Surface White Stone Freestanding Tub with Pop-UP Drain

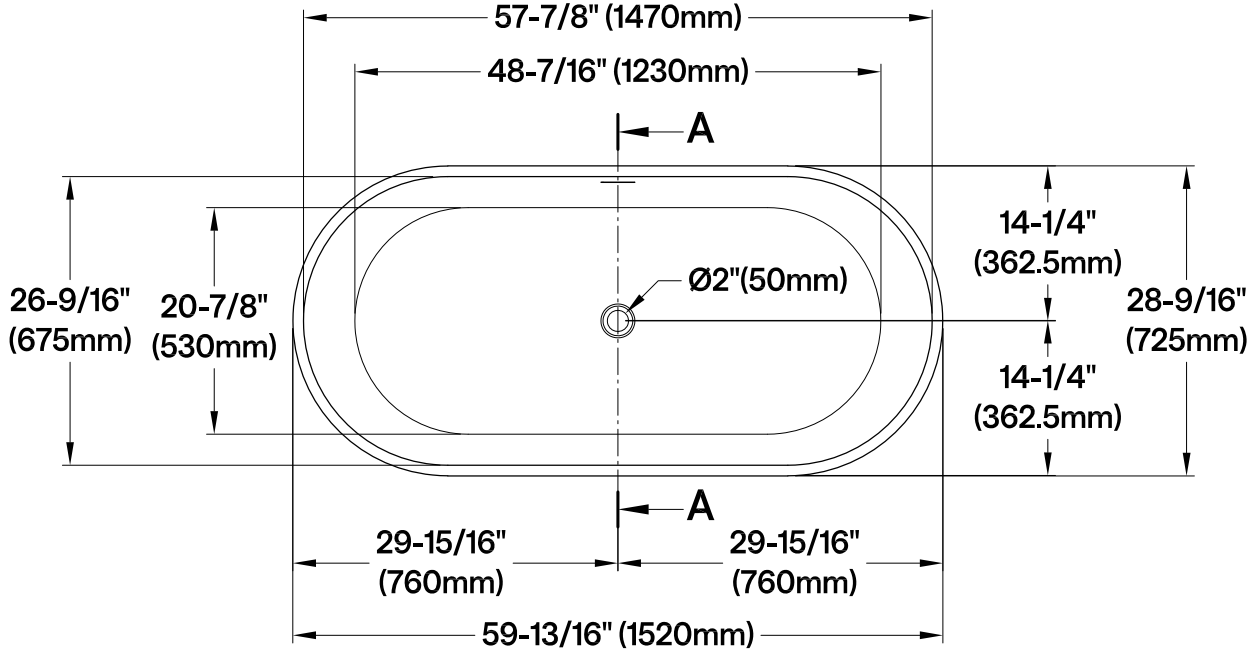

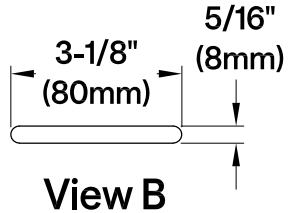

View B
SCALE (5:1)

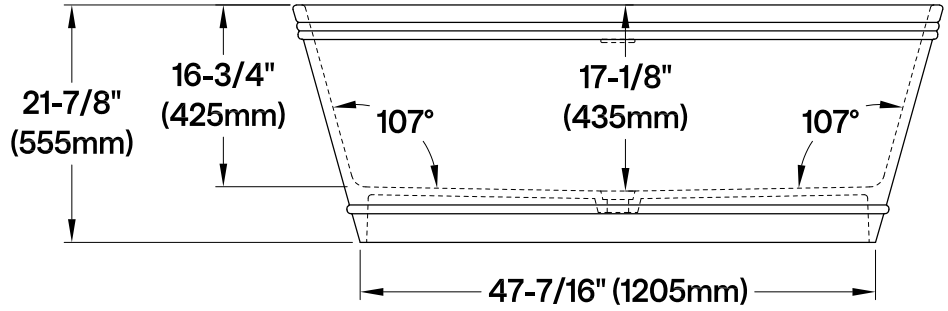

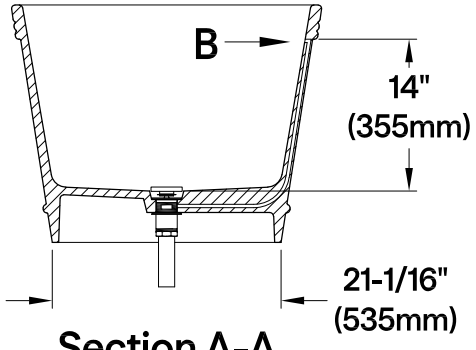

Section A-A

2026-04-A