ASSEMBLY INSTRUCTION

ENGLES ADJUSTABLE SIDE TABLE

A

X1

X1

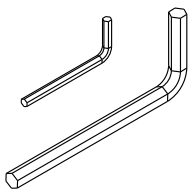

ALLEN KEY

B

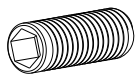

ALLEN SCREW X1

C

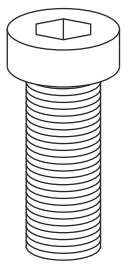

SOCKET HEAD SCREW X1

D

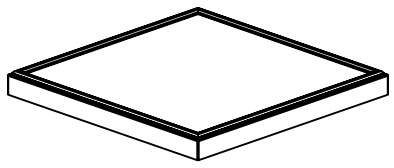

METAL TOP X1

E

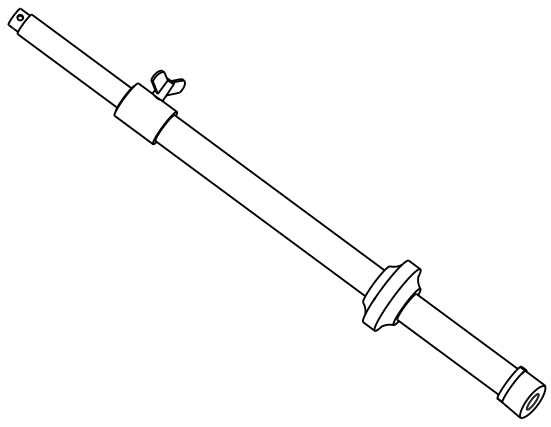

MIDDLE POST X1

F

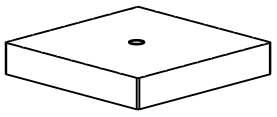

METAL BASE X1

STEP-1

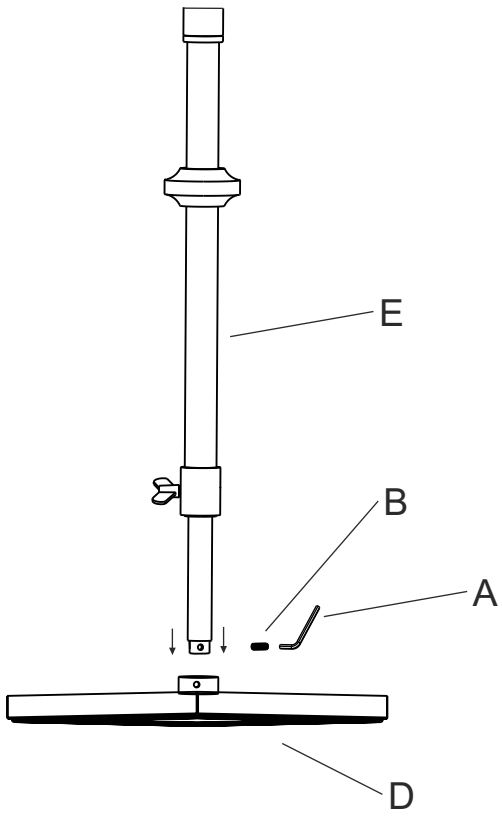

STEP-2

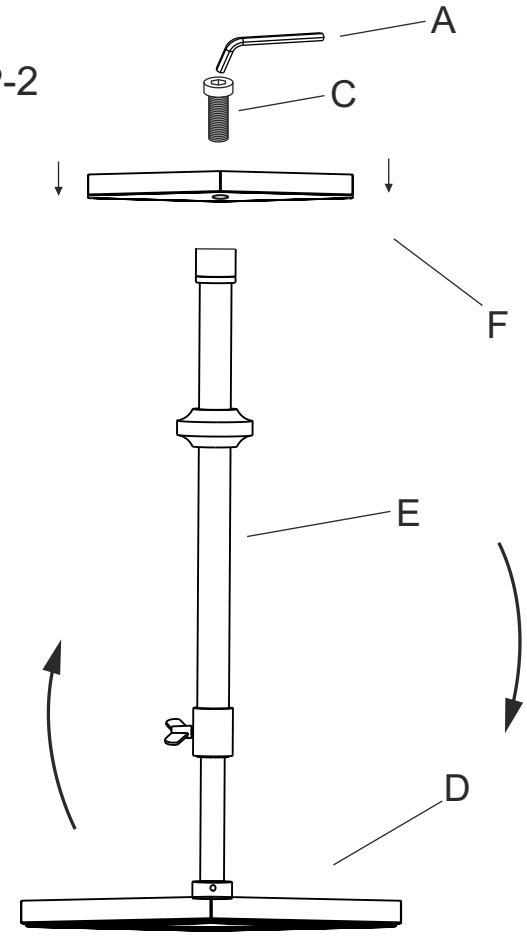

STEP-3

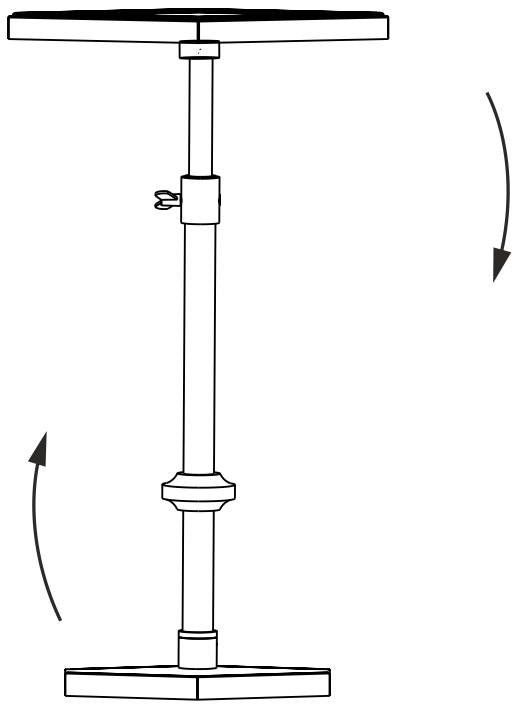

Side View

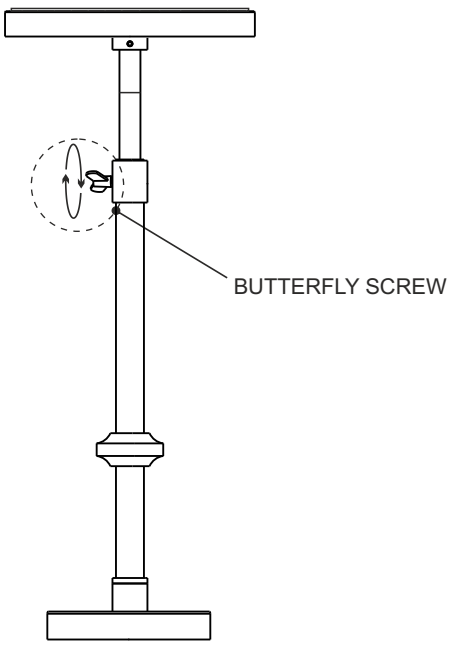

Front View

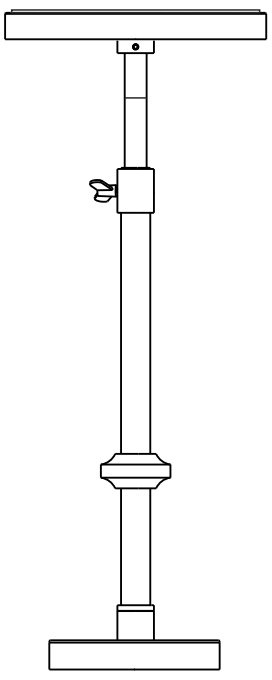
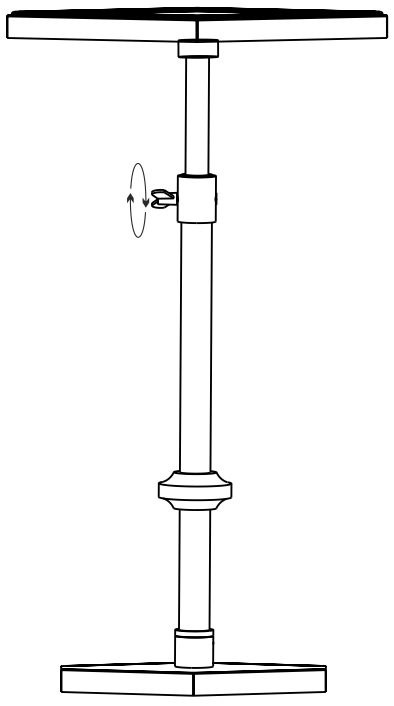
STEP-4 ASSEMBLED