KINGSTON

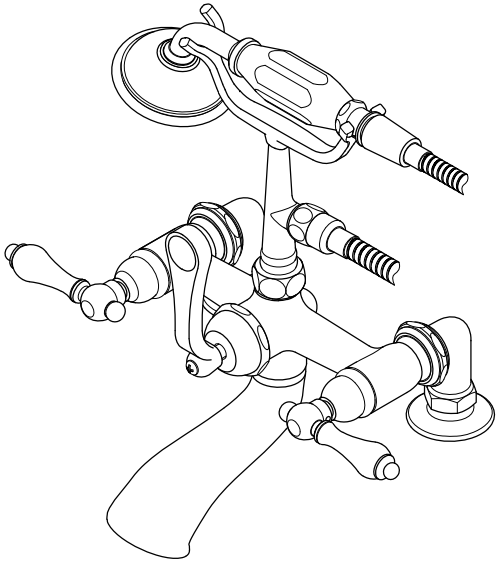

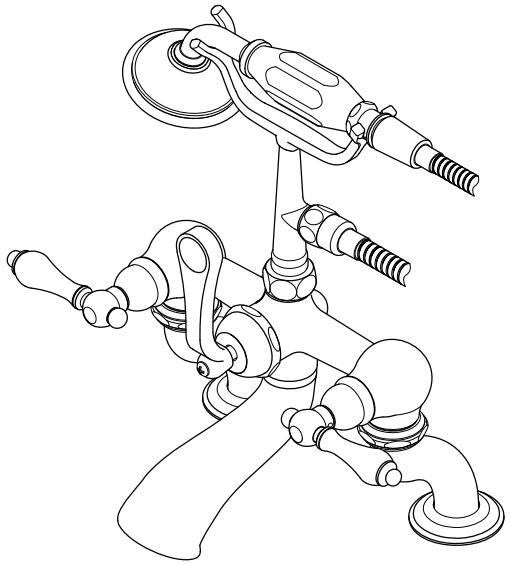

Parts:

Lock Nut	Copper Shank
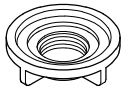	
2 Pcs	2 Pcs

www.kingstonbrass.com

TOLL-FREE CUSTOMER SERVICE: 1-877-2-KBRASS
TECHNICAL SUPPORT E-mail: service@kingstonbrass.com
12775 Reservoir Street, Chino, CA 91710

NOTICE

Failure to follow all directions may cause leaks which may result in water damage

KINGSTON

INSTALLATION INSTRUCTIONS
Deck Mount Tub Filler with Hand Shower

BEFORE BEGINNING INSTALLATION:

1. Flush plumbing lines to clear any debris.
2. Shut off both supply lines after flushing.

Need Tools:

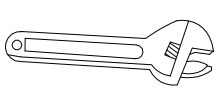
Adjustable Wrench


Teflon Tape

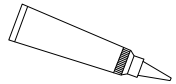
Silicone Sealant

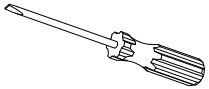
Screwdriver

1

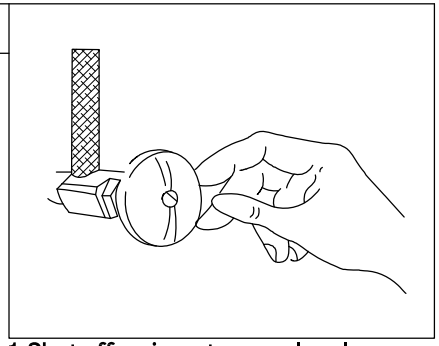

1. Shut off main water supply valve before installation.

2

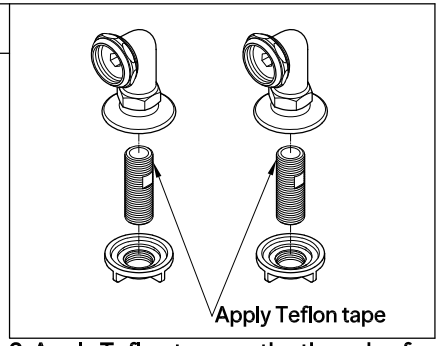

2. Apply Teflon tape on the threads of the copper shank. Install the risers.

3

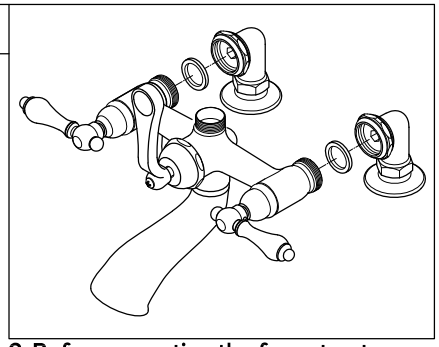

3. Before mounting the faucet onto supply risers, apply small black washers onto both water inlets of faucet.

4

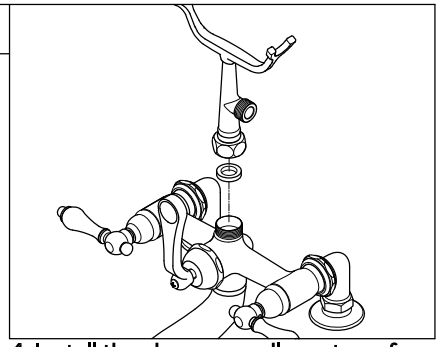

4. Install the shower cradle on top of faucet body.

5

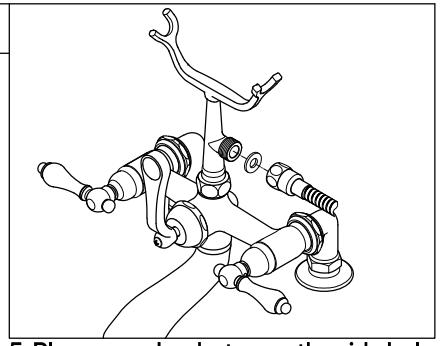

5. Place a washer between the side hole of the shower cradle and the cone nut of the shower hose. Tighten the cone nut.

6

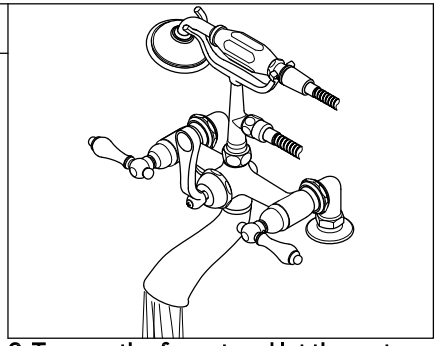

6. Turn on the faucet and let the water run for at least one minute. This will clear any debris left in the line. Check for leaks, especially at all supply line connections.

7

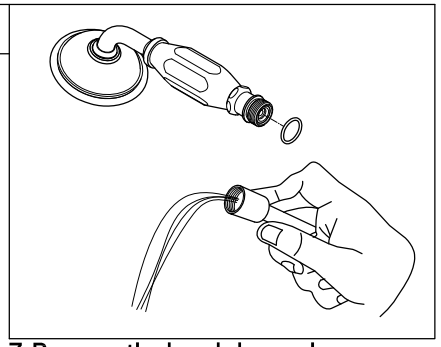

7. Remove the hand shower by unscrewing the shower in a counter clockwise direction, turn on both hot and cold valves and let water run for at least one minute, this will clear any debris left in the line.

Warning!!!

- DO NOT STEP ON faucet or supply line installation. This fixture is not a stair to access your storage, window or access higher ceiling. This Cast Brass Faucet cannot support your body weight. To step on faucet will crack the fitting and eventual fracture to cause water damage to your property.
- The faucet was tested and meets ASME/ANSI code on its operation, loading and torque pressure. However this faucet is not designed to support weight over 250 pound per square inch of pressure, DO NOT OVERTIGHTEN.
  DO NOT APPLY ELECTRICAL TOOL to fasten faucet installation.
- For Exposed tub supply line installation faucet model, your supply lines have to be installed on corner area, or at area with no walking traffic access to cause accidental tamper or accidental breakage. For installation of exposed supply line at open traffic area is prohibited.
- Removal of this tag prior to installation will void your warranty. Pass the WARNING TAG to the owner after installation.

Warning!!!

- Do not over-tighten nut during installation.
- Over-tighten may crack the valve and cause severe leak.

©2025 LVC Kingston LLC. All Rights Reserved.
2025-12-C

KINGSTON

Straight Bath Supply
Installation Instructions

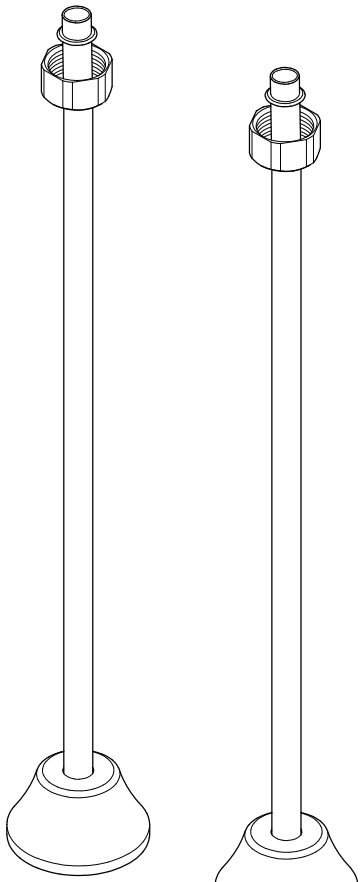

Parts:

Flange	Cone Washer & Coupling Nut & Friction Ring (3/4-14 NPS)	Cone Washer & Coupling Nut & Friction Ring (1/2-14 NPS)	Comp. Nut & Ferrule
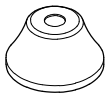	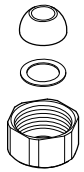	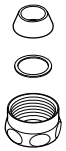	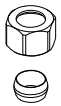
2 Pcs	2 Pcs	2 Pcs	2 Pcs

NOTICE

Failure to follow all directions may cause leaks which may result in water damage

www.kingstonbrass.com

TOLL-FREE CUSTOMER SERVICE: 1-877-2-KBRASS
TECHNICAL SUPPORT E-mail: service@kingstonbrass.com
12775 Reservoir Street, Chino, CA 91710

Before starting the installation :

Straight supply lines are designed to be installed on tubs that are configured for deck mount faucets and should be installed at the same center to center distance as that of the tub faucet holes, the supply lines should be installed in a plumb vertical position. Before starting the installation, we recommend:

- That you have the supply lines and faucet at the jobsite prior to preparing the rough-in water supply.
- Install the supply lines on shut-off valves with 1/2" compression outlets and have them on-site.

Installation Steps:

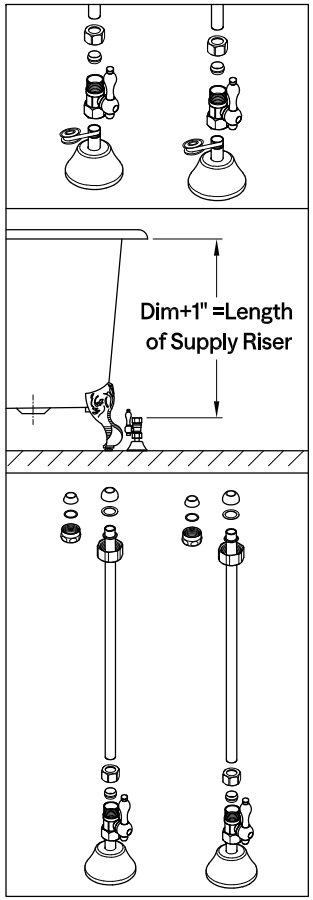

1. Place the tub at the desired location and install the faucet on the tub, using the supply lines to mark the location where the supply pipe rough-ins should be located, the supply lines are designed to be installed in a vertical plumb position, make sure the rough-in water supply pipes are well secured to prevent any movement that would pull on the connection to the supply lines.
2. Rough in the supply pipe to accommodate either the shut-off valves or the supply line.
3. Make sure that the outlets on the shut-off valves are designed for a 1/2" compression outlet. The flange included in the product is only for 1/2" OD tube, so you may need to add a flange that can accommodate the bigger diameter of the pipe that you are using as a supply rough-in. Install flange and shut-off valve to your rough -in pipe. If your rough-in pipe is NPT (taper) threaded, Teflon tape needs to be applied on the thread prior to the installation. Measure the distance between the top of the shut-off valve and the bottom of the faucet shanks and add 1 ", cut supply line on the appropriate dimension.
4. Apply Teflon tape the faucet shanks, slide the friction ring, cone washer and coupling nut onto the outlets of the supply lines. There are 2 sets of slip-joint parts (1/2" and 3/4") available in the products for your choice, depended on what your faucet shank size is (1/2 or 3/4 NPSM).
5. Slide in 1/2" compression nuts and brass ferrules to the inlets of the supply lines.
6. Use a wrench and slowly tighten up the comp. nuts to connect with the shut-off valves, then tighten up the coupling nuts to connect with the faucet shanks. Open the shut-off valves and check for leaks.

Installer: Please pass this label on to homeowner after installation.

Warning!!!

- Make sure that supply lines are installed in a vertical plumb position, failure to do so may pull on the supply lines and cause leaking.
- Reshaping, bending or altering supply line (except for cutting to size) or use of nuts or washers not supplied with this kit will void your warranty.
- It is recommended that the tub be situated in an area where the supply lines are not exposed to foot traffic, bumping into the supply lines may damage them and potentially cause a leak.

©2025 LVC Kingston LLC. All Rights Reserved.

2025-12-D

KINGSTON

Tub To Shower Diverter

Installation Instructions

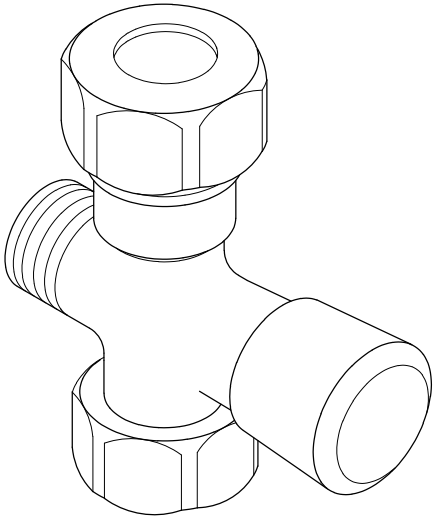

NOTICE

Failure to follow all directions may cause leaks which may result in water damage

www.kingstonbrass.com

TOLL-FREE CUSTOMER SERVICE: 1-877-2-KBRASS
TECHNICAL SUPPORT E-mail: service@kingstonbrass.com
12775 Reservoir Street, Chino, CA 91710

Note:

- This diverter is intended for installation between tub faucet with 3/4 NPSM male thread and shower riser with tube 5/8" OD.

Tub or riser with different thread or size may not fit and will cause leakage.

Installation:

1. Install the diverter onto the tub outlet by tightening the swivel nut on the bottom of the diverter with an adjustable wrench.
   WARNING: DO NOT OVER-TIGHTEN.
2. Insert the HEX nut, then carefully push the cone washer onto the shower riser.
   Make sure the end of riser protruded from the cone washer about 1/2" and the taper surface of cone washer is facing down.
   Thread and slowly tighten up the HEX nut on the diverter with an adjustable wrench.
   WARNING: DO NOT OVER-TIGHTEN.
3. Connect the shower hose to the 1/2 NPSM male outlet on the side of diverter by hand.
   Make sure a rubber washer inside your shower hose adapter.
4. Turn on water, push and pull the diverter handle a few times for the leakage and function test.
   Make sure no water leakage on all connection.

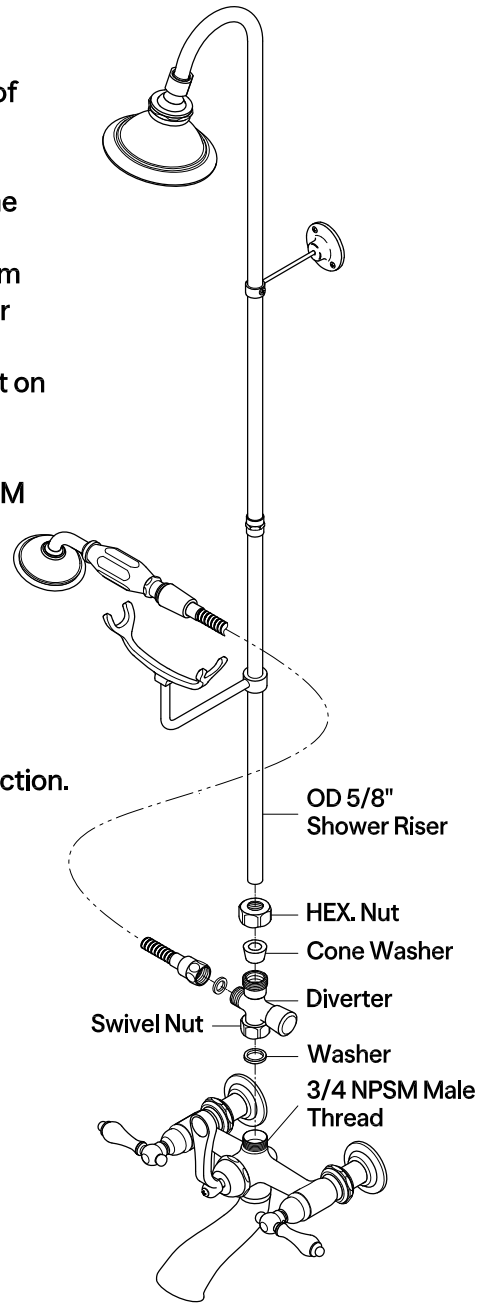

©2025 LVC Kingston LLC. All Rights Reserved.
2025-06-D

KINGSTON Shower Riser with Rectangular Enclosure

Installation Instructions

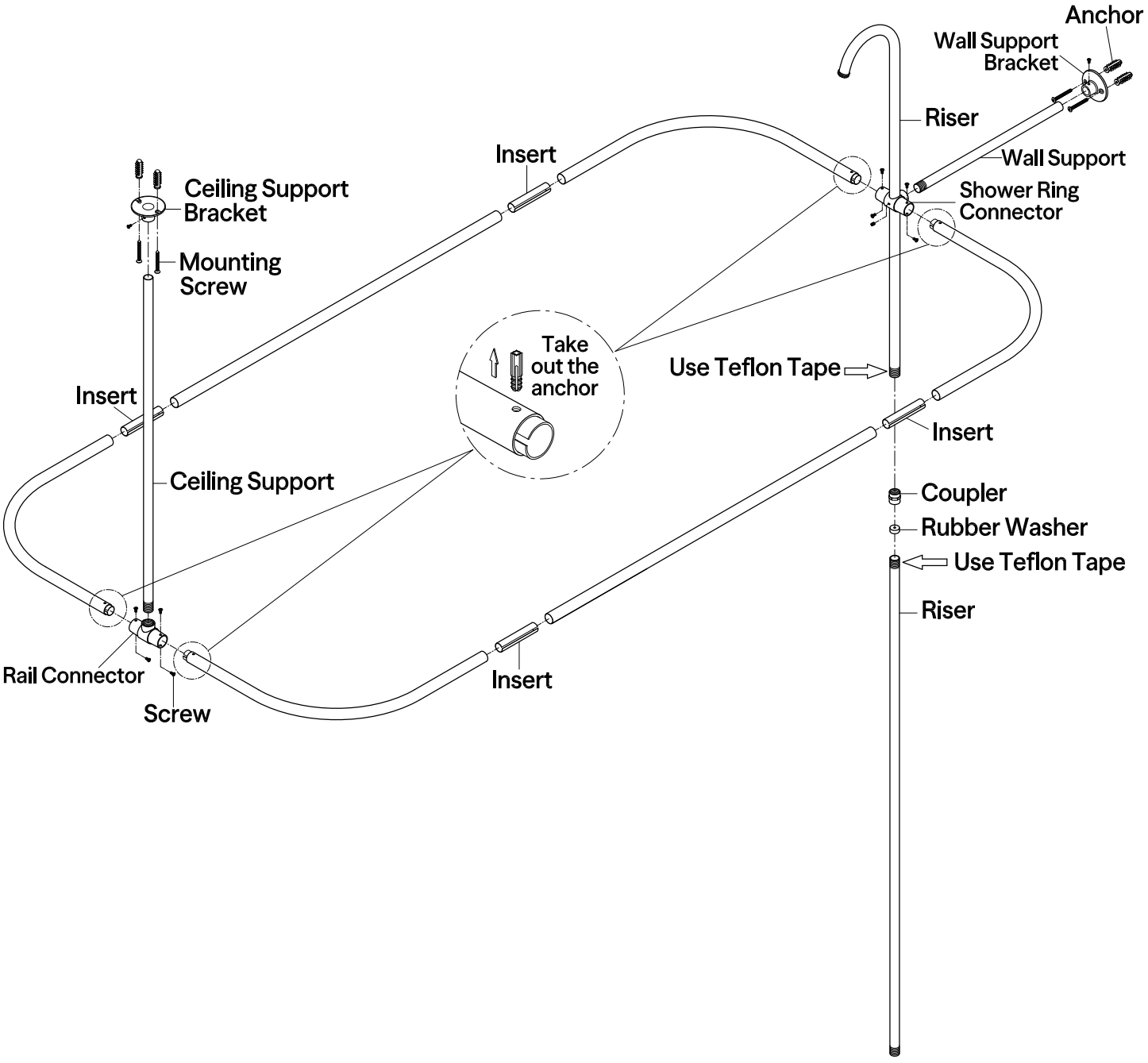

Parts:

Mounting Screw & Anchor	Screw	Set Screw
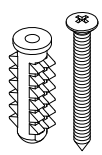		
4 Pcs	10 Pcs	1 Pc

www.kingstonbrass.com

TOLL-FREE CUSTOMER SERVICE: 1-877-2-KBRASS
TECHNICAL SUPPORT E-mail: service@kingstonbrass.com
12775 Reservoir Street, Chino, CA 91710

NOTICE

Failure to follow all directions may cause leaks which may result in water damage

⚠CAUTION

Failure to follow all installation directions may cause product to detach from the wall and cause serious injury

Before Beginning Installation:

1. Flush plumbing lines to clear debris in pipe and plumbing lines to avoid existing clogs into waterway & cartridge system of new faucet fixture.
2. Shut off both supply lines after flushing.

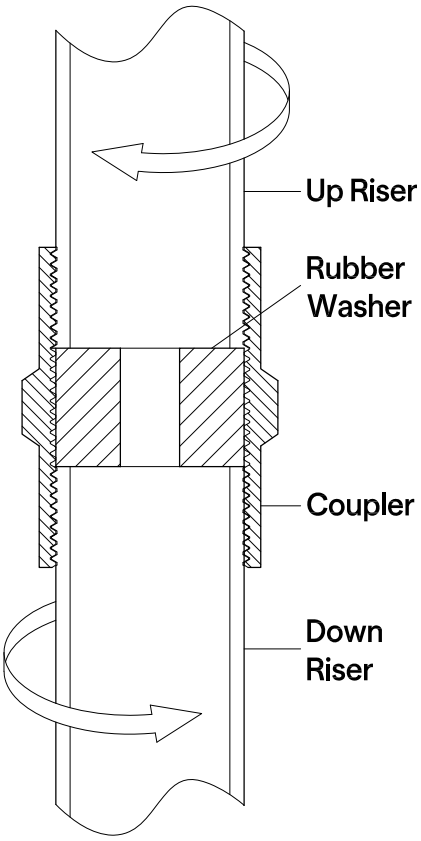

Installation Steps:

Step 1. Insert the thick rubber washer inside the coupler.
Step 2. Apply Teflon tape on both thread ends of up and down risers.
Step 3. Thread both up and down risers onto coupler.
Step 4. Make sure the rubber washer is properly compressed between the up and down risers. Also, the coupler should be tightly connected; no looseness is allowed.

Warning !!!

If the rubber washer is loose inside the coupler or not compressed, it will not effectively seal the water and will lead to leakage.

©2025 LVC Kingston LLC. All Rights Reserved.
2026-06-D

Cleaning

Clean with a damp cloth only.
Avoid using metal or abrasive polishes.

KINGSTON

Shower Head
Installation Instructions

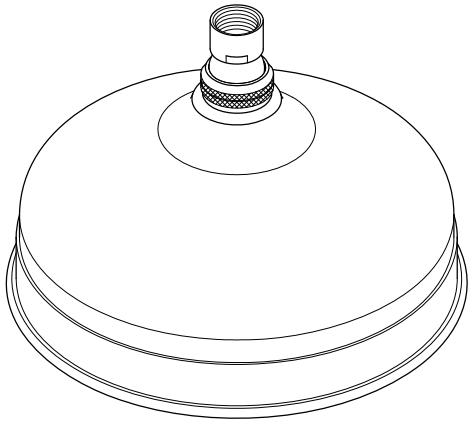

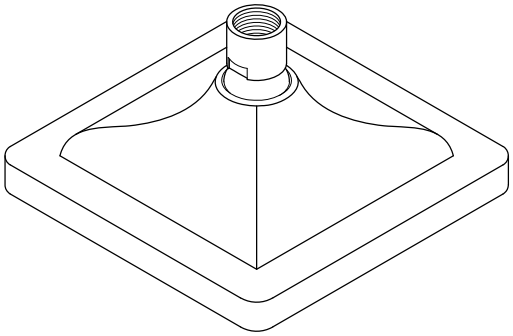

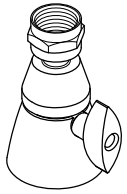

NOTICE

Failure to follow all directions may cause leaks which may result in water damage

www.kingstonbrass.com

TOLL-FREE CUSTOMER SERVICE: 1-877-2-KBRASS
TECHNICAL SUPPORT E-mail: service@kingstonbrass.com
12775 Reservoir Street, Chino, CA 91710

Tools Required

 Teflon Tape

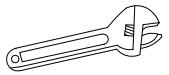 Adjustable Wrench

Remove the Original Shower Head :

1. Remove old shower head from the shower arm by turning counterclockwise.
2. After removing shower head, clean any debris from the threads of the shower arm.

Install the Shower Head :

1. Wrap Teflon tape 3 or 4 times clockwise around the 1/2 NPT male threads of the shower arm. If using a straight thread (1/2 NPSM), Teflon tape is optional, but ensure the shower head's inner thread is also straight and has a rubber washer.
2. Install the new shower head by turning it clockwise slowly and carefully, ensuring a proper connection. Avoid over-tightening, as this can cause damage and leaks.
3. Turn on the water to check for leaks. If leaks are found, loosen and re-tighten the shower head, repeating steps 1 and 2.

※ If leaking persists, it may be necessary to add more Teflon tape on the threads to ensure proper water seal.

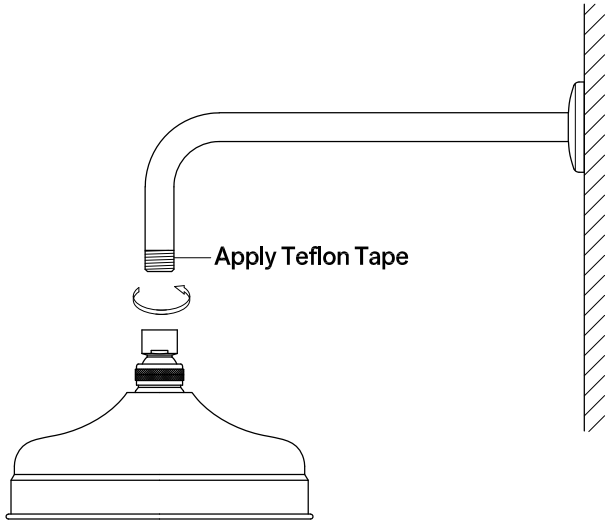

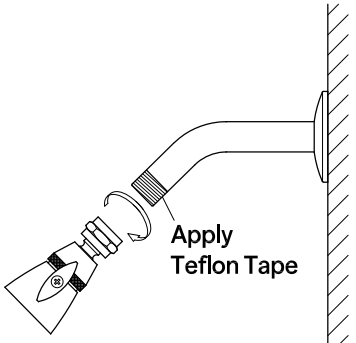

©2025 LVC Kingston LLC. All Rights Reserved.

2025-05-TD

KINGSTON

Brass Tub Bath Drain

Installation Instructions

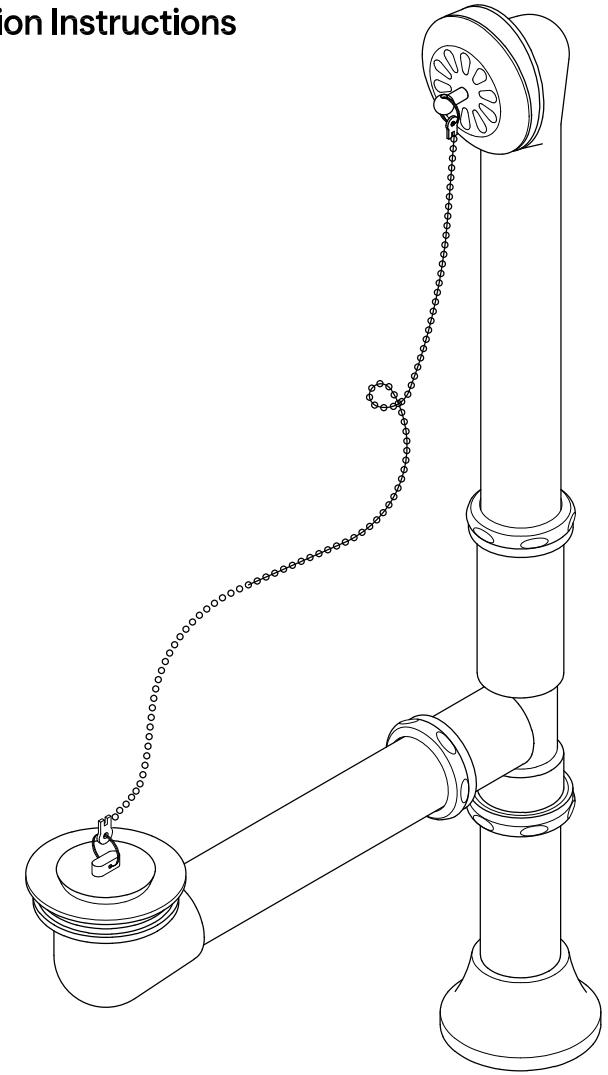

NOTICE

Failure to follow all directions may cause leaks which may result in water damage

www.kingstonbrass.com

TOLL-FREE CUSTOMER SERVICE: 1-877-2-KBRASS
TECHNICAL SUPPORT E-mail: service@kingstonbrass.com
12775 Reservoir Street, Chino, CA 91710

Tools Required



Note:

1. Observe all local plumbing and building codes.
2. Inspect waste and supply tubing; replace if necessary.
3. If you are installing a new bath, install the drain before installing the bath. Refer to the manufacturer's installation instructions.
4. The brass tube on (4) or (9) is glued on its elbow and can be trimmed to fit the tub. Don't try to disassemble the brass tube from elbow, or it will cause water leakage.

Installation Instructions:

1. Place rubber washer (10) onto waste tube (9) and set them under the tub.
2. Apply Teflon tape on strainer thread and a bead of silicone sealant under waste strainer (11) and thread into waste tube (9). Wipe off excess sealant.
3. Because the back slope angle on tubs vary, we have included 2 gaskets for you, select the rubber gasket that more closely matches your tubs angle, discard remaining rubber gasket. Place rubber gasket (3 or 3-1) on elbow portion of the overflow tube, hold to the back of the tub at the overflow opening and screw in cover plate.
4. Slip joint nuts (5) and Washers (6) onto overflow tube (4), waste tube (9) and drain tube (8).
5. Apply Teflon tape to all three threads on three way tee (7).
6. Slip tee onto the waste tube (9), overflow tube (4) and drain tube (8), adjust to desired location and tighten slip joint nuts.
   Depending on the size of your tub it may be necessary to cut any or both tubes.
7. Thread on drain tube (8) and onto the escutcheon (12), make the necessary connection to your drain system.
8. Fill tub with water, sufficient to cover the overflow cover plate (2), check for leaks and retighten any connections as necessary.

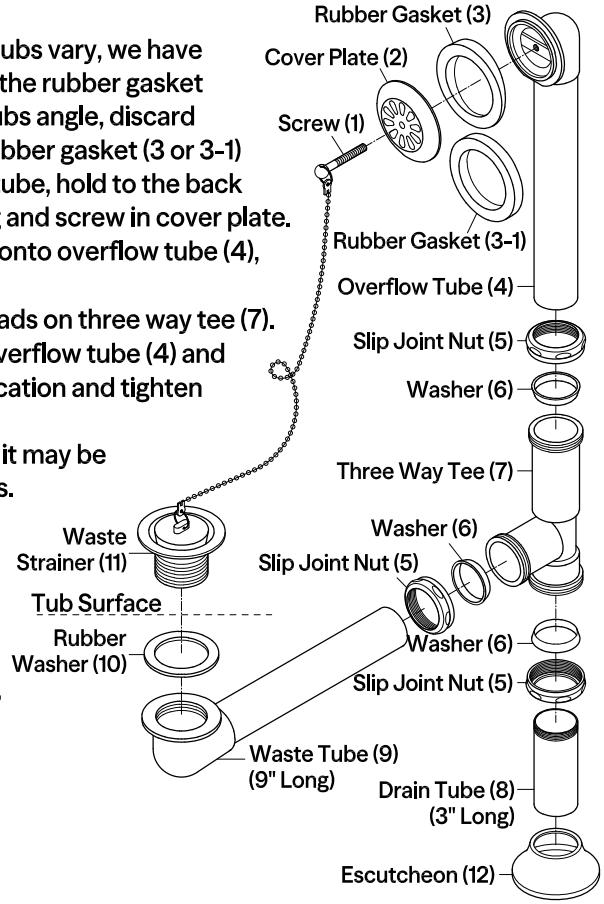

©2025 LVC Kingston LLC. All Rights Reserved.

2025-05-D