Safety information

⚠ WARNING:

- Only qualified professionals should handle electrical wiring/devices.
- Install and use this product in accordance with applicable electrical codes and regulations in your region.
- The device is designed for indoor use in dry locations only.
- This device can not be used for inductive loads.
- Keep this manual as it contains important technical data, testing, and troubleshooting information which may be useful after installation is complete.
- The IQ Dimmer-PG is not compatible with standard 3-way or 4-way switches.
- Do not disassemble the product or make repairs yourself. Doing so may result in electric shock and will void the limited warranty.
- If you require assistance, contact our after-sales services.
- Make sure to use this product together with a 15A circuit breaker.
- Do not use smart lights and smart bulbs with the IQ Dimmer-PG.
- Aluminium wiring is not compatible with the IQ Dimmer PG. Do not use aluminium wiring when you install the IQ Dimmer PG.

Overview

The IQ Dimmer-PG is a wireless smart device that enables you to control your indoor lighting remotely through your control panel. For panels that are compatible with the IQ Dimmer-PG, see https://bit.ly/3r2jWbI.

Figure 1: Device controls

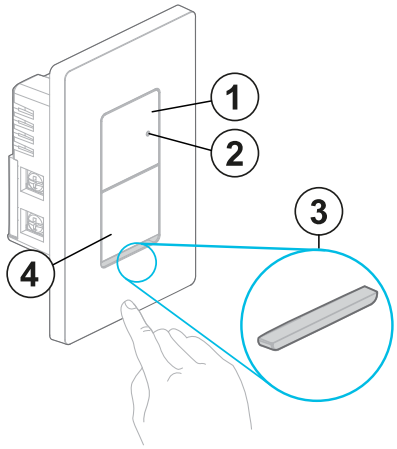

Table 1: Device overview

Callout	Name
1	Dim up
2	Status LED
3	Air gap
4	Dim down

Installing the device

⚠ **WARNING:** Before installing the device, make sure that the electrical supply to the area is turned off. Failure to do so may result in electric shock or serious injury.

ⓘ **Note:** This device uses copper alloys in the terminal. Do not install with aluminium wiring.

1. Turn the power off at the circuit breaker.
2. Remove the existing dimmer and connect the new dimmer according to Figure 2 and Figure 3.

   ⓘ **Note:** Pull the air gap out of the dimmer.

Figure 2: Wiring diagram

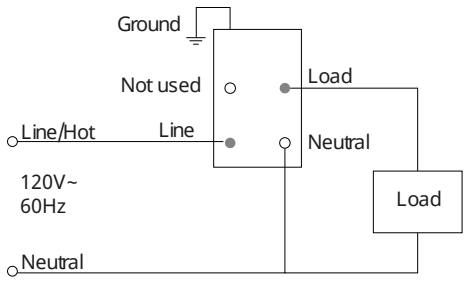

Figure 3: Connecting the new dimmer

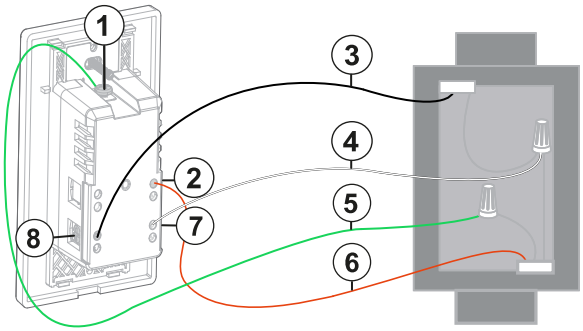

Callout	
1	Terminal screw marked green
2	Terminal screw marked black
3	Line wire colored black
4	Neutral wire colored white
5	Ground wire colored green

Callout	
6	Load wire colored red
7	Terminal screw marked white
8	Terminal screw marked black

3. Mount the dimmer with the screws and attach the faceplate. If you are using an electric screwdriver, set the torque it to 1.2 Nm of torque to avoid overtightening the screws.

Figure 4: Mounting the device

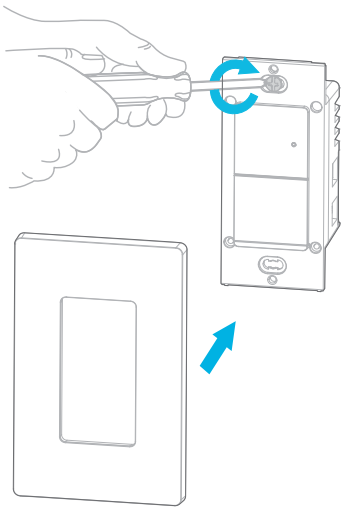

4. Turn power on at circuit breaker.
5. Reinsert the air gap onto the dimmer.

Enrolling the device with Auto Learn Enroll

Before you begin: Ensure power is connected to the device.

1. On the IQ panel menu, select **Settings > Advanced Settings > Enter Installer Code > Installation > Devices > Automation > Auto Learn Devices.**
2. Press and hold the dim up and dim down buttons until the LED turns orange for 2 seconds.
3. Release the buttons, and the LED turns off. The device enters enrollment mode, and the panel is notified of the device initiating enrollment.
4. When the device is recognized, tap **OK** when the pop-up window appears. Enter the device details in the next configuration pop-up window.
5. **Optional:** Enter the PIN code on the product label for increased security during enrollment. The device does not pair with the panel if you enter an incorrect PIN code.
6. Tap **Pair**.
7. If the device does not automatically enroll, perform a factory reset as indicated in the Resetting the device section of the user manual.

   Result: The device enrolls successfully and returns to the IQ Panel menu.

Enrolling the device with Add PowerG

Before you begin: Ensure power is not connected to the device.

You can enroll the device in the IQ panel using the Add PowerG feature or scan the QR code on the box. To enroll the device in the IQ panel using the Add PowerG feature, complete the following steps:

1. On the IQ panel menu, select **Settings > Advanced Settings > Enter Installer Code > Installation > Devices > Automation > Add PowerG.**
2. Enter the sensor id in the Sensor ID field or scan the QR code on the box label to enroll the device.
3. **Optional:** Enter the PIN code on the product label for increased security during enrollment. The device does not pair with the panel if you enter an incorrect PIN code.
4. Tap **Pair.**
5. Plug in and power on the device.
   Result: The device enrolls successfully.

Considerations when you enroll a device

The following considerations apply when you enroll a device with PowerG or when you enroll a device with Auto Learn enroll.

- If the buttons remain pressed after the light is turned off, the device returns to low-power mode.
- If the connection is successful, the PowerG signal strength displays on the device and the enrolled status on the control panel. For more information, see LED indication and configuration.
- If the connection fails, a **Not enrolled** status indicates on the control panel.
- The IQ Dimmer-PG enrolls as one individually controlled device.

Checking the PowerG signal strength of the device

1. Ensure that the IQ Dimmer-PG is powered on.
2. On the IQ panel, tap **Settings** > **Advanced Settings** > **Enter Installer Code** > **Installation** > **System Tests** > **PowerG Test** > **Run**

LED indication and configuration

- LED flashes orange 3 times when delay off is activated.

Table 2: Device configuration state

#	Configuration	Definition
1	Activation LED enabled	Green LED appears when the device is powered on. Green LED does not appear when the device is powered off.
2	Activation LED disabled	LED is always off. **Note:** The IQ Dimmer-PG operations that require feedback overrides the Activation LED disabled mode. These operations are the PowerG signal strength test and the Delay Off Timer.

Note: If the connection fails and the LED indicator turns off, reset the device to factory default. For more information see, Resetting the device.

Manual operation

Table 3: Device operations

Action	Status	Function
Short press the Dim Down button	On	Turns the light Off.
	Off	Keeps the light Off.
Short press the Dim Up button	On	Keeps the light On.
	Off. Dim value is more than 0%	Turns the light On and sets to the previous dim value.
	Off. Dim value is 0%	Turns the light On and sets dim value to 100%.
Long press the Dim Up button	On. Dim value is less than 100%	Increases light brightness according to the dim value in 20% increments per second. Green LED blinks when the dim value reaches 100%.
	Off	Turns the light On to previous dim setting. • If the light is On and the last percentage dim value is less than 100%, increase the light brightness according to the dim value in 20% increments. • If the last percentage dim value is 100%, the green LED blinks.

Table 3: Device operations

Action	Status	Function
Long press the Dim Down button	On. Dim value greater than 0%	Decreases the light brightness according to the dim value in 20% increments. The green LED blinks when the dim value reaches 0%.
	Off	Keeps the light Off.
Double click the Dim Down button	On	The dimmer switchs the light Off after a 5 minute delay as hardware default.
Short press the Dim Down button	Delay Off	Immediately turns the light Off and cancels the delay off timer.
Long press the Dim Down button	Delay Off	• Decreases the light brightness in 20% increments. • Cancels the delay timer.
Short press the Dim Up button	Delay Off	Immediately turns the light On and cancels the delay timer.
Long press the Dim Up button	Delay Off	• Increases the light brightness in 20% increments. • Cancels the delay timer.

Additional behavior of the device

Behavior	Corresponding behavior
Control the light on or off using the built-in button	The IQ Panel updates the status within 10 seconds.
When enrolled	The IQ Panel registers the device as a PowerG device.
When power is removed from the device	The IQ panel updates the device status to unreachable within 14 minutes.
When power is restored to the device	The IQ panel automatically updates the device status to normal within 5 minutes.
When communication is lost and then restored	The IQ panel automatically updates the device status to normal within 5 minutes.

Resetting the device

1. Press and hold both dim-up and dim-down buttons for at least 2 seconds. The LED turns orange to indicate a long press.
2. Release briefly, then press and hold both buttons again for 5 seconds until the LED turns red and flashes 3 times to indicate a device reset back to factory default.

   ⓘ **Note:** After a device is reset back to factory default, you must delete it from the panel and re-enroll the device.

Troubleshooting

⚠ **WARNING:** The wiring should only be changed in accordance with applicable electrical codes and regulations in your region.

⚠ **WARNING:** Only a qualified professional should attempt to change electrical wiring.

Lamp does not dim, has poor dimming range, or they flicker or buzz.

- The lamp is not compatible with the dimmer. Check with the lamp manufacturer to ensure that the lamp is compatible with dimmers.

Lamp flickering

- The lamp needs a better connection.
- Wires need to be firmly secured under the terminal screws of the dimmer.

Lamp does not turn on and LED indicator does not turn on

- Check if the circuit breaker or fuse has tripped.
- Check if the lamp is burned out.
- The lamp neutral connection is not wired.

Unable to control the lamps remotely

- Check if the IQ Dimmer PG is connected to the IQ Panel and ensure the wiring is correct.

Specifications

Frequency range	912-919MHz
Communication protocol	PowerG
Power supply	120V at 60Hz
Maximum load	Incandescent 200W, CFL/LED 100W
Standby power consumption	<1W
Maximum current	1.67A
Wiring	Terminal block connection, wire gauge16-10 AWG
Humidity	0% to 85%, non condensing
Operational temperature	0°C to 40°C or 32°F to 104°F
Storage temperature range	-20°C to 60°C or -4°F to 140°F
Device dimensions (L x W x H)	116.84 mm (4.6 in.) x 72.9 mm (2.87 in.) x 41.91 mm (1.65 in.)
Device weight	137 g

Compliance with standards

FCC and ISED Canada Compliance Statement

This device complies with FCC Rules Part 15 and with ISED license-exempt RSS standard(s). Operation is subject to two conditions:

(1) This device may not cause harmful interference, and (2) this device must accept any interference that may be received or that may cause undesired operation.

Le présent appareil est conforme aux CNR d'Industrie Canada applicables aux appareils radio exempts de licence. L'exploitation est autorisée aux deux conditions suivantes:

(1) l'appareil ne doit pas produire de brouillage, et (2) l'utilisateur de l'appareil doit accepter tout brouillage radioélectrique subi, même si le brouillage est susceptible d'en compromettre le fonctionnement.

To comply with FCC Section 1.1310 for human exposure to radio frequency electromagnetic fields and IC requirements, implement the following instruction:

A distance of at least 20 cm. between the equipment and all persons should be maintained during the operation of the equipment.

Le dispositif doit être placé à une distance d'au moins 20 cm à partir de toutes les personnes au cours de son fonctionnement normal. Les antennes utilisées pour ce produit ne doivent pas être situés ou exploités conjointement avec une autre antenne ou transmetteur.

ⓘ **Note:** This equipment has been tested and found to comply with the limits for a Class B digital device, pursuant to part 15 of the FCC Rules. These limits are designed to provide reasonable protection against harmful interference in a residential installation. This equipment generates, uses and can radiate radio frequency energy and, if not installed and used in accordance with the instructions, may cause harmful interference to radio communications. However, there is no guarantee that interference will not occur in a particular installation. If this equipment does cause harmful interference to radio or television reception, which can be determined by turning the equipment off and on, the user is encouraged to try to correct the interference by one or more of the following measures:

- Reorient or relocate the receiving antenna.
- Increase the separation between the equipment and receiver.
- Connect the equipment into an outlet on a circuit different from that to which the receiver is connected.
- Consult the dealer or an experienced radio/TV technician for help.

This Class B digital apparatus complies with Canadian ICES-003.

Cet appareil numerique de la classe B est conforme a la norme NMB-003 du Canada.

⚠ **WARNING:** Changes or modifications to this equipment not expressly approved by the party responsible for compliance (DSC.) could void the user’s authority to operate the equipment.

UL/ULC notes

The IQ Dimmer-PG has been listed by ETL for home automation applications in accordance with the requirements in the Standards UL 1472:2015 Ed.2+R:31 July 2020 for contacts and dimmers.

CAUTION:

a) TO REDUCE THE RISK OF OVERHEATING AND POSSIBLE DAMAGE TO OTHER EQUIPMENT, DO NOT INSTALL TO CONTROL A RECEPTACLE, A MOTOR OPERATED APPLIANCE, OR A TRANSFORMER-SUPPLIED APPLIANCE.

GRADATEURS COMMANDANT UN BALLAST–AFIN DE REDUIRE LE RISQUE DE SURCHAUFFE ET LA POSSIBILITE D'ENDOMMAGEMENT A D'AUTRES MATERIELS, NE PAS INSTALLER POUR COMMANDER UNE PRISE, UN APPAREIL A MOTEUR OU UN APPAREIL ALIMENTE PAR UN TRANSFORMATEUR

b) TO REDUCE THE RISK OF OVERHEATING AND POSSIBLE DAMAGE TO OTHER EQUIPMENT, DO NOT INSTALL TO CONTROL A RECEPTACLE, A MOTOR OPERATED APPLIANCE, A FLUORESCENT LIGHTING FIXTURE, OR A TRANSFORMER-SUPPLIED APPLIANCE.

GRADATEURS COMMANDANT UNE LAMPE A FILAMENT DE TUNGSTENE–AFIN DE REDUIRE LE RISQUE DE SURCHAUFFE ET LA POSSIBILITE D'ENDOMMAGEMENT A D'AUTRES MATERIELS, NE PAS INSTALLER POUR COMMANDER UNE PRISE, UN APPAREIL A MOTEUR, UNE LAMPEFLUORESCENTE OU UN APPAREIL ALIMENTE PAR UN TRANSFORMATEUR.

Safety Instructions

Read the safety information before you install the equipment.

The device shall be installed and used within an environment that provides the pollution degree max 2 and over voltages category II in non-hazardous locations, indoor only. This product is to be installed or used in accordance with local electrical codes and regulations. The device is to be installed in an indoor dry location. Exposure to weather or corrosive conditions may damage the unit.

W.E.E.E Product recycling declaration

	For information regarding the recycling of this product you must contact the company from which you originally purchased it. If you are discarding this product and not returning it for repair then you must ensure that it is returned as identified by your supplier. This product is not to be thrown away with everyday waste. Directive 2012/19/EU Waste Electrical and Electronic Equipment.

Warranty and EULA

To access Warranty and EULA information, access the following link: https://bit.ly/3r2jWbI or scan the following QR code:

Technical support

Intrusion Tech support: +1- 855-476-5797 #2 or 1-800-387-3630

©2024 Johnson Controls. All rights reserved. JOHNSON CONTROLS, TYCO and DSC are trademarks and/or registered trademarks. Unauthorized use is strictly prohibited.