PW Ladder Cable Tray Straight Section

4A12C
4"(H) Side Rail Tray

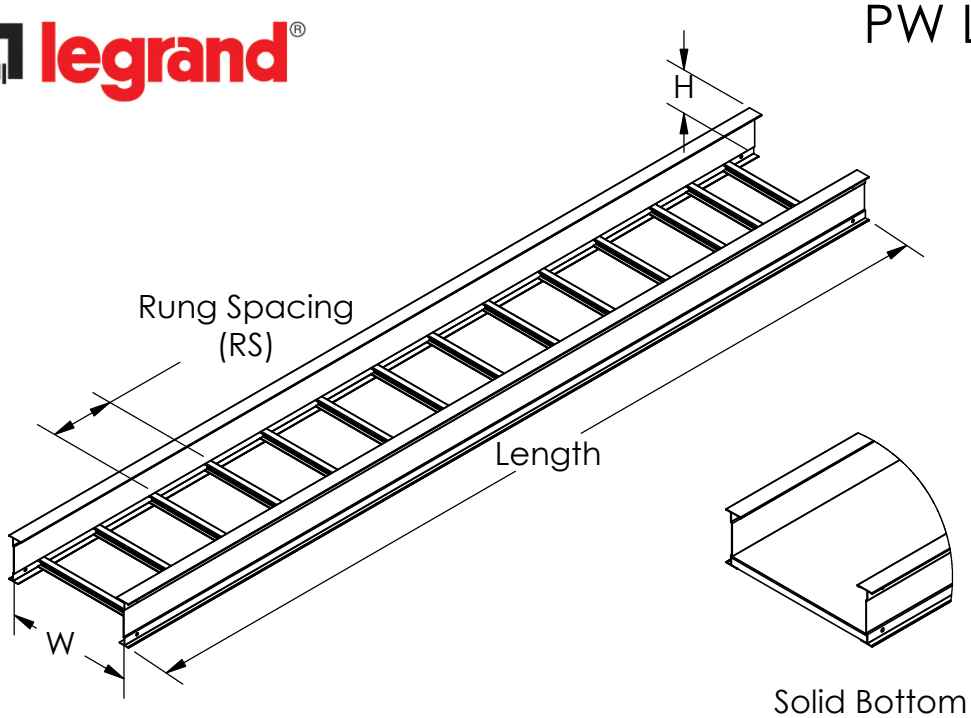

Solid Bottom
(SB)

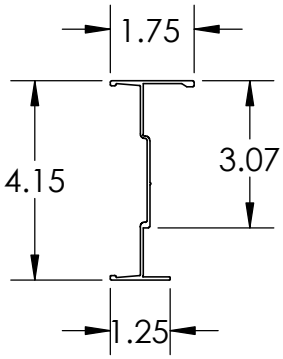

Overall Width: W + 1.5"

Tray Width (W)	Tray Weight * (LBS./FT.)
6	1.51
9	1.58
12	1.66
18	1.81
24	2.12
30	2.31
36	2.50

* Based on 9" rung spacing

- **Material:** Aluminum Alloy 6063-T6
- **Finish:** Plain
- **Bottom:** Ldr: 1" wide I rung
  SB: Flat Sheet over 12" Rung Spacing.
- **Construction:** Welded
- **Tray Design:** Tray construction and markings are per the latest edition of NEMA Standards Publication VE1, CSA C22.2 No. 126.
- **Tray Grounding Capability:** Classified as an equipment grounding conductor per NEC 392.60 with a maximum 1200 ampere rating. UL Cross Sectional area: 1.00 in²
- **Connectors:** Supplied in pairs with hardware. Splice resistance is less than 0.00033 ohms.
- **Mechanical Properties:**
  One rail: Ix-x = 1.418 in⁴, Sx-x = 0.646 in³

SUPPORT SPAN (FT.)																									
6		8		10		12		14		16		18		20		22		24		26		28		30	
SAFE LOAD DATA (LBS./FT.)/ DEFLECTION (IN.) / SAFETY FACTOR 1.5																									
410	0.37	241	0.69	154	1.08	107	1.55	76	2.11	56	2.76														

ITRAY STRAIGHT SECTION CATALOG NUMBERING EXAMPLE:

09-4A12C-S144-06

- **BOTTOM TYPE**
  - **VENTED**
    - **06** – 6" Rung Spacing
    - 09 – 9" Rung Spacing
    - 12 – 12" Rung Spacing
  - **NON-VENTED**
    - **SB** – Solid Bottom
- **RAIL HEIGHT**
  - **4** – 4"
- **MATERIAL**
  - **A**
- **NEMA CLASS**
- **LENGTH***
  - **S120** – 120"
  - S144 – 144"
  - S240 – 240"
- **WIDTH**
  - **06** – 6"
  - 09 – 9"
  - 12 – 12"
  - 18 – 18"
  - 24 – 24"
  - 30 – 30"
  - 36 – 36"

Legrand
8319 State Route 4
Mascoutah, IL 62258 USA
800-658-4641
618-566-3230
Fax 618-566-3250
www.legrand.us/cablofil

Copyright © 2013 Cablofil, Inc.

CABCS1106.C - IT 4A12C