alaterre
FURNITURE

ISOBEL CONSOLE TALE 56

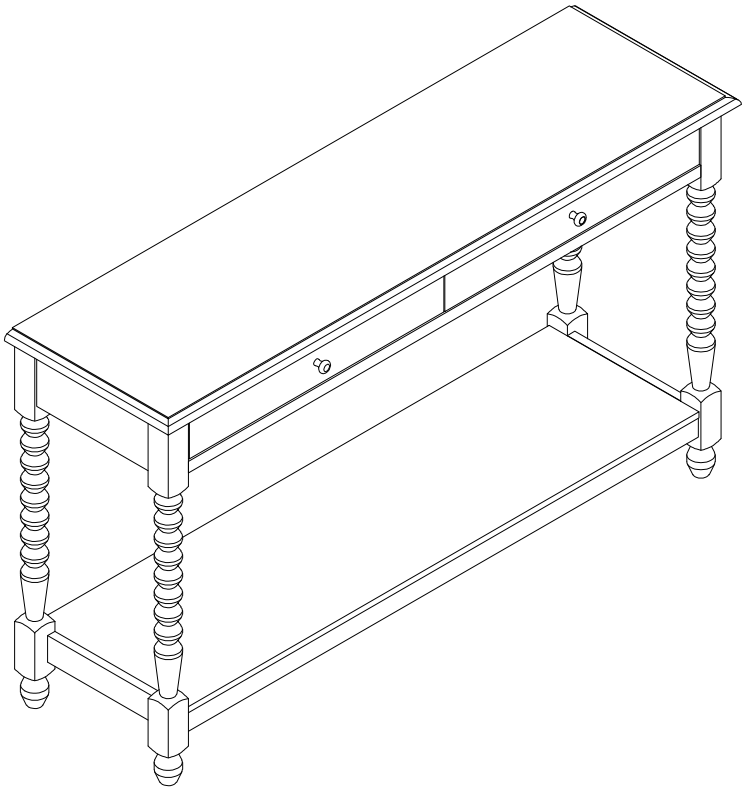

REPLACEMENT PARTS

Please do not contact the company purchased from as we can help you faster.
Order replacement parts and hardware at " www.TeamCustomerService.com "

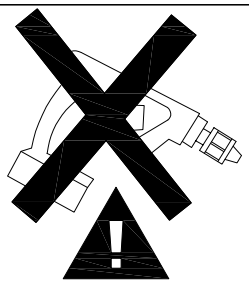

. Use of power tool to assemble this product will invalidate any claim and damage this product making it unsafe !!!
. Please assemble on a clean soft surface to avoid damage.

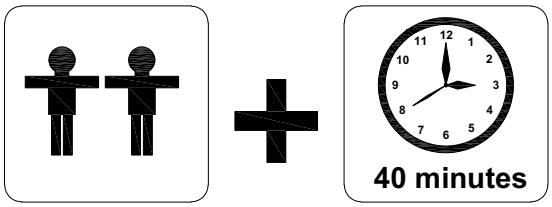

Tools Required

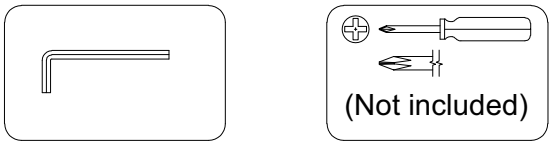

Part list - Isobel Console Table 56

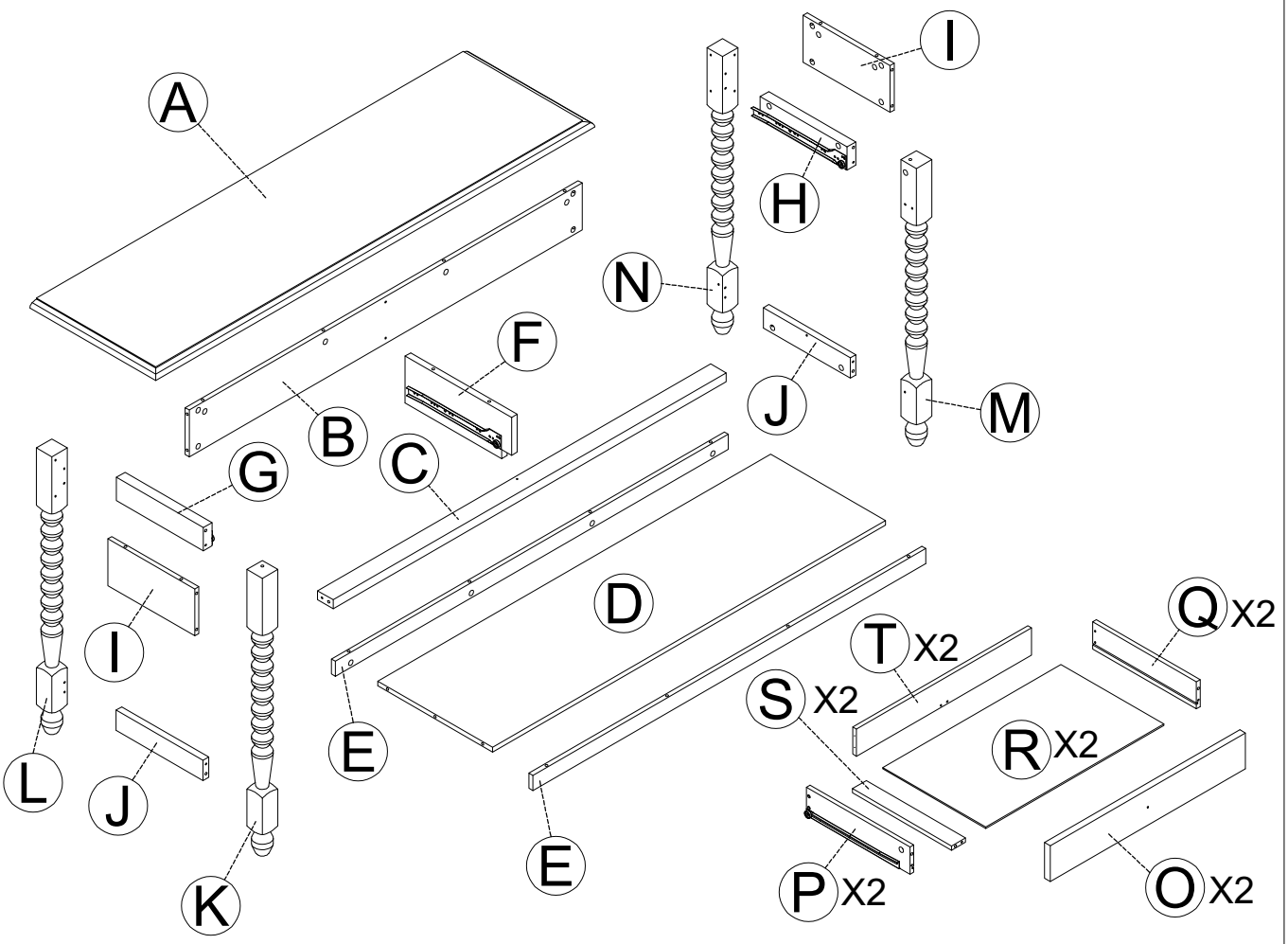

A	1	B	1	C	1	D	1	E	2	F	1	G	1
H	1	I	2	J	2	K	1	L	1	M	1	N	1
O	2	P	2	Q	2	R	2	S	2	T	2		

Identifying the hardware-*Identify the hardware using the illustrations below*

1 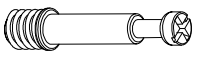 57 Ø6 x 35MM Cam Bridge	2  57 Ø15 x 9MM Cam Head	3 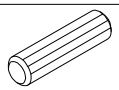 19 Ø6 x 30 Dowel
4  4 Leveler	5  2 Handle	6  2 M4 x 25 Bolt
7  8 M3.5 x 20MM Screw	8  1 Ø10 x 10MM Plastic Nut	9  1 M4 x 45MM Screw

ASSEMBLY DESCRIPTION

STEP 1

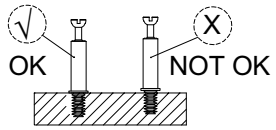

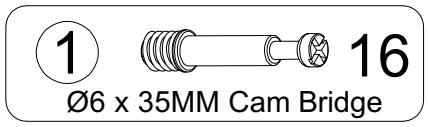

STEP 2

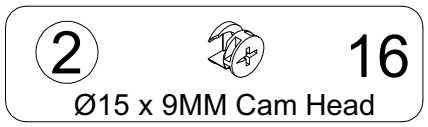

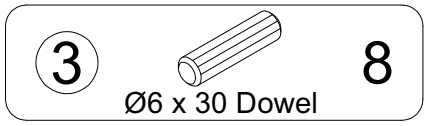

ASSEMBLY DESCRIPTION

STEP 3

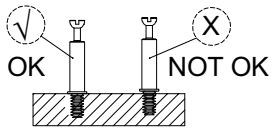

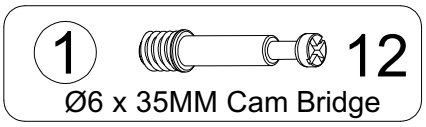

STEP 4

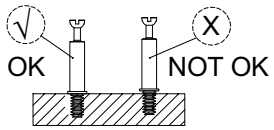

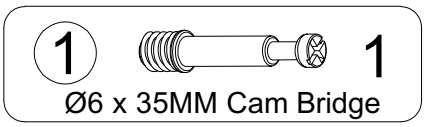

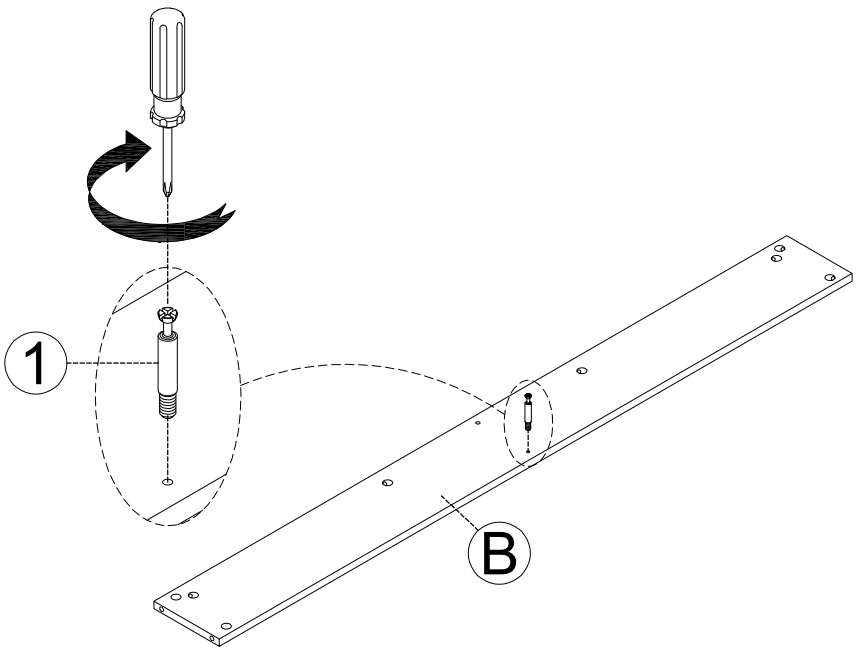

ASSEMBLY DESCRIPTION

STEP 5

2		1
Ø15 x 9MM Cam Head		
8		1
Ø10 x 10MM Plastic Nut		
3	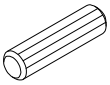	1
Ø6 x 30 Dowel		
9		1
M4 x 45MM Screw		

STEP 6

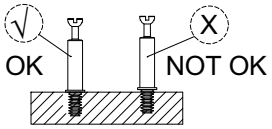

1	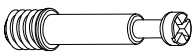	8
Ø6 x 35MM Cam Bridge		

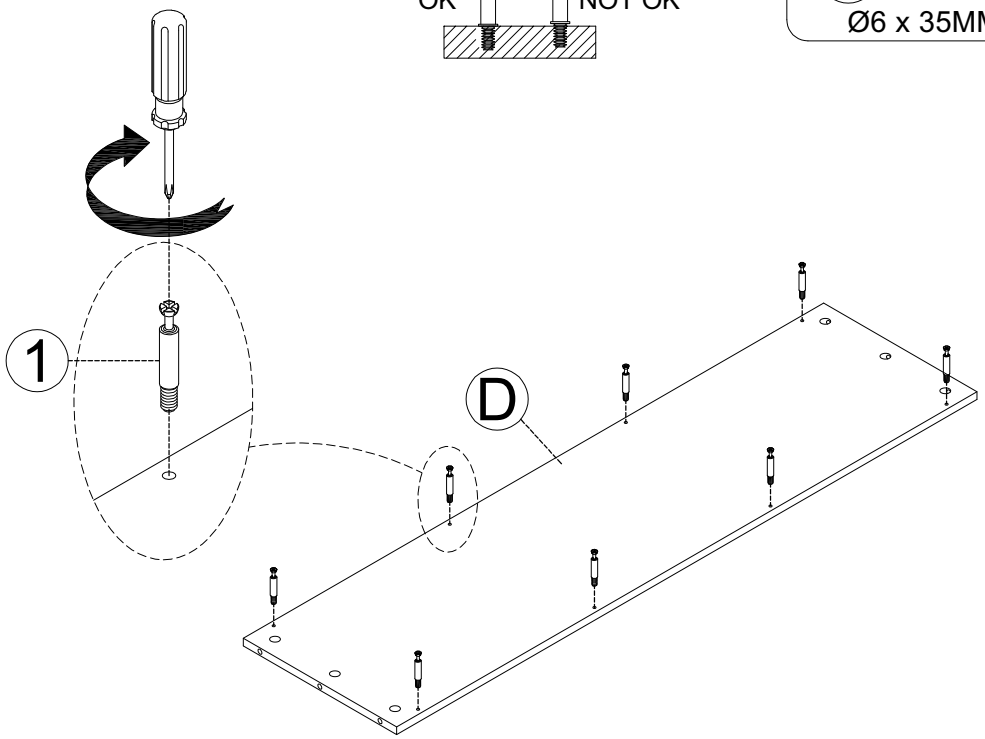

ASSEMBLY DESCRIPTION

STEP 7

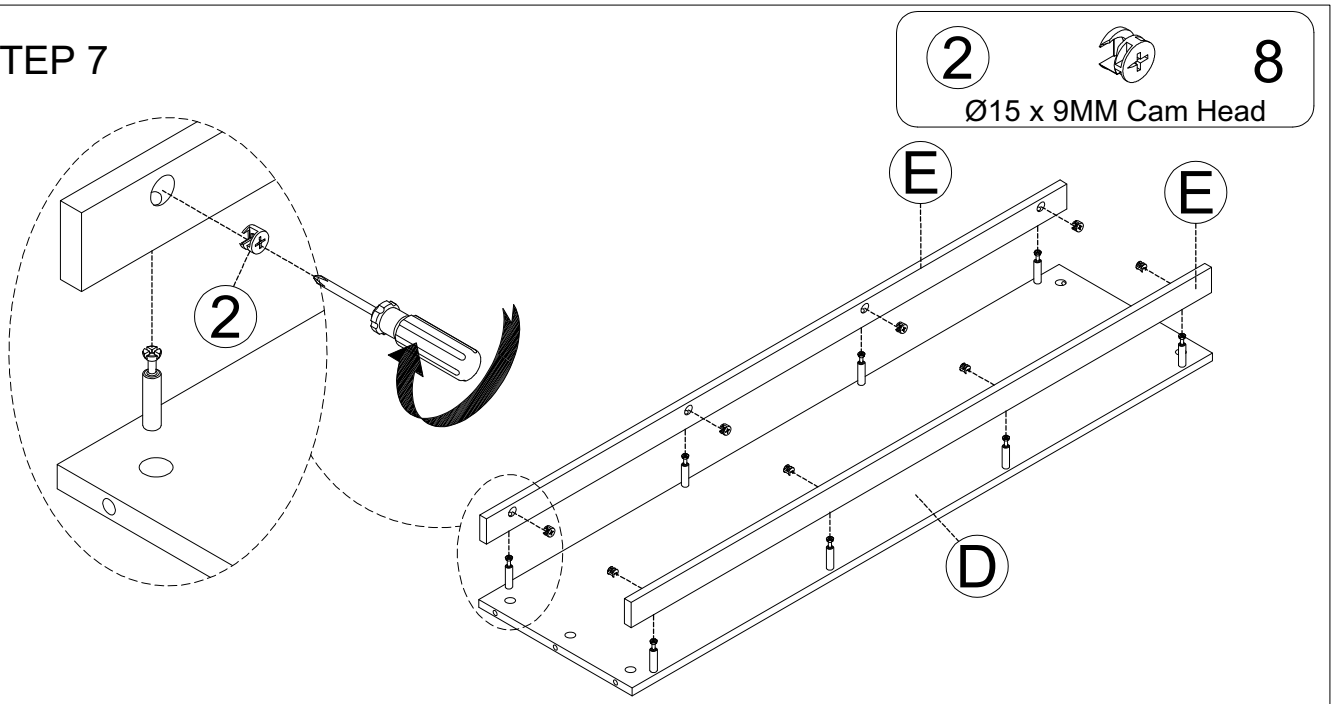

STEP 8

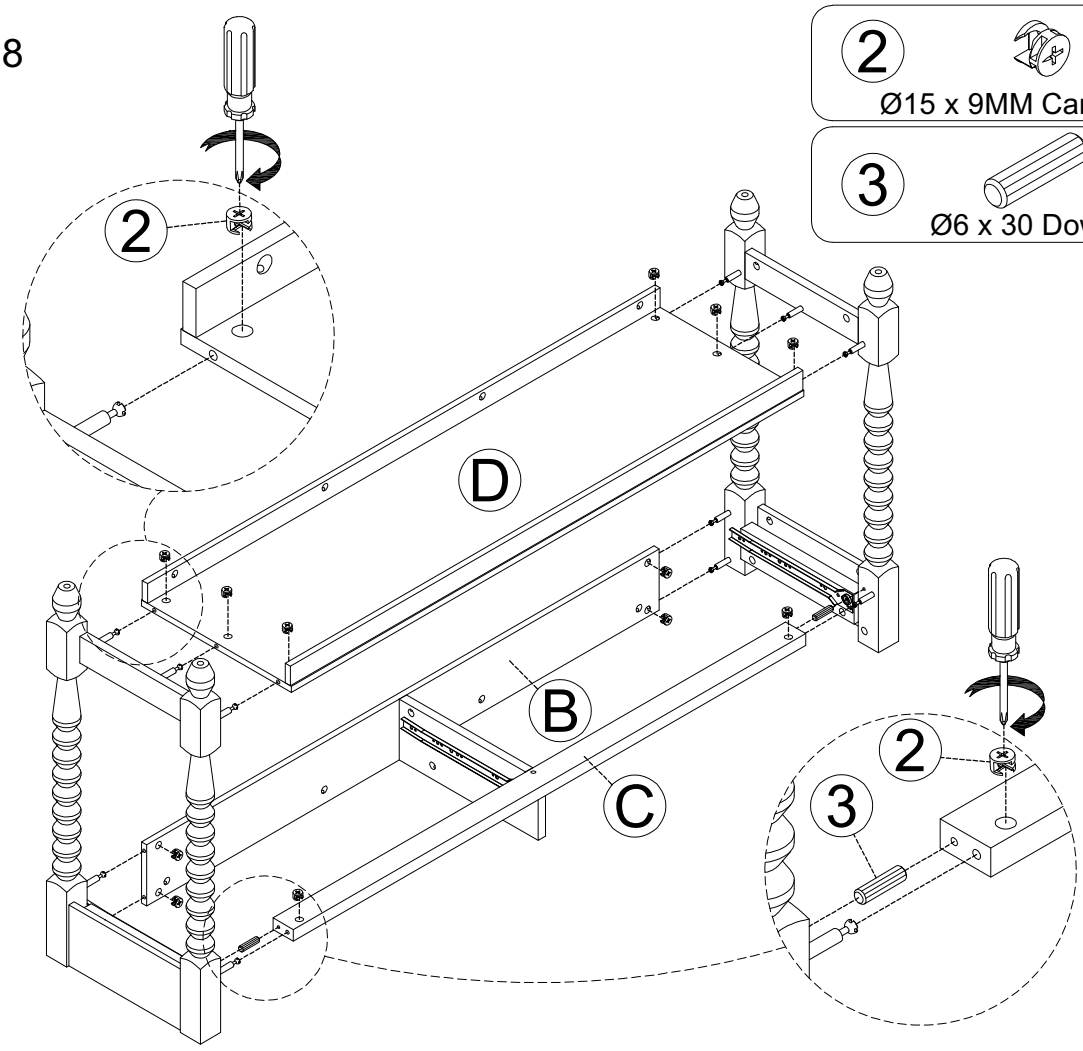

ASSEMBLY DESCRIPTION

STEP 9

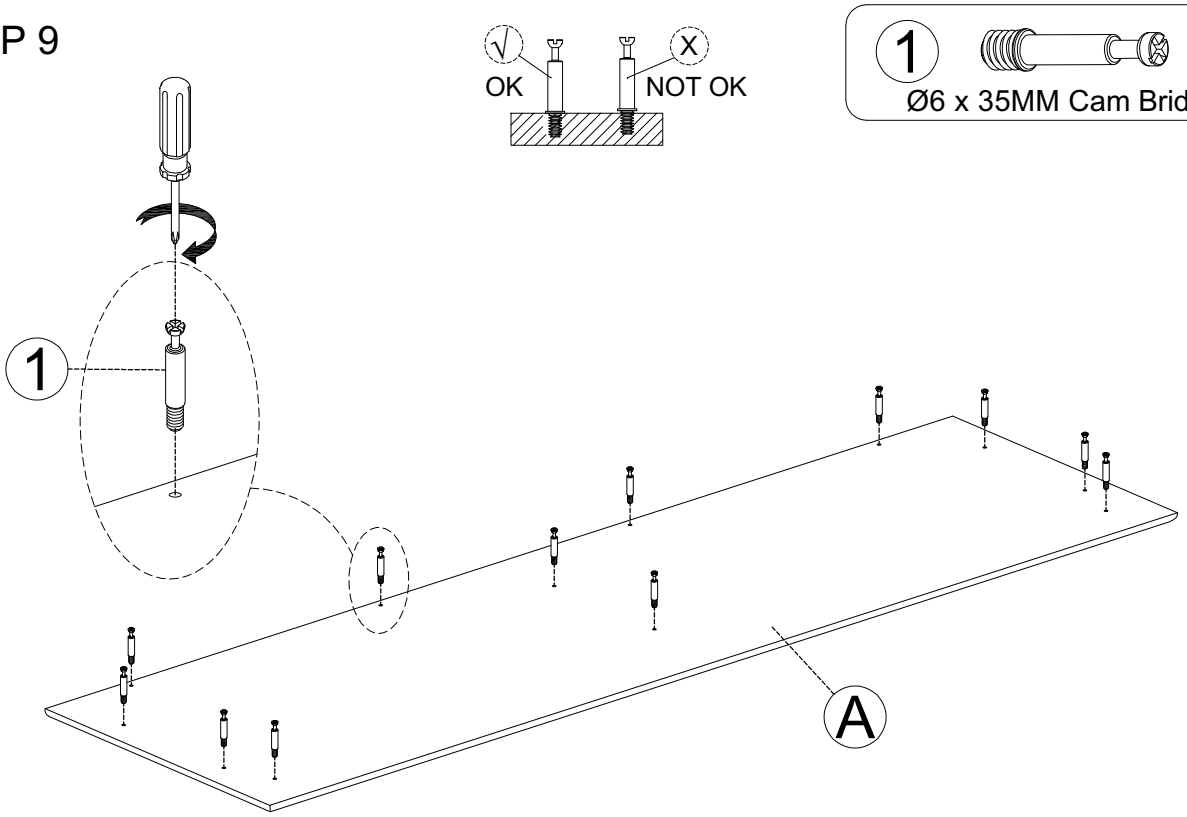

1 12
Ø6 x 35MM Cam Bridge

STEP 10

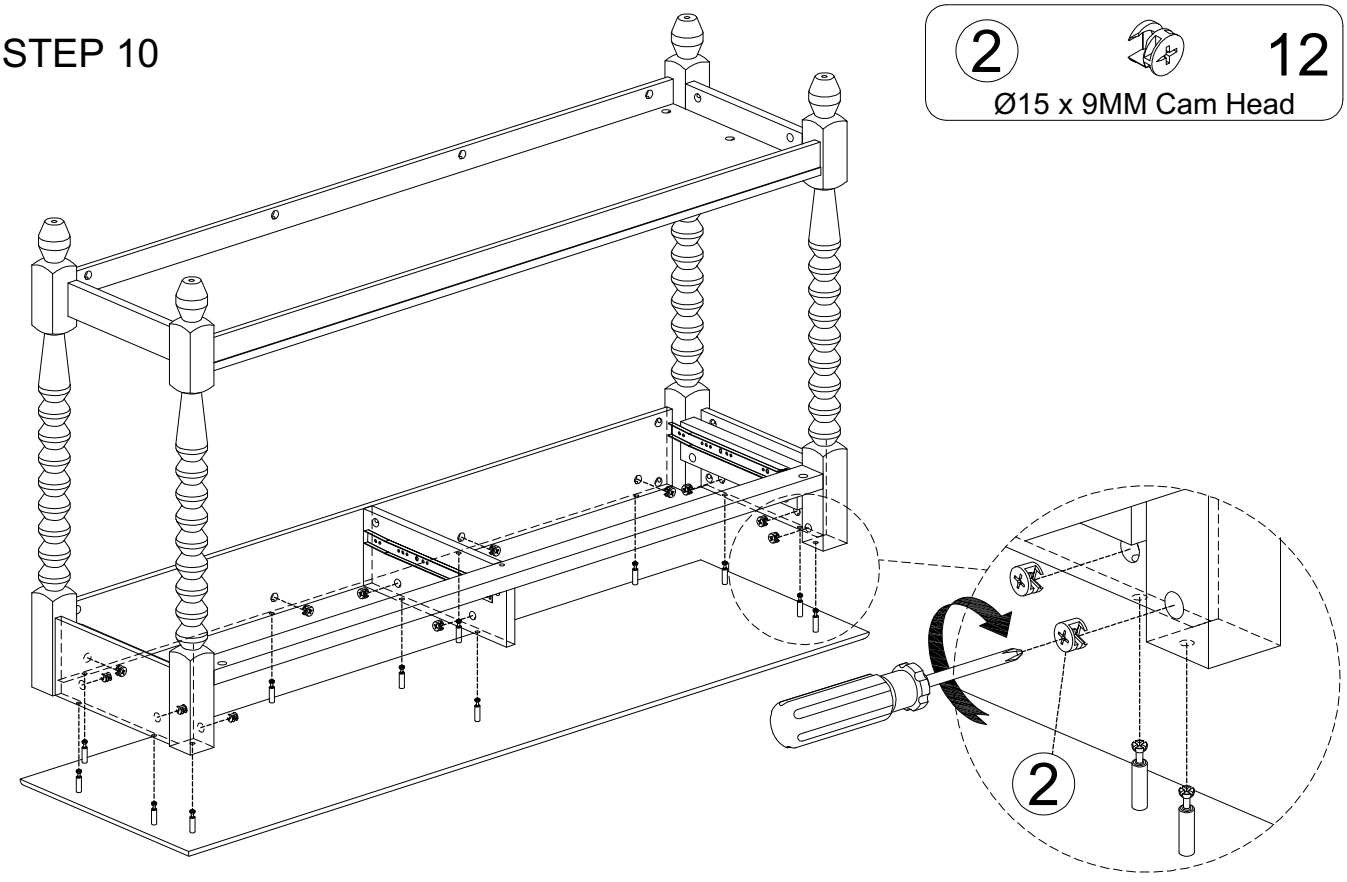

2 12
Ø15 x 9MM Cam Head

ASSEMBLY DESCRIPTION

STEP 11

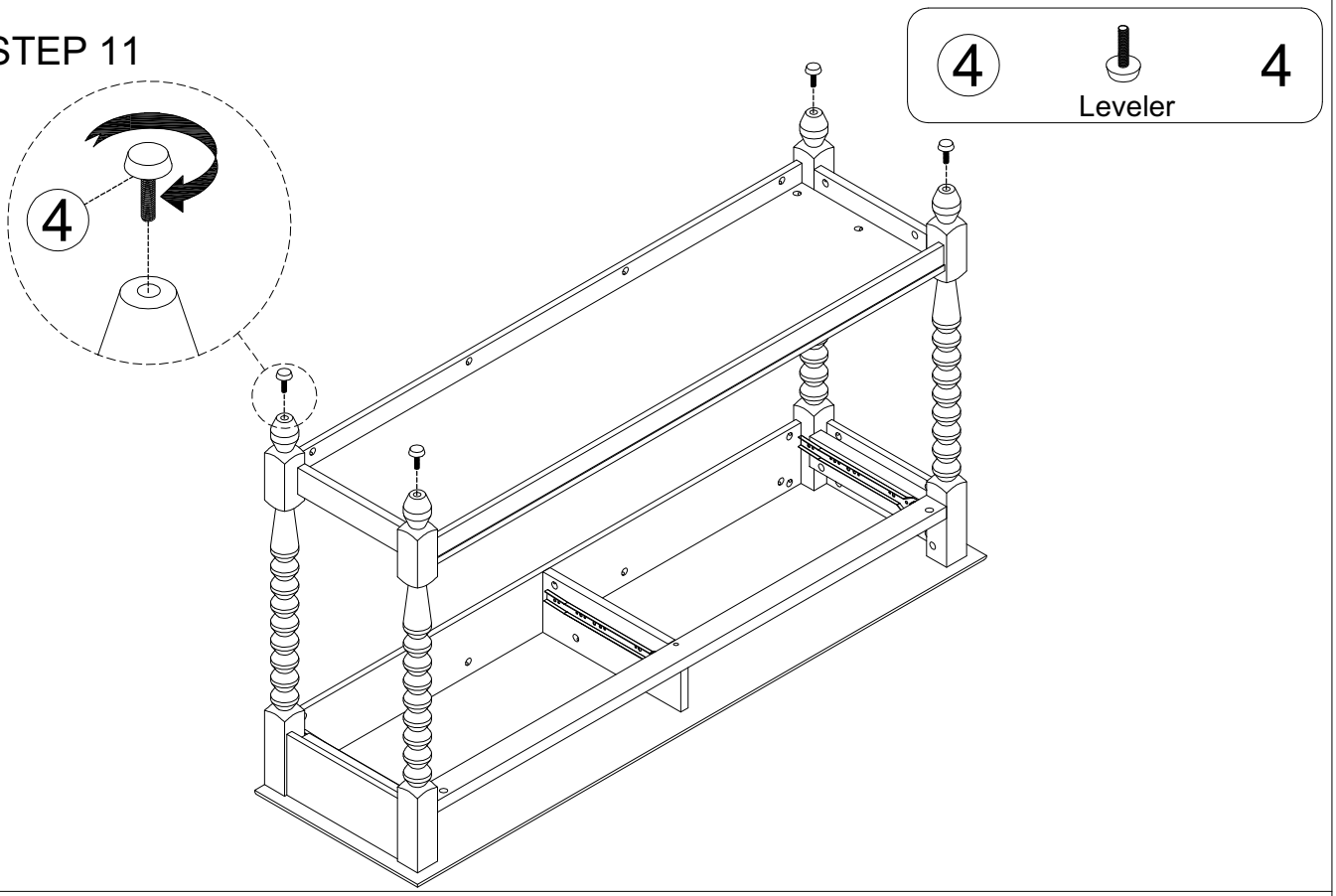

STEP 12

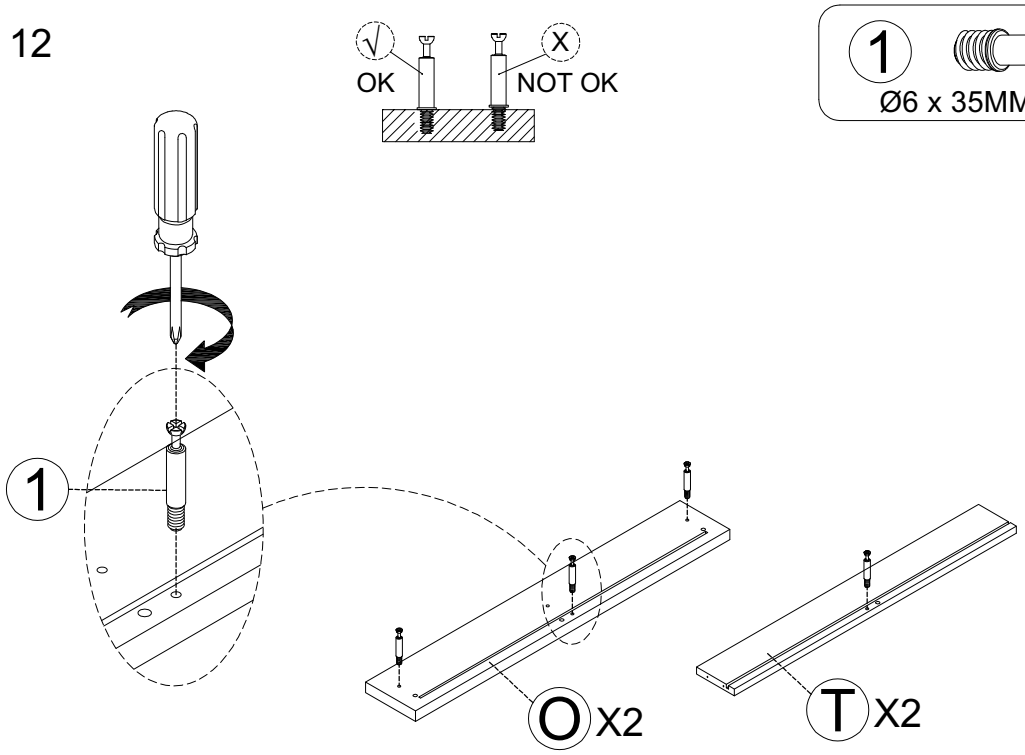

ASSEMBLY DESCRIPTION

STEP 13

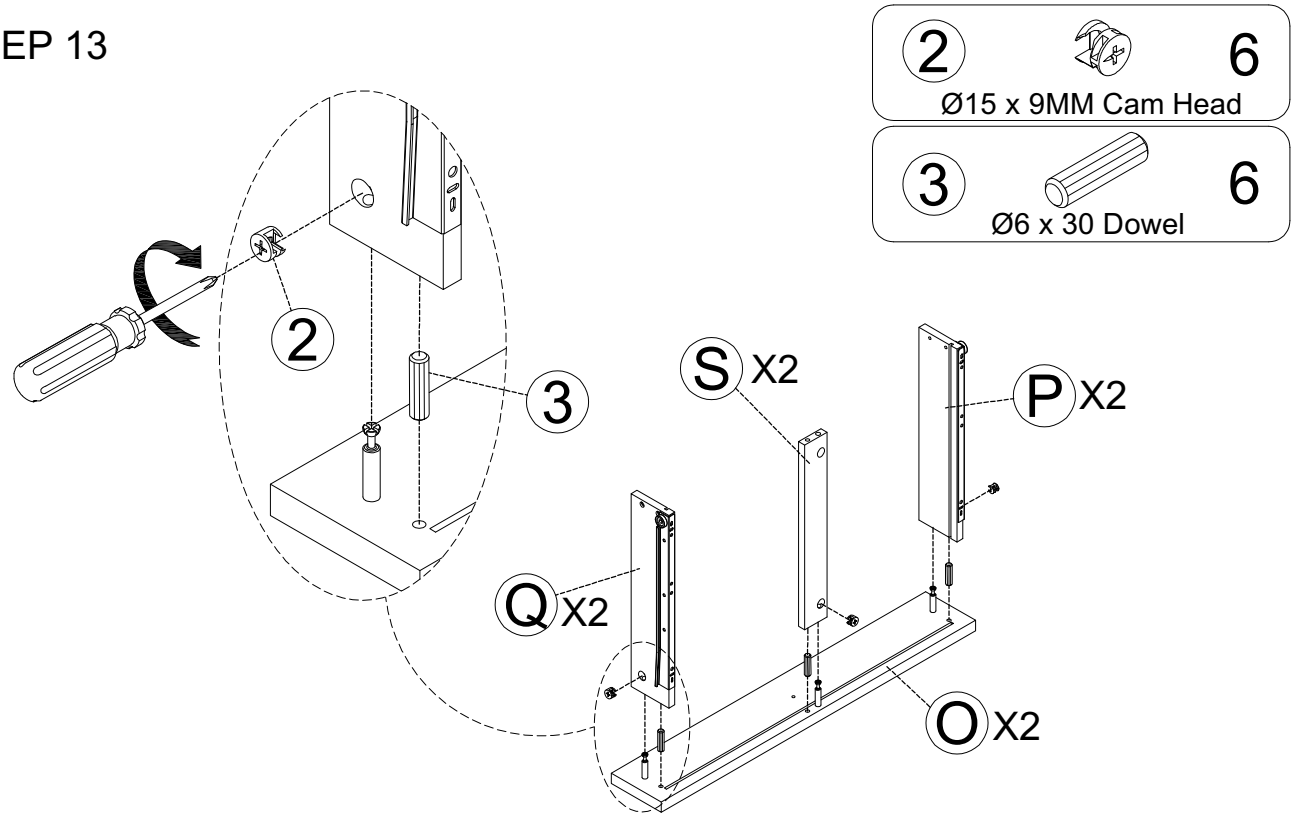

STEP 14

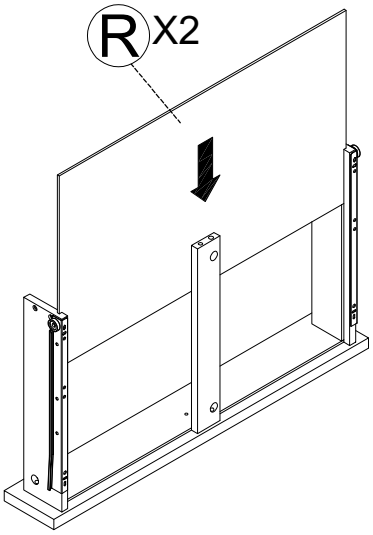

ASSEMBLY DESCRIPTION

STEP 15

2		2
Ø15 x 9MM Cam Head		
3	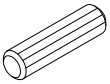	2
Ø6 x 30 Dowel		

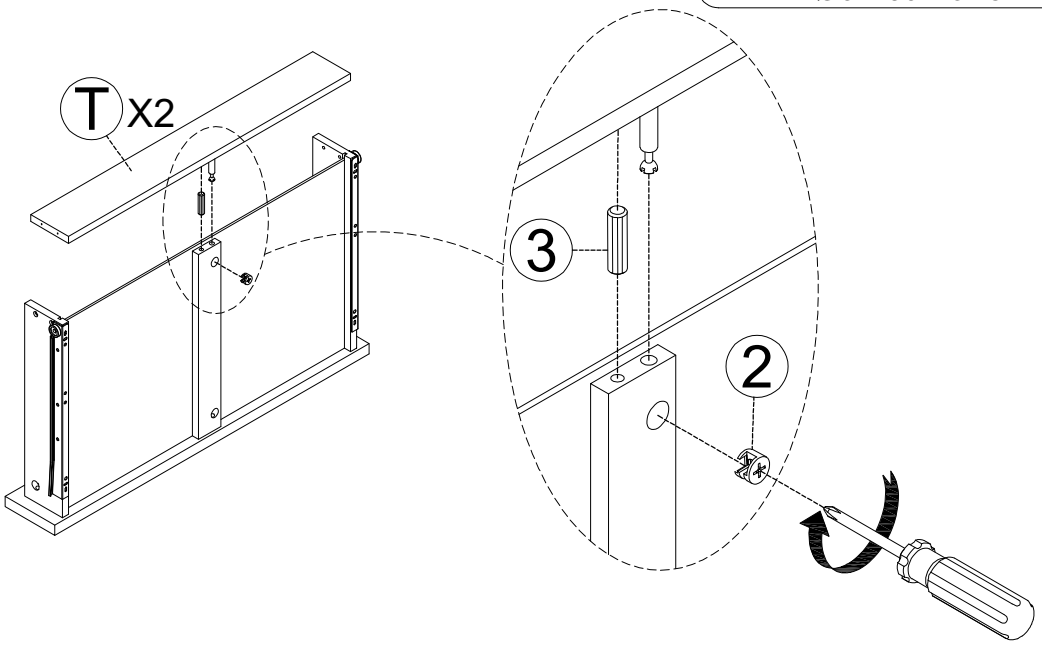

STEP 16

7		8
M3.5 x 20MM Screw		

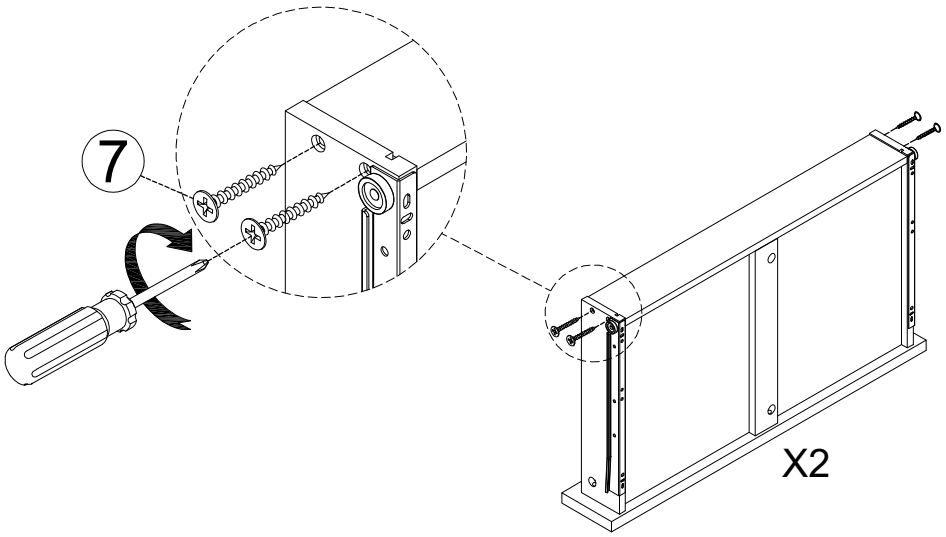

ASSEMBLY DESCRIPTION

STEP 17

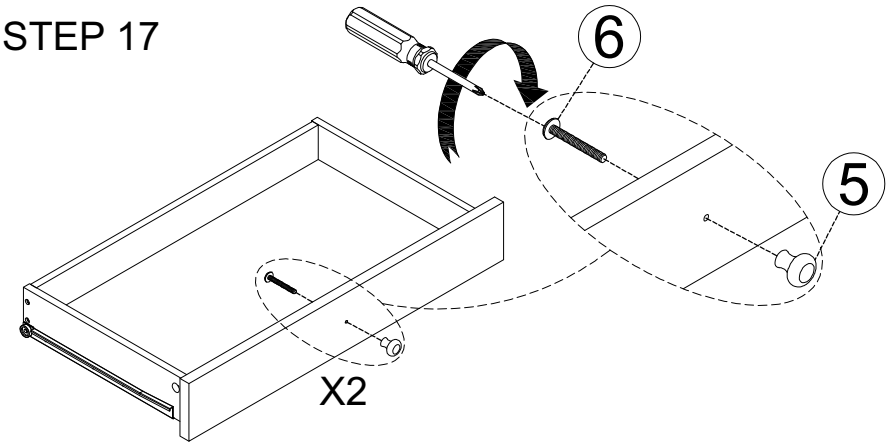

5	Handle	2
6	M4 x 25 Bolt	2

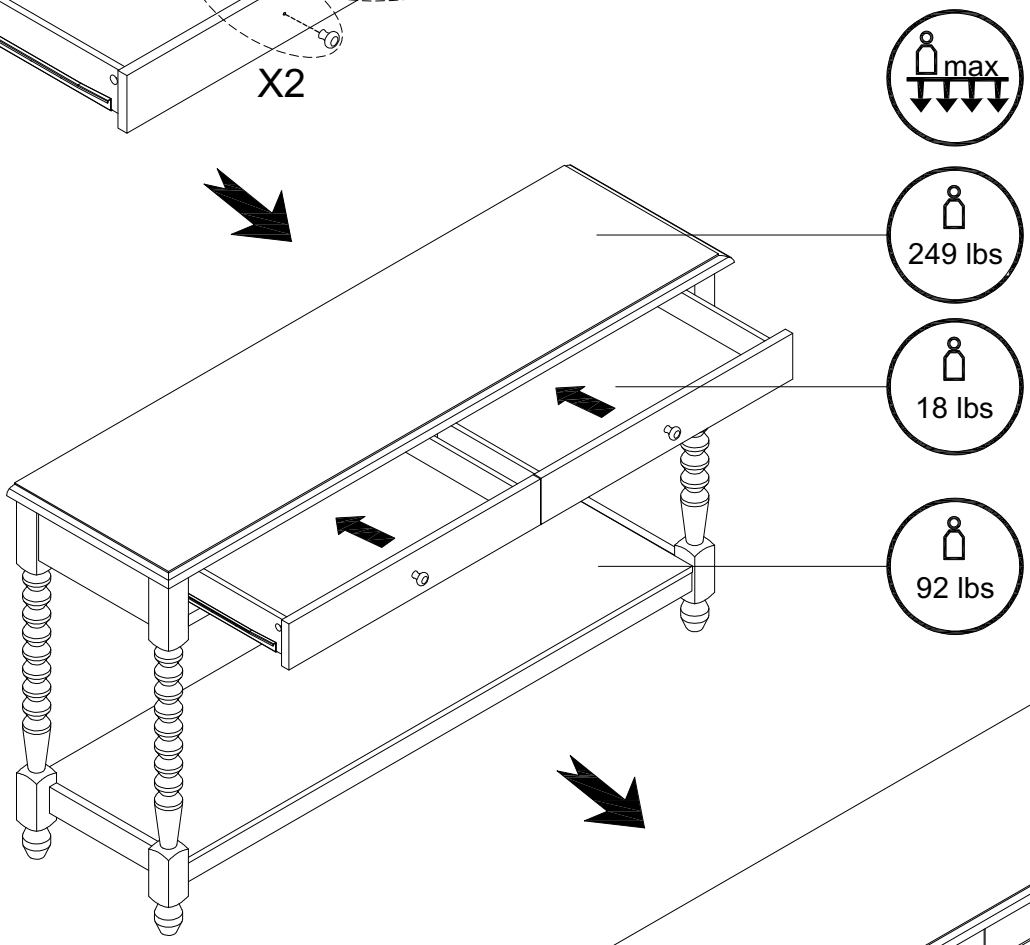

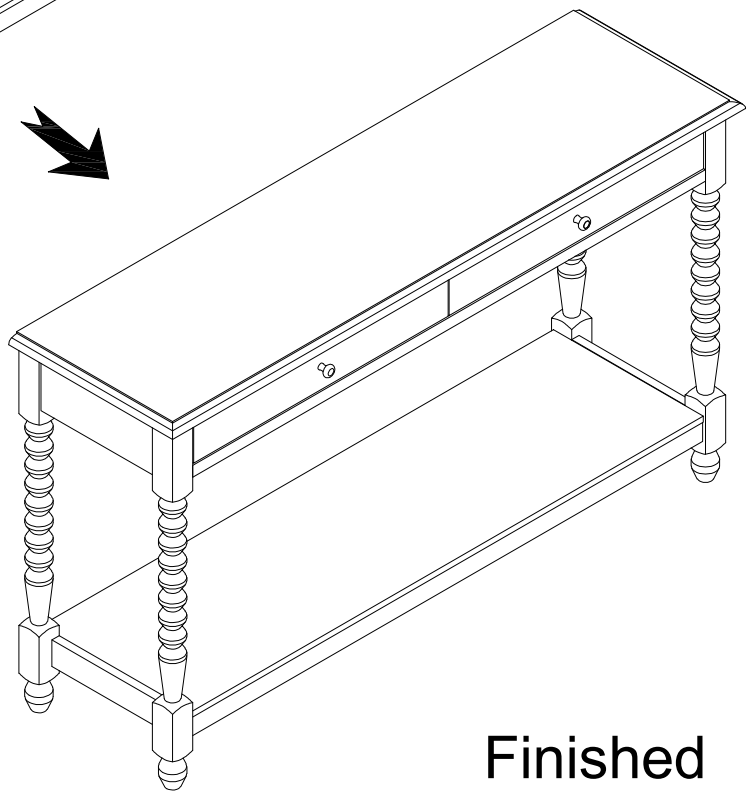

Finished