REVISIONS			
LTR	DESCRIPTION	DATE	BY
A	REMOVED DETAIL A; REMOVED SEVERAL DIMENSIONS AND METRIC DIMS; CAVITY NO. WAS 4002; 2D CHANGES ONLY	26FEB18	MKR
B	OFC WAS 531.00 CC'S; 2D CHANGES ONLY	26FEB18	MKR

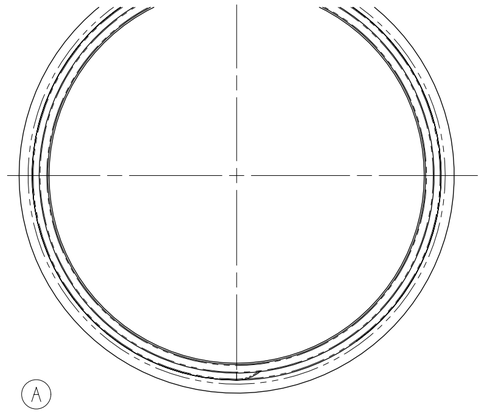

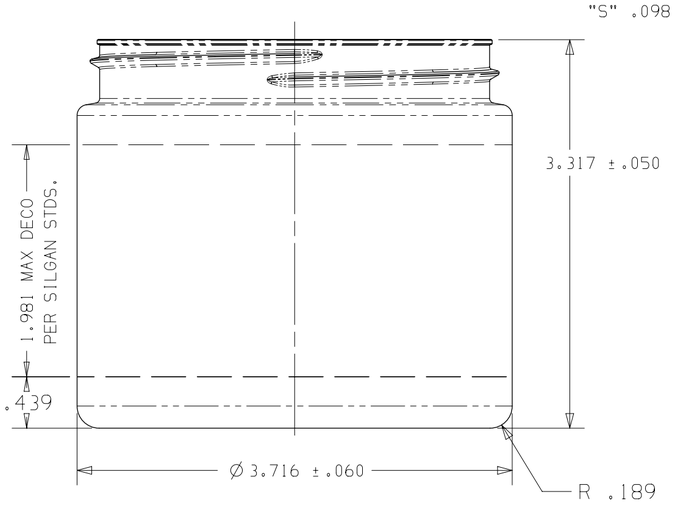

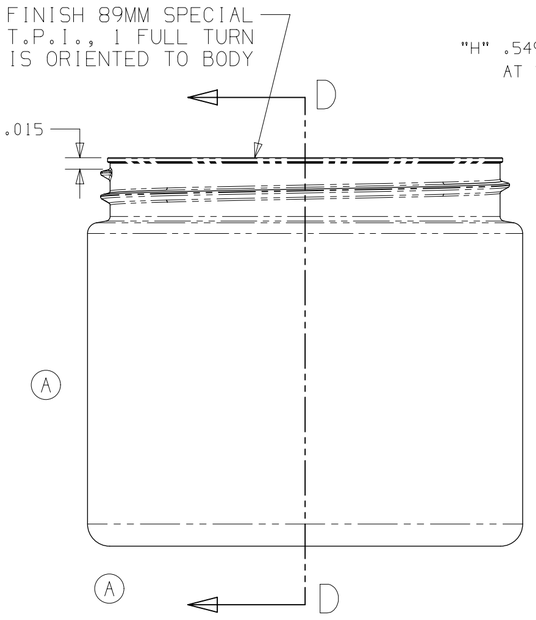

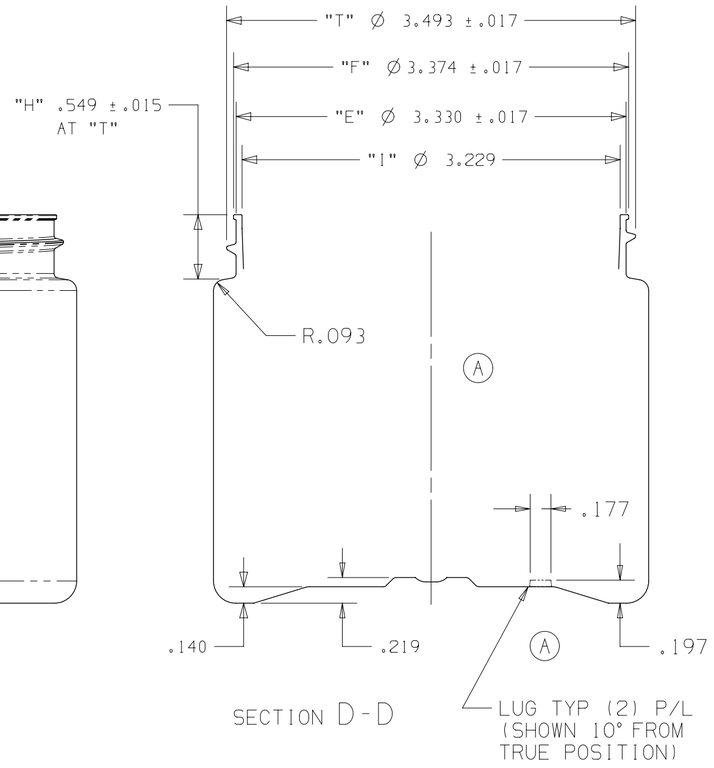

SECTION D-D



SCALE 3:4

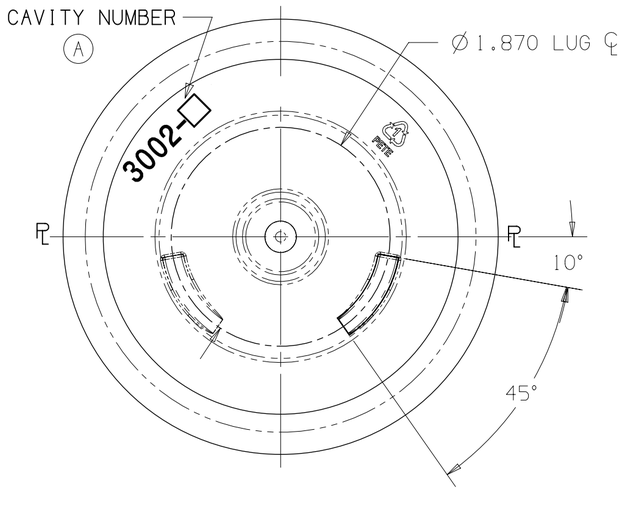

NOTES :

(B) 1) OVERFLOW CAPACITY : 17.70 ± .24 FL.OZ.
(523.40 ± 7.0 ML)

2) WEIGHT : 34.5 ± 1.5 GRAMS

TEMPORARY DRAWING

THIS IS A SUGGESTED DESIGN THEME FOR CUSTOMER APPROVAL AND COMMENTS. FINAL SIZE AND SPECIFICATIONS TO BE DETERMINED AFTER THE PRODUCT IS MANUFACTURED.

CODE CHART	
1	OOM 45623
2	OOM 45624
3	ZOM 45625
4	ZOM 45626
5	WOM 45627
6	ZOM 45628

DIMENSIONS SHOWN ARE:

☒ AS MOLDED ☐ AFTER TREAT

☐ AFTER TREAT & DECO

DRAWN BY M. ROBINSON	MATERIAL PETE
DATE 23MAR17	PREFORM --
DWG.SIZE C	LABEL DWG. NO. --
INFO. A	
	TOOLING NO. 10109
CAD NX10	CODE
SCALE FULL	BLOWN AREA 44.350 IN^2

Ref No:
DWG-Q1478

DESCRIPTION

16 OZ AMBER PET WIDE MOUTH
JAR 89-400 @210 34.5 GRAM

DISTRIBUTED BY: Pipeline Packaging