19L / 5 GALLON



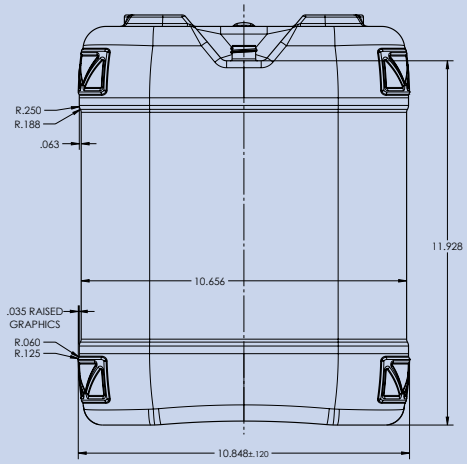

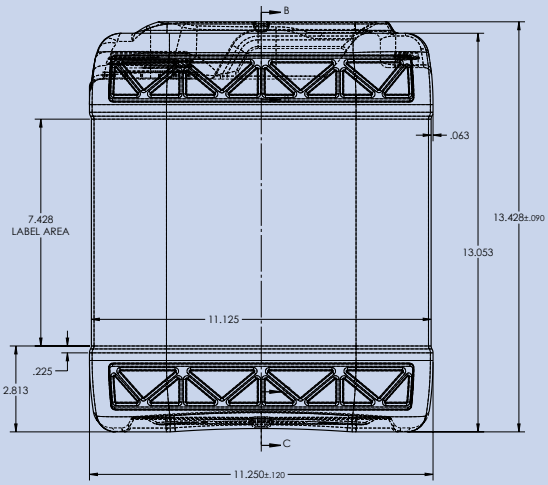

APPLICATIONS

Industrial chemicals, agricultural chemicals, food and flavorings, coatings, adhesives, janitorial and sanitation, vehicle care and other applications

FEATURES

- All container sizes and neck finishes meet UN 3H1 standards
- Meets FDA requirements for food contact, BPA-free & Kosher
- Fluorination is available upon request
- A variety of colors are available to choose (additional costs may apply)
- Reconditionable and recyclable

OPTIONS

Neck Sizes

- 70mm 6TPI
- 63mm Crimp
- 61mm
- 2” Internal Buttress

Vent Options (22mm)

- Open vent stem
- Closed vent stem
- No vent stem

Handle Options

- Integrated/Fixed
- Swing/Flip



SPECIFICATIONS

Material	**HDPE**
Nominal Volume	**19L / 5 Gal**
Overflow Volume	**20.0L / 5.3 Gal**
Dimensions (LxWxH)	**11.25” X 10.84” X 13.42”**
UN	**Regulated**
FDA	**Resin meets FDA standards**

SHIPPING

Quantity per pallet	**112 (48/64)**
53’ Truckload (swing door)	**3,136 (28 pallets)**
Pallet Dimensions	**40 x 48**

DISCLAIMER
This specification does not relieve the customer of their ultimate responsibility for the determination of the appropriate container. It is the customer's responsibility to select the appropriate packaging based upon all information at their disposal including the specific application, regulatory compliance, product compatibility and shipping requirements. WE HEREBY DISCLAIM AND EXCLUDE ANY EXPRESS OR IMPLIED WARRANTIES, INCLUDING WITHOUT LIMITATION THE IMPLIED WARRANTIES OF MERCHANTABILITY AND FITNESS FOR A PARTICULAR PURPOSE.

DISTRIBUTED BY: Pipeline Packaging

REF NO.: DWG-Q1484

DESCRIPTION:5 GAL WHITE HDPE SQUARE TH PAIL 3H1/Y1.8/100 @48/48 70MM 1200G HEAVYWEIGHT, TE 6 TPI CLOSED VENT 22MM CAP INSTALLED