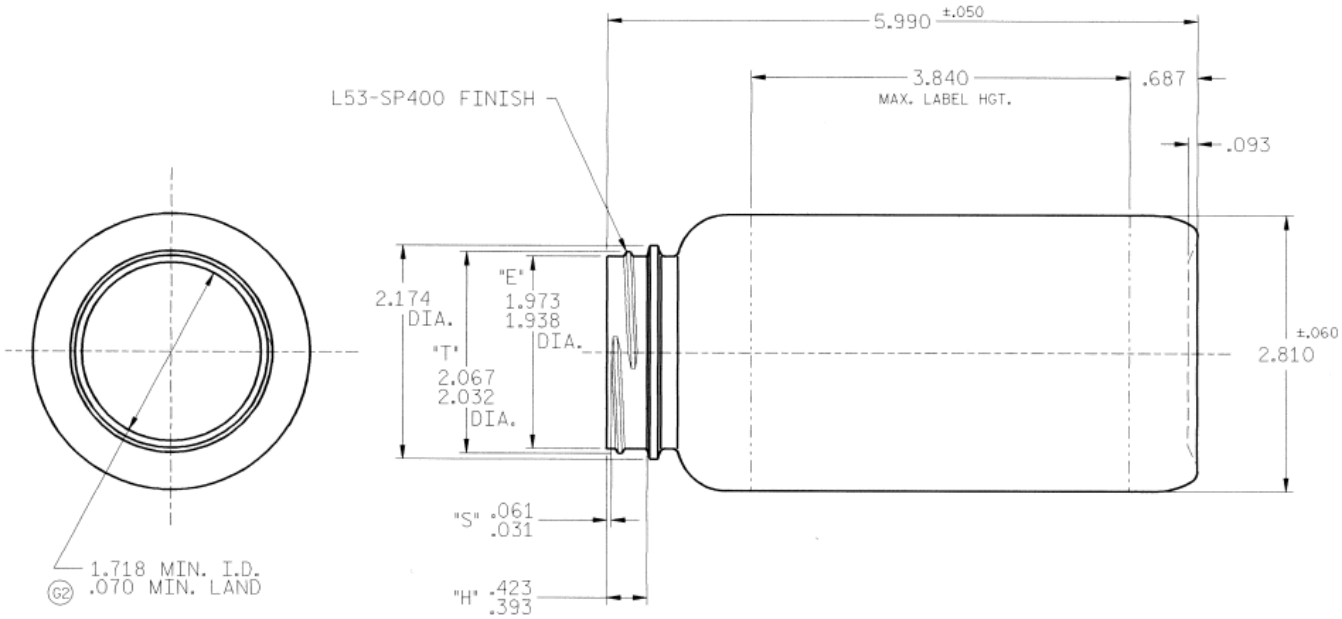

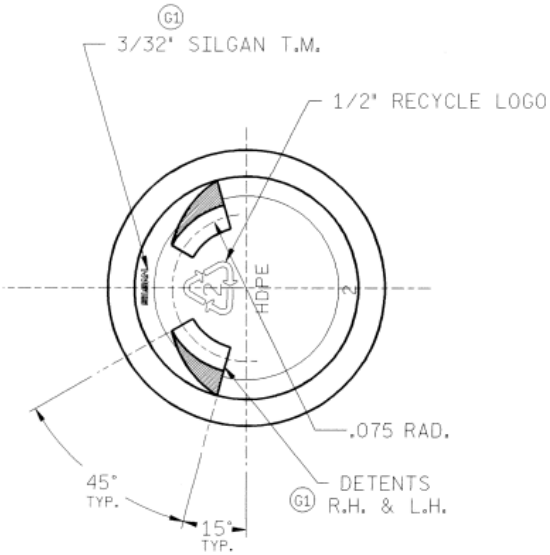

J NOTES :

1) OVERFLOW CAPACITY : 17.73 ± .37 FL.OZ. (524.3 ± 11.0 CC'S.)

2) WEIGHT : 32.0 ± 2.0 GRAMS

3) TREAT SEALING LAND ON FINISH

4) VERTICAL LABEL BREAK :
SCREEN PROCESS : .812
HEAT TRANSFER : .375
PAPER LABEL : NONE

G3

DISCLAIMER THIS INFORMATION IS PROVIDED AS A GENERAL GUIDE, INCLUDING DIMENSIONS. IT IS THE CUSTOMER'S RESPONSIBILITIES TO SELECT THE PROPER CONTAINER FOR PRODUCT AND APPLICATION COMPATIBILITY.	DISTRIBUTED BY: Pipeline Packaging	REF NO.: DWG30770
	DESCRIPTION: 500 cc HDPE Wide Mouth Packer, 53-400, 32 Gram	