alaterre
FURNITURE

ANTON CONSOLE TALE 36

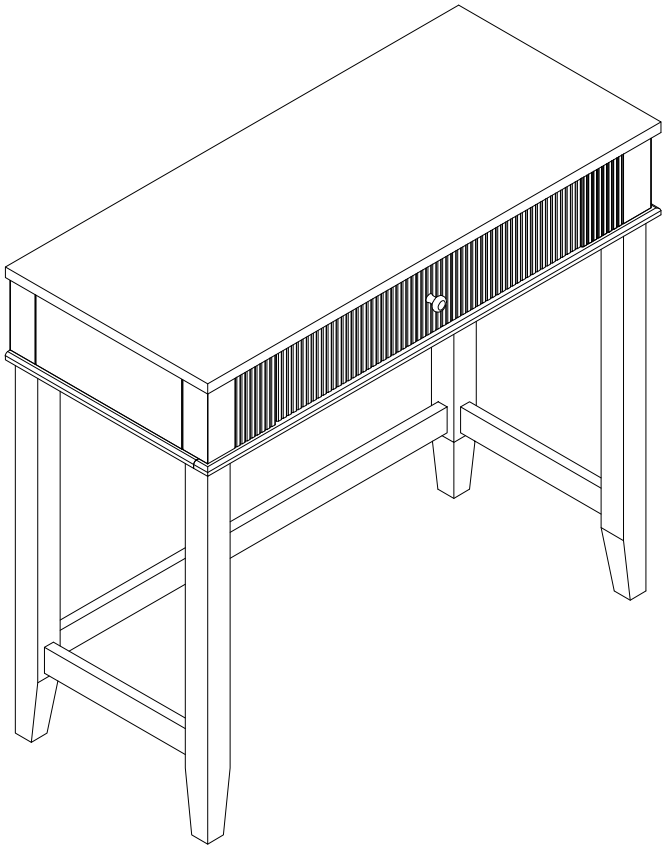

REPLACEMENT PARTS

Please do not contact the company purchased from as we can help you faster.
Order replacement parts and hardware at " www.TeamCustomerService.com "

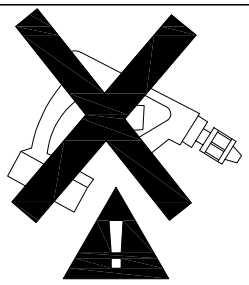

. Use of power tool to assemble this product will invalidate any claim and damage this product making it unsafe !!!
. Please assemble on a clean soft surface to avoid damage.

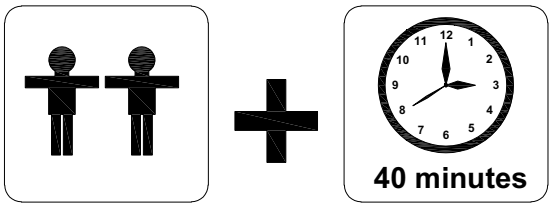

Tools Required

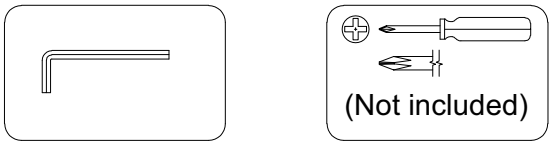

Part list - Anton Console Table 36

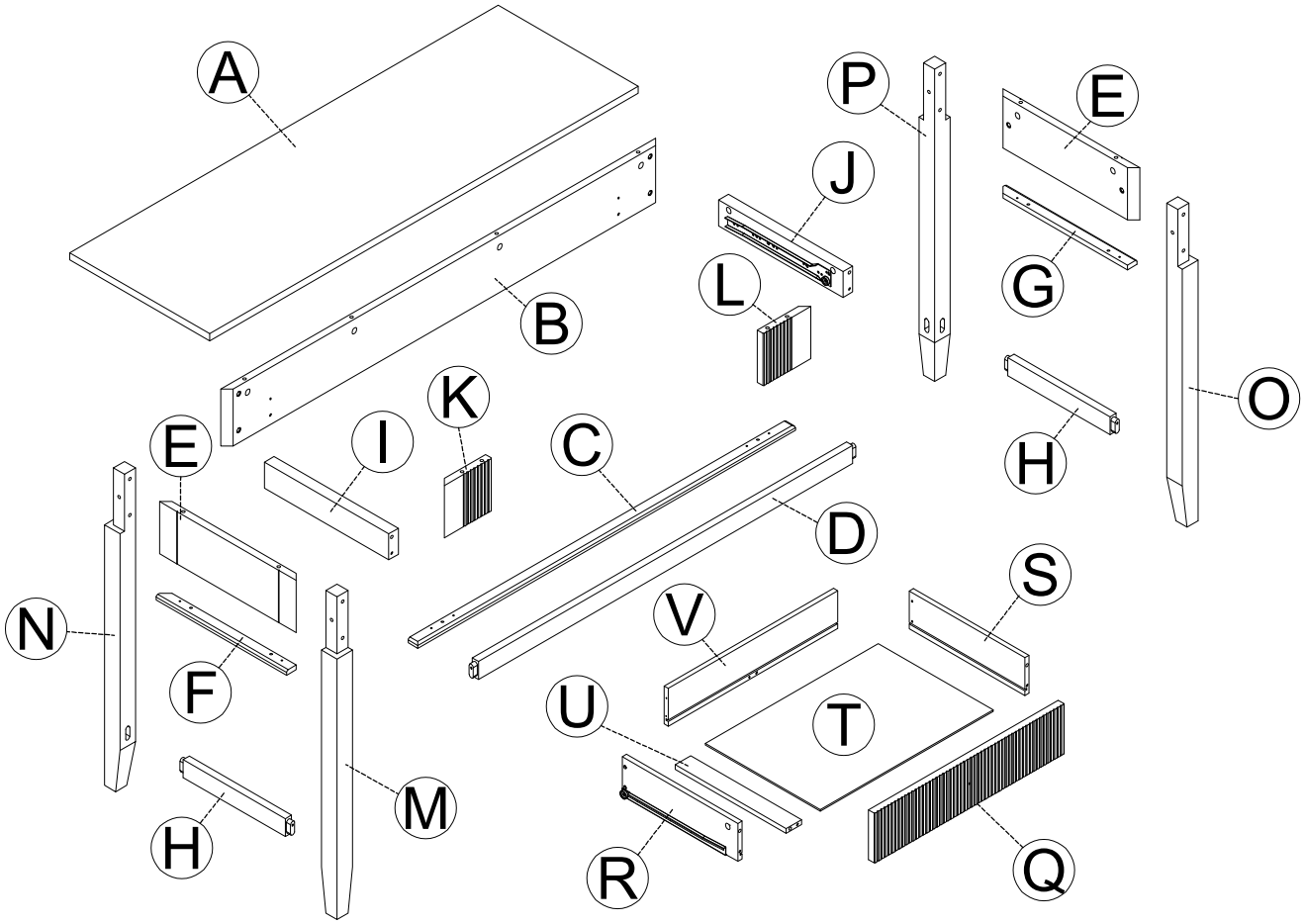

A	1	B	1	C	1	D	1	E	2	F	1	G	1	H	2
I	1	J	1	K	1	L	1	M	1	N	1	O	1	P	1
Q	1	R	1	S	1	T	1	U	1	V	1				

Identifying the hardware-*Identify the hardware using the illustrations below*

1 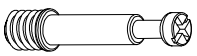 20
Ø6 x 35MM Cam Bridge

2  20
Ø15 x 9MM Cam Head

3 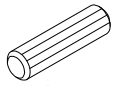 14
Ø6 x 30 Dowel

4  4
Leveler

5  1
Handle

6  1
M4 x 25 Bolt

7  4
M3.5 x 20MM Screw

8  8
M4 x 30MM Screw

9  6
M4 x 45MM Screw

10  12
M6 x 45 Bolt

11  1
ALLEN KEY

ASSEMBLY DESCRIPTION

STEP 1

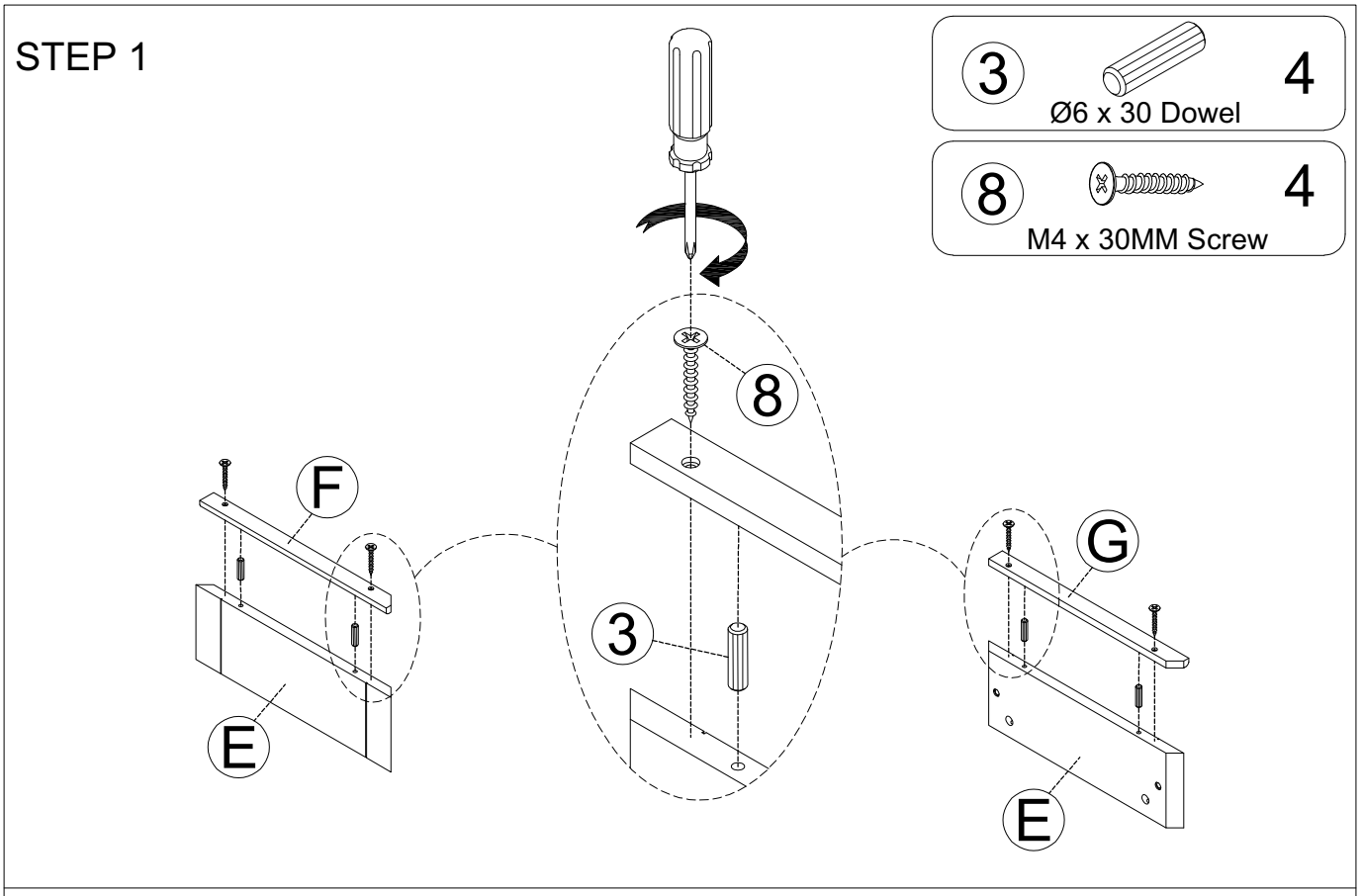

STEP 2

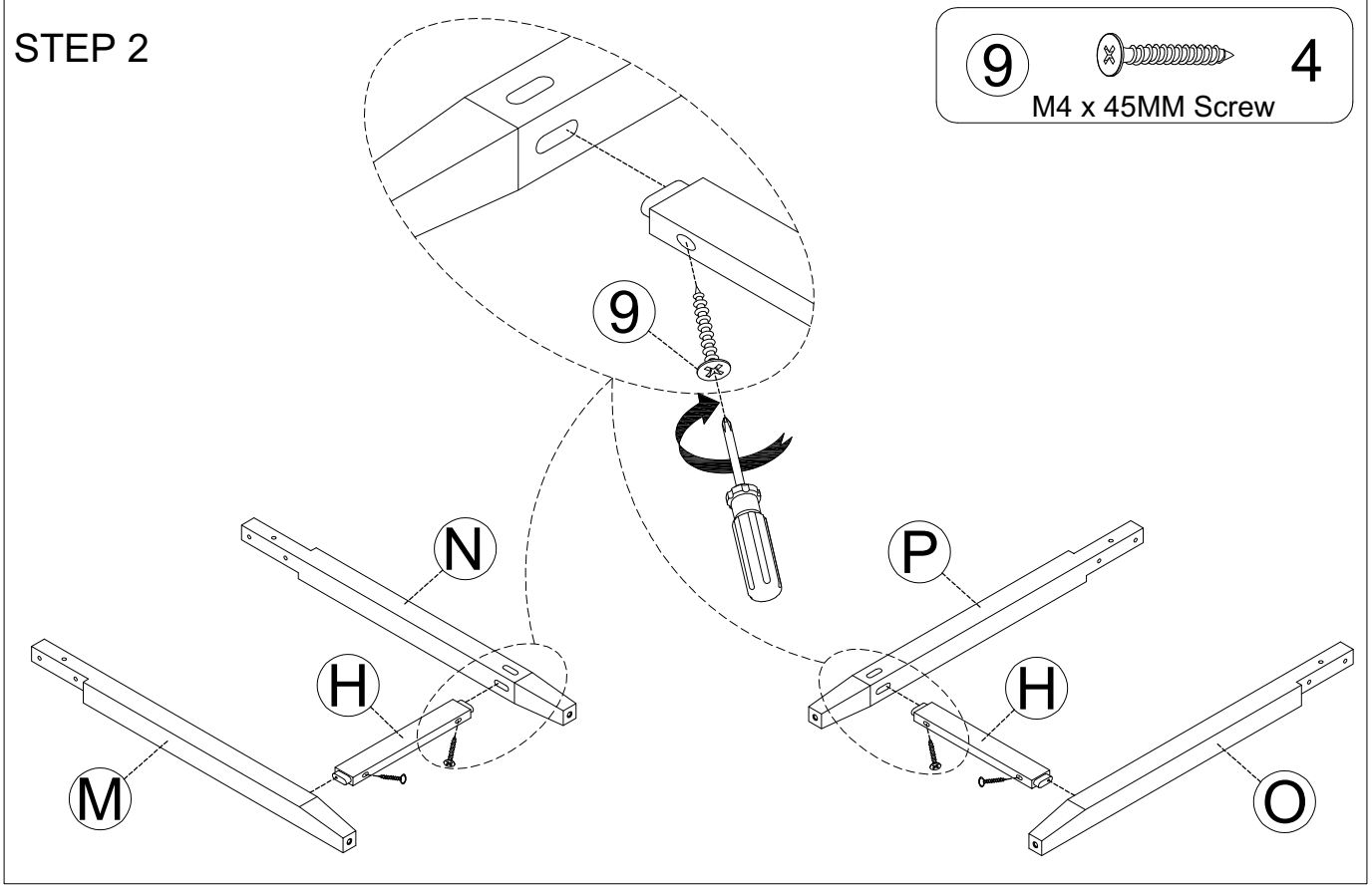

ASSEMBLY DESCRIPTION

STEP 3

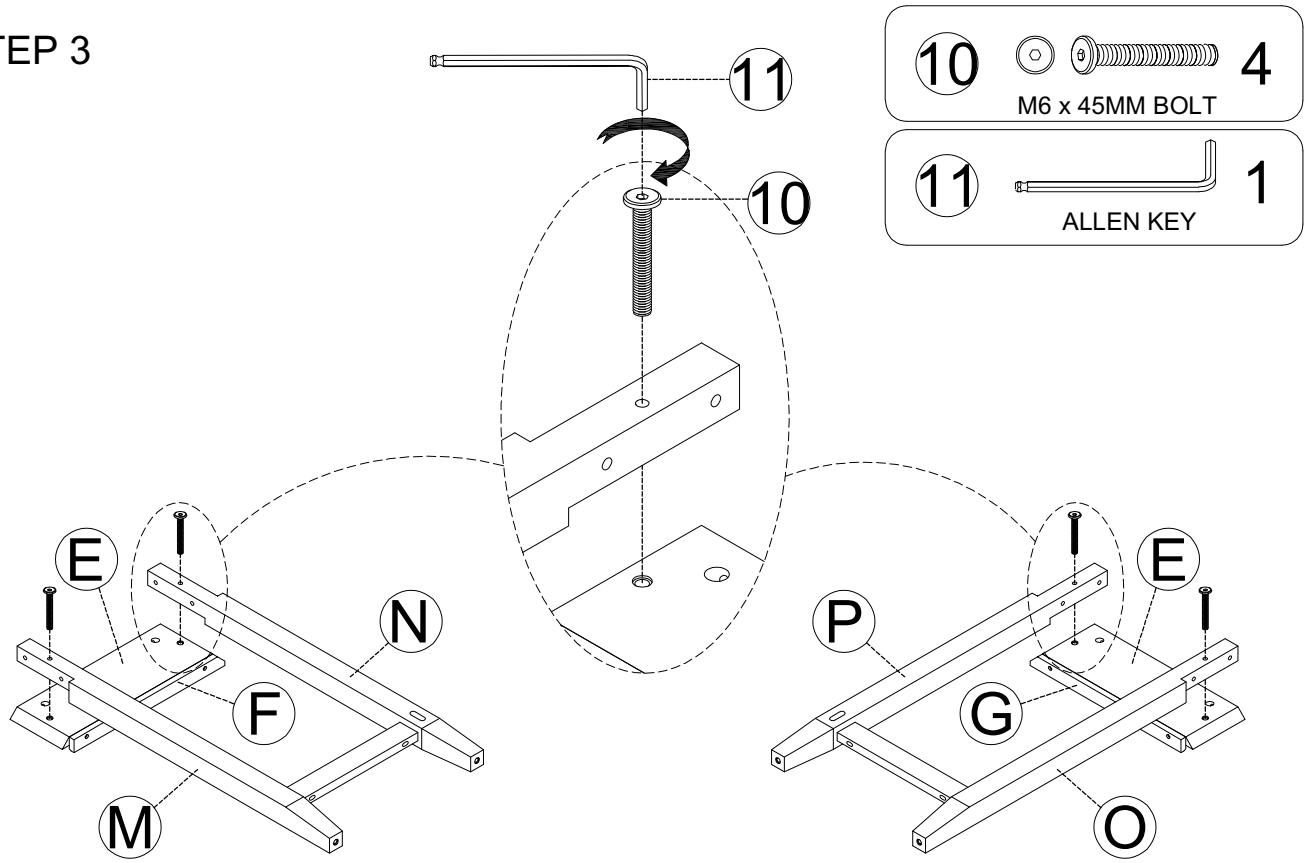

10 — 4
M6 x 45MM BOLT

11 — 1
ALLEN KEY

STEP 4

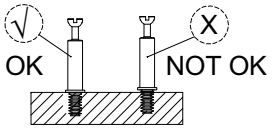

1 — 4
Ø6 x 35MM Cam Bridge

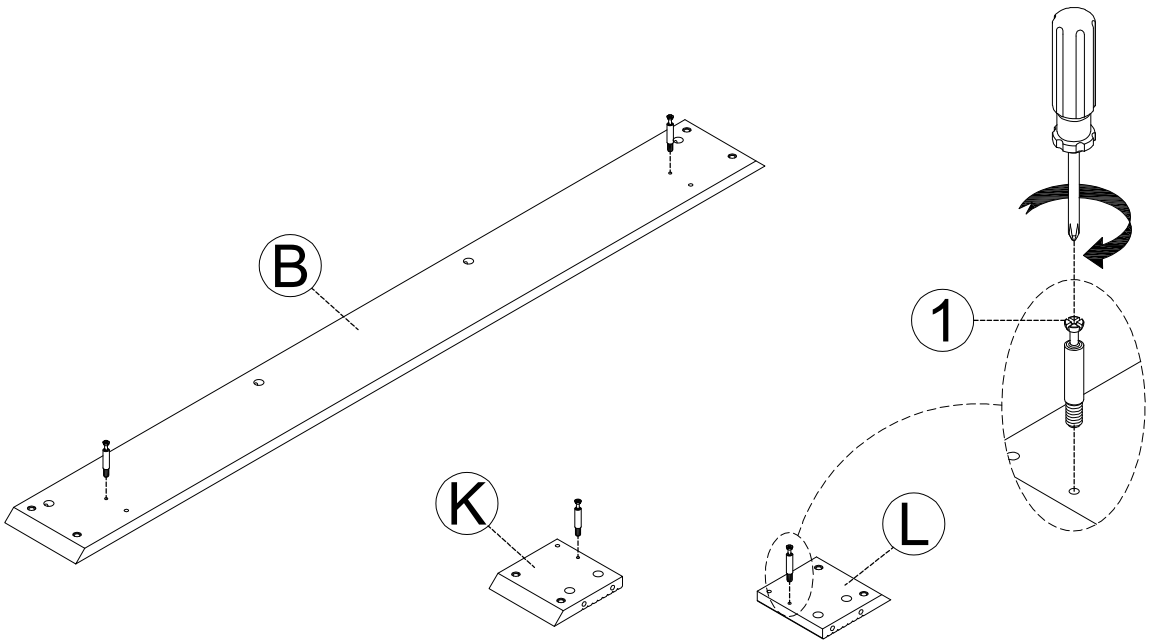

ASSEMBLY DESCRIPTION

STEP 5

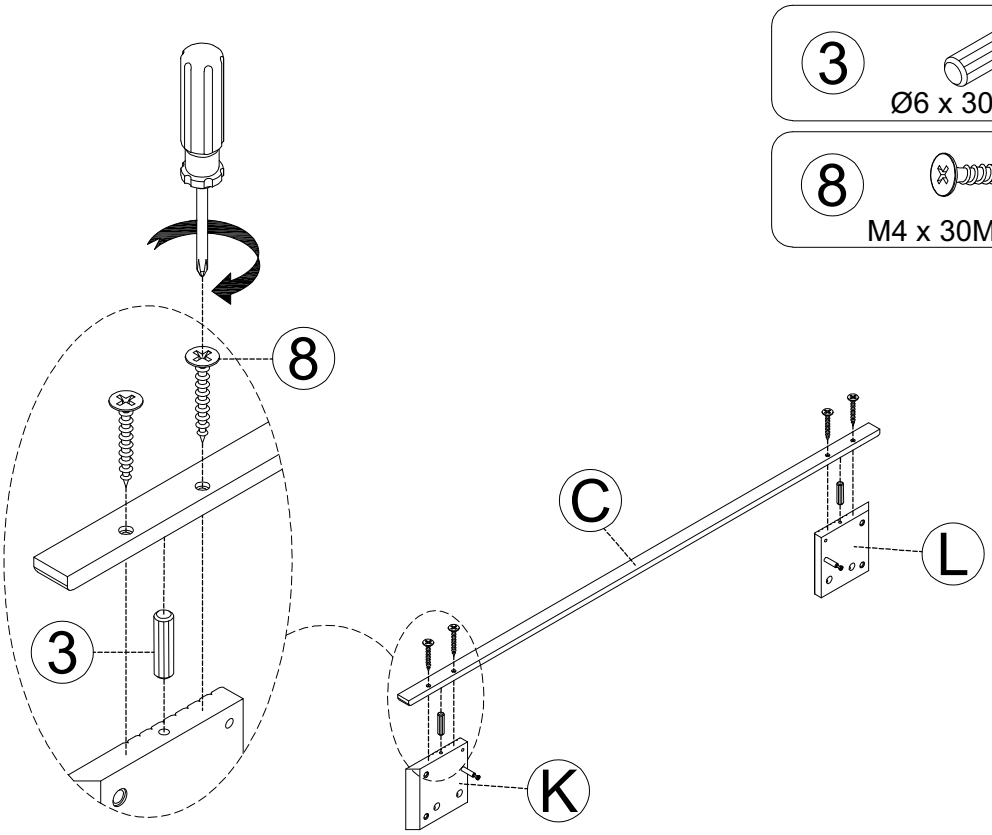

STEP 6

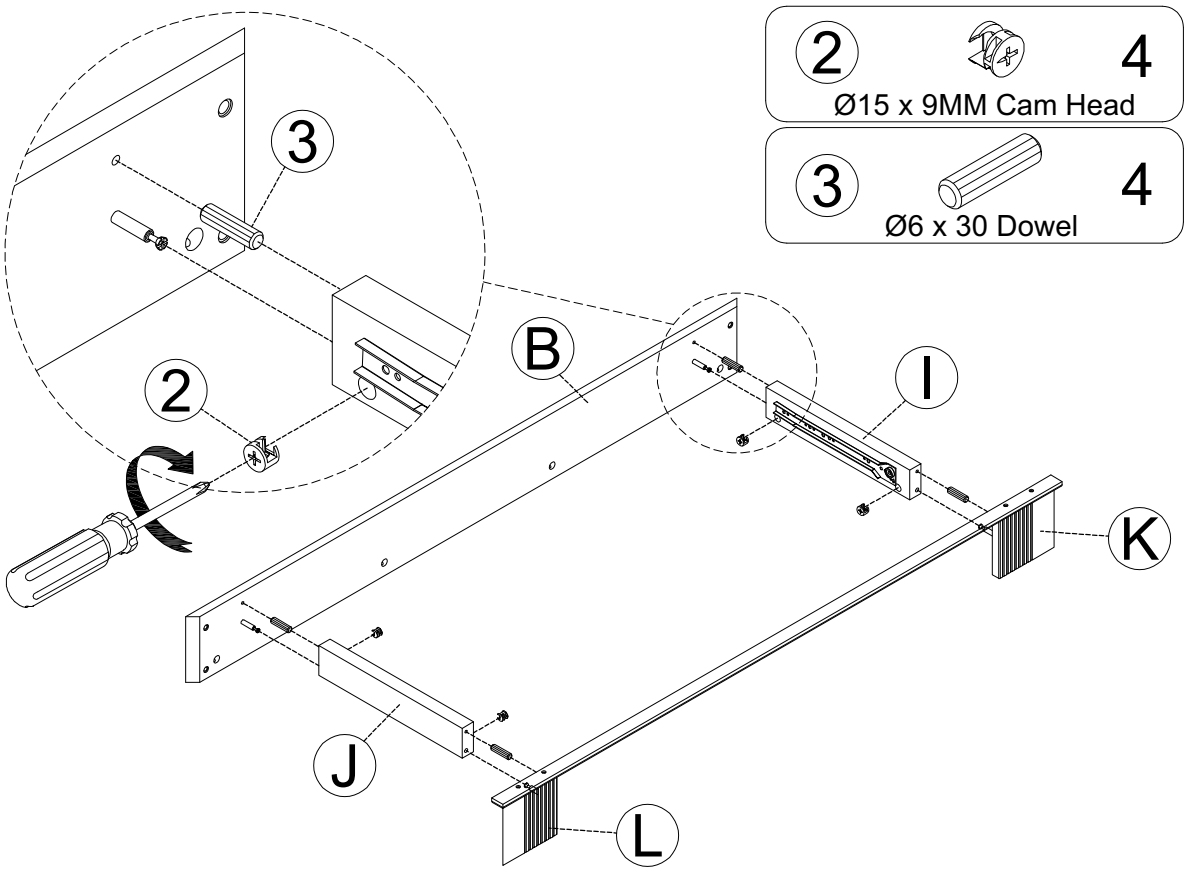

ASSEMBLY DESCRIPTION

STEP 7

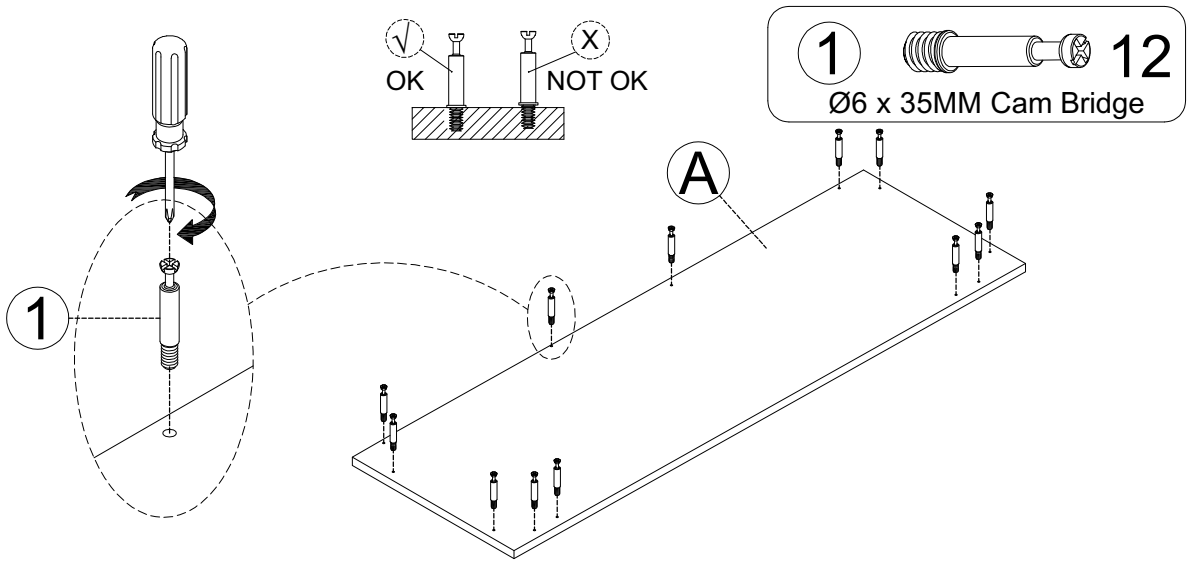

9 2 M4 x 45MM Screw

10 8 M6 x 45MM BOLT

11 1 ALLEN KEY

STEP 8

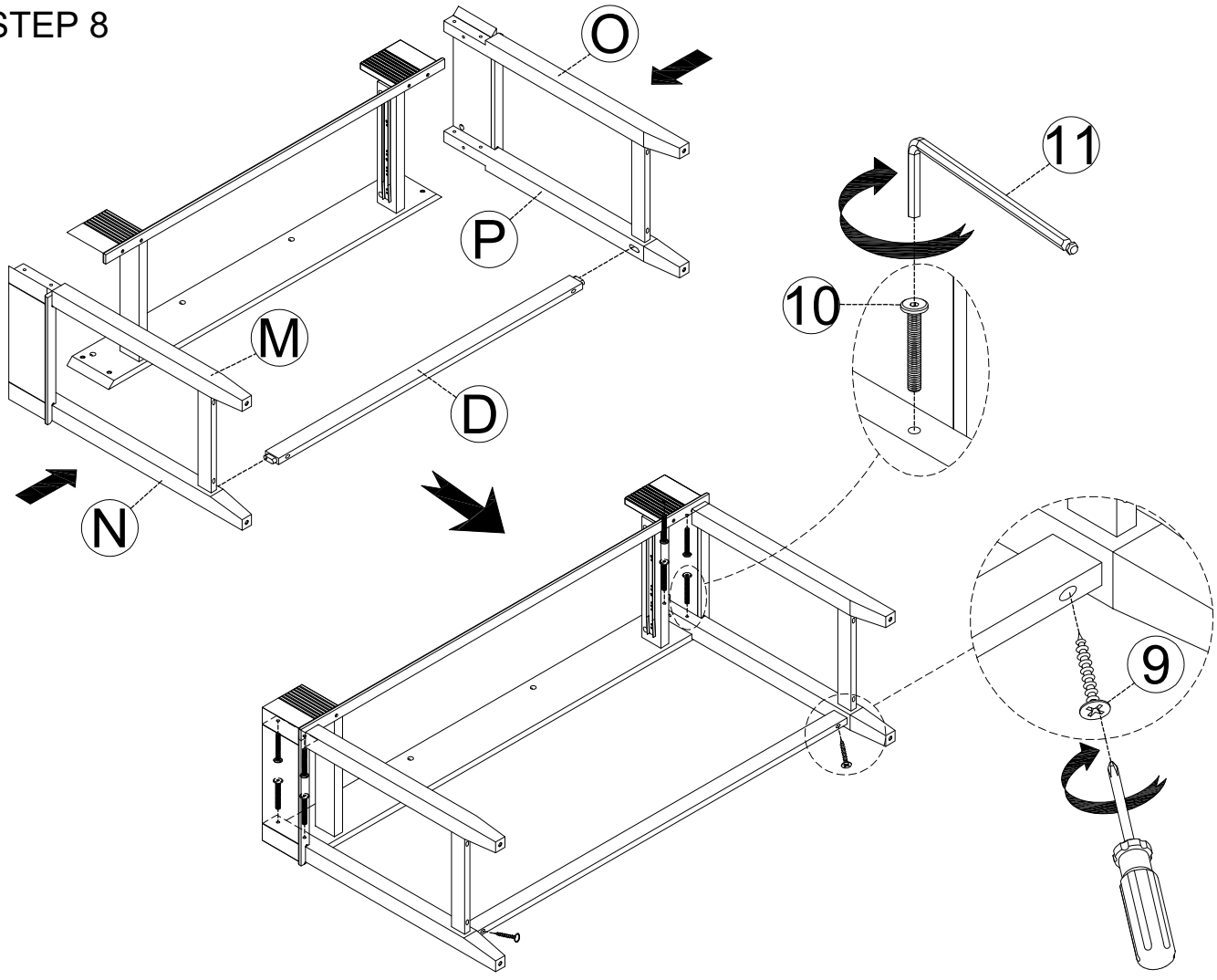

ASSEMBLY DESCRIPTION

STEP 9

2  12

Ø15 x 9MM Cam Head

STEP 10

4  4

Leveler

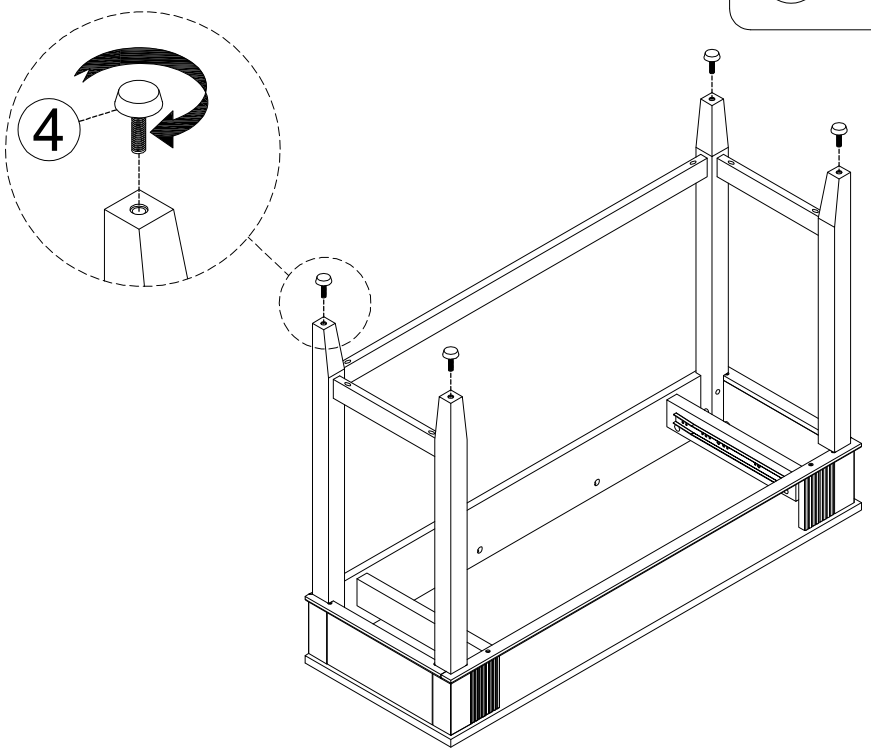

ASSEMBLY DESCRIPTION

STEP 11

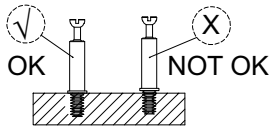

1 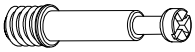 4
Ø6 x 35MM Cam Bridge

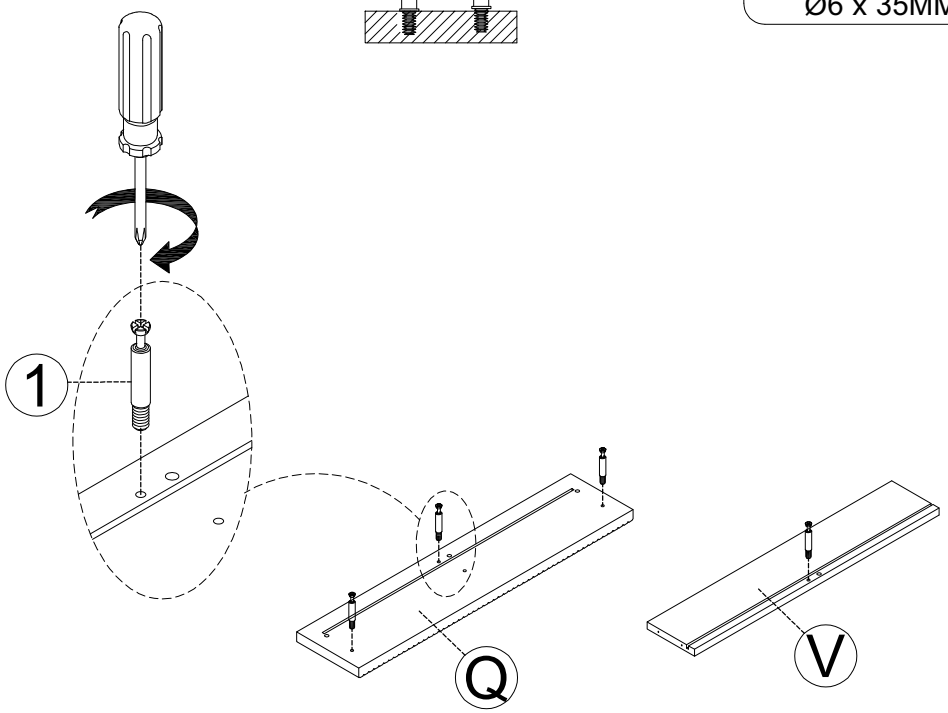

STEP 12

2  3
Ø15 x 9MM Cam Head

3 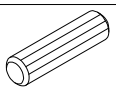 3
Ø6 x 30 Dowel

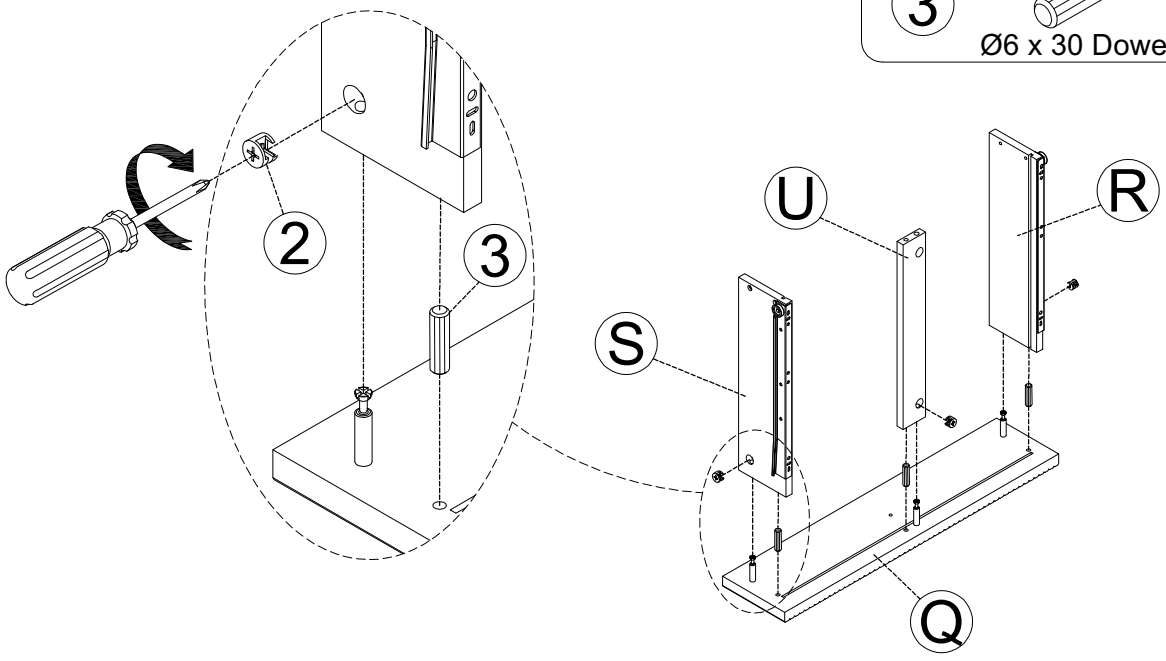

ASSEMBLY DESCRIPTION

STEP 13

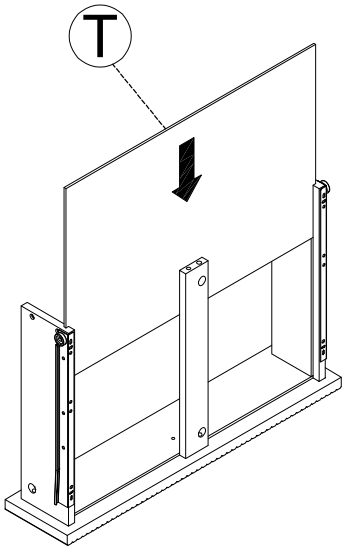

STEP 14

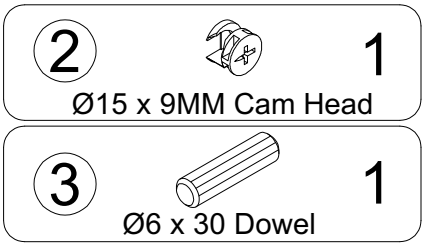

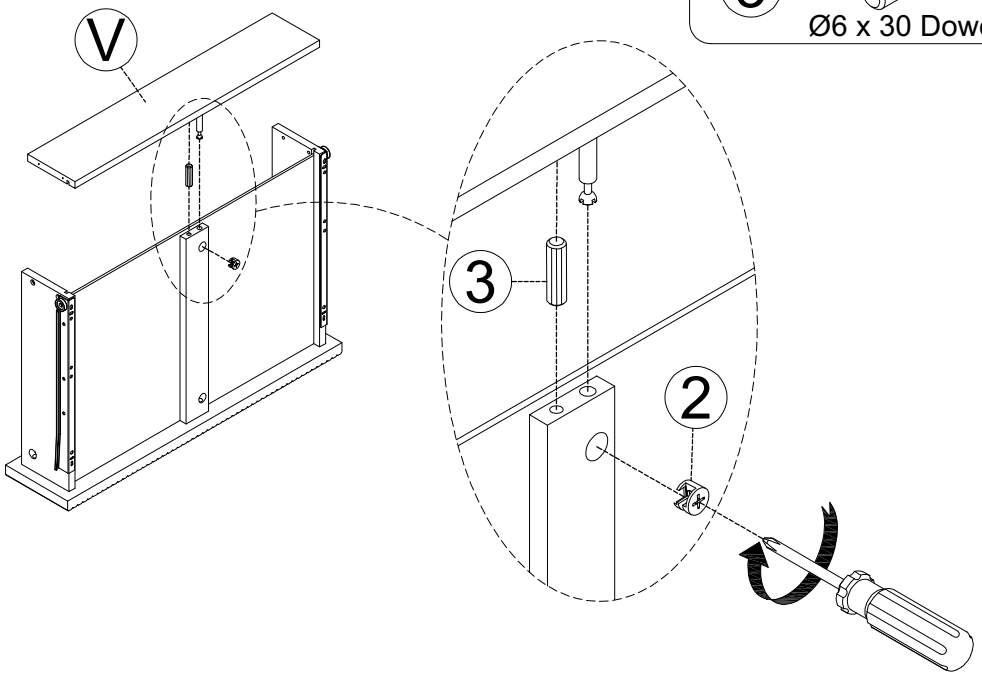

ASSEMBLY DESCRIPTION

STEP 15

7 — 4
M3.5 x 20MM Screw

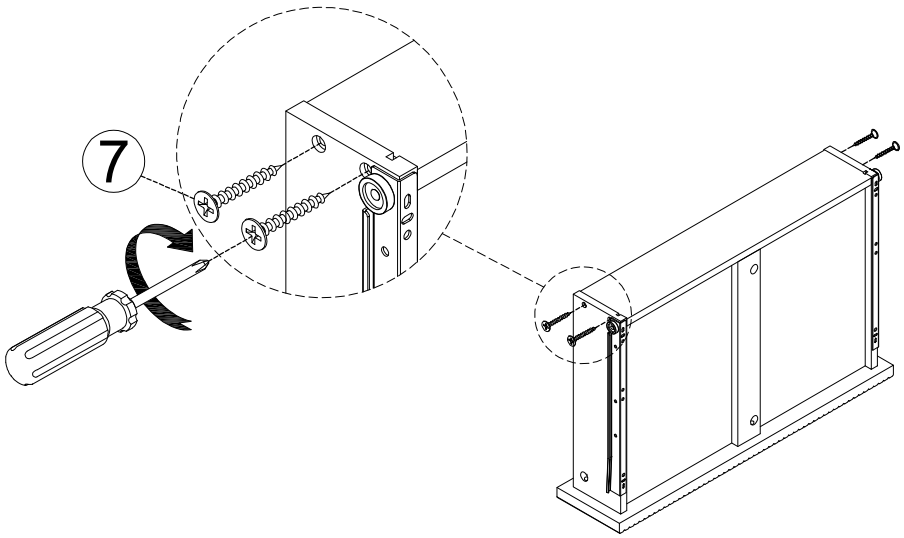

STEP 16

5 — 1
Handle

6 — 1
M4 x 25 Bolt

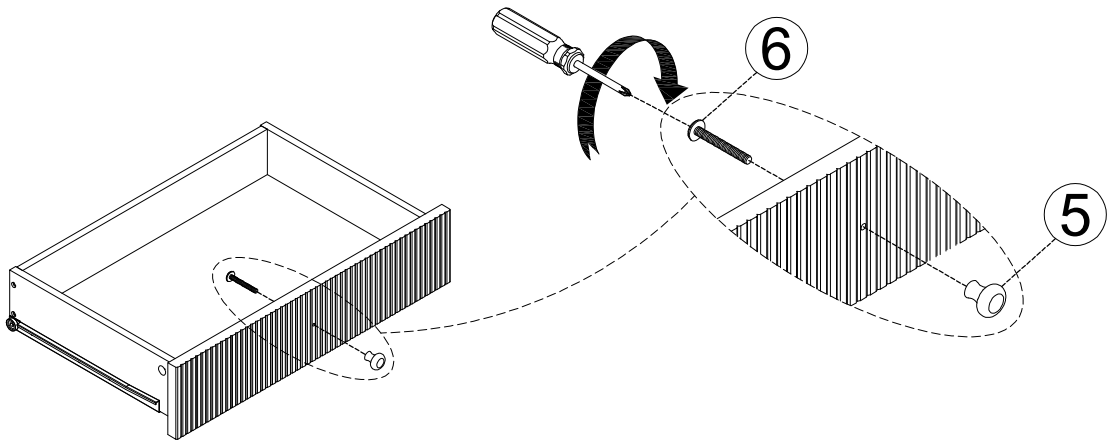

ASSEMBLY DESCRIPTION

STEP 17

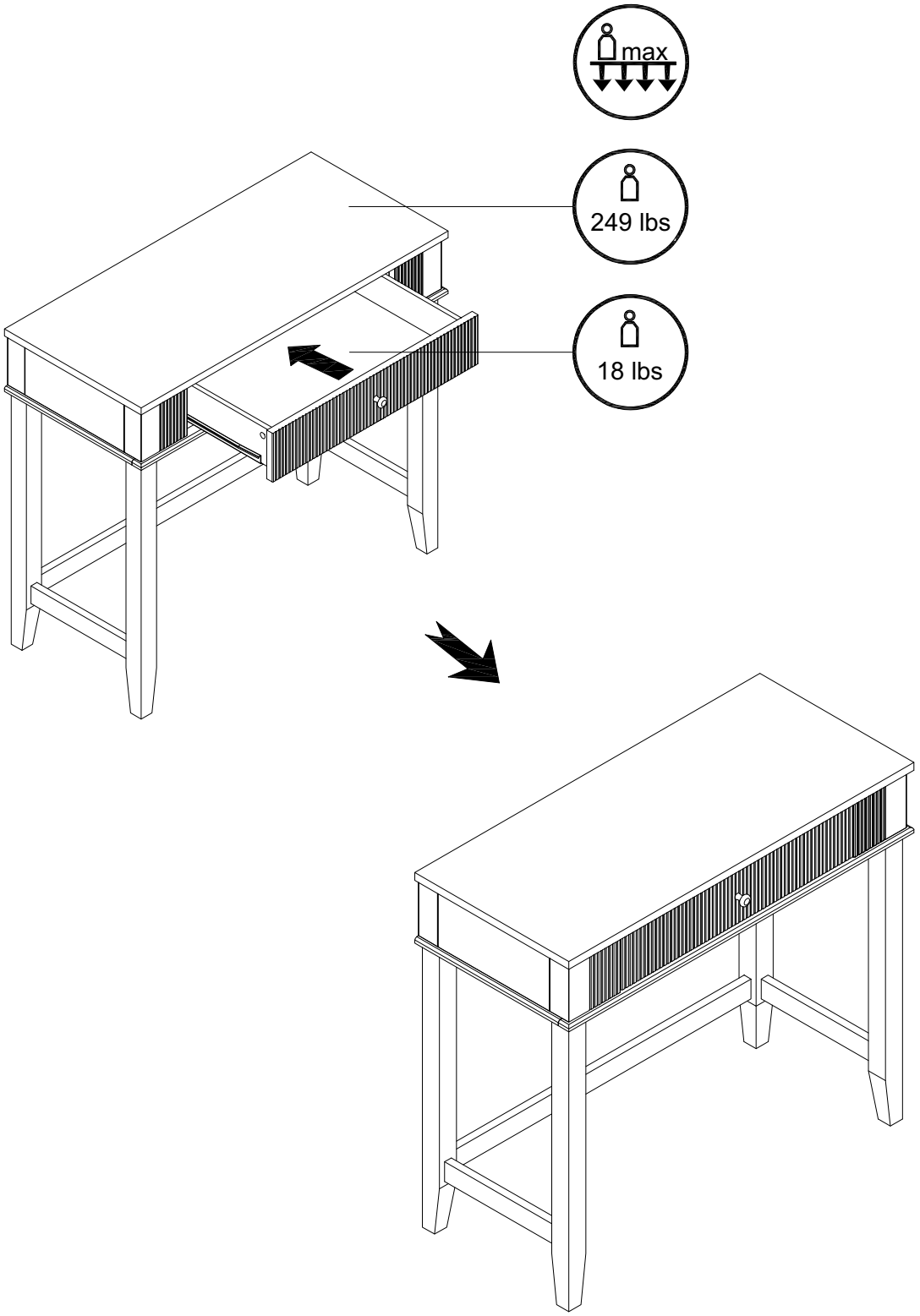

Finished