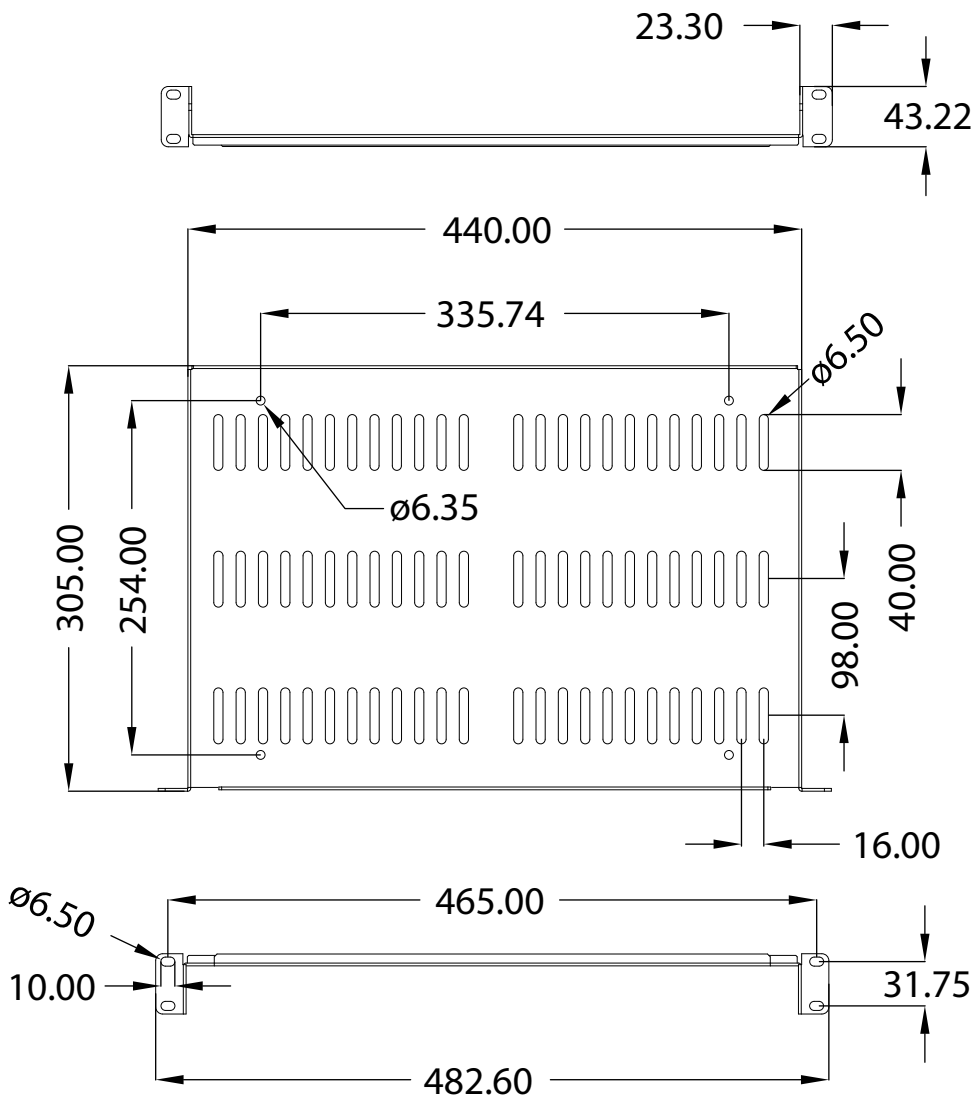

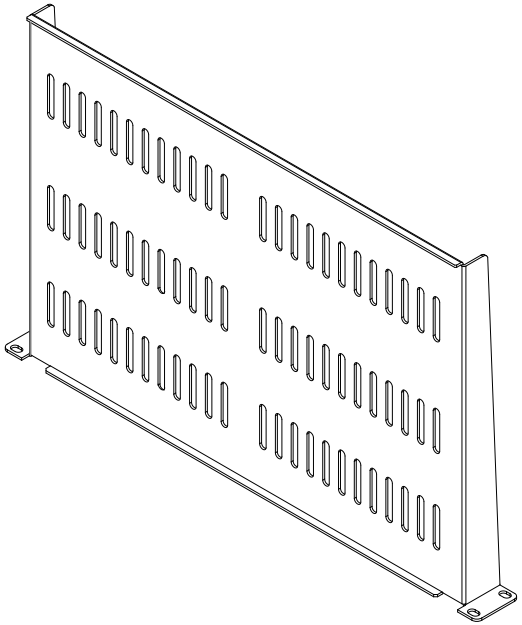

THIRD ANGLE PROJECTION

GENERAL NOTES

DIMENSIONS ARE IN MM - DO NOT SCALE

THIS DOCUMENT CONTAINS CONFIDENTIAL, PROPRIETARY INFORMATION THAT IS PROPERTY OF STARTECH.COM

StarTech.com

PRODUCT ID	SHELF-1U-12-FIXED-V
DESCRIPTION	1U Server Rack Shelf - Vented

DO NOT SCALE | SHEET: 1 OF: 1 | UPLOAD DATE: 6/24/2024