KINGSTON Shower Riser with Rectangular Enclosure

Installation Instructions

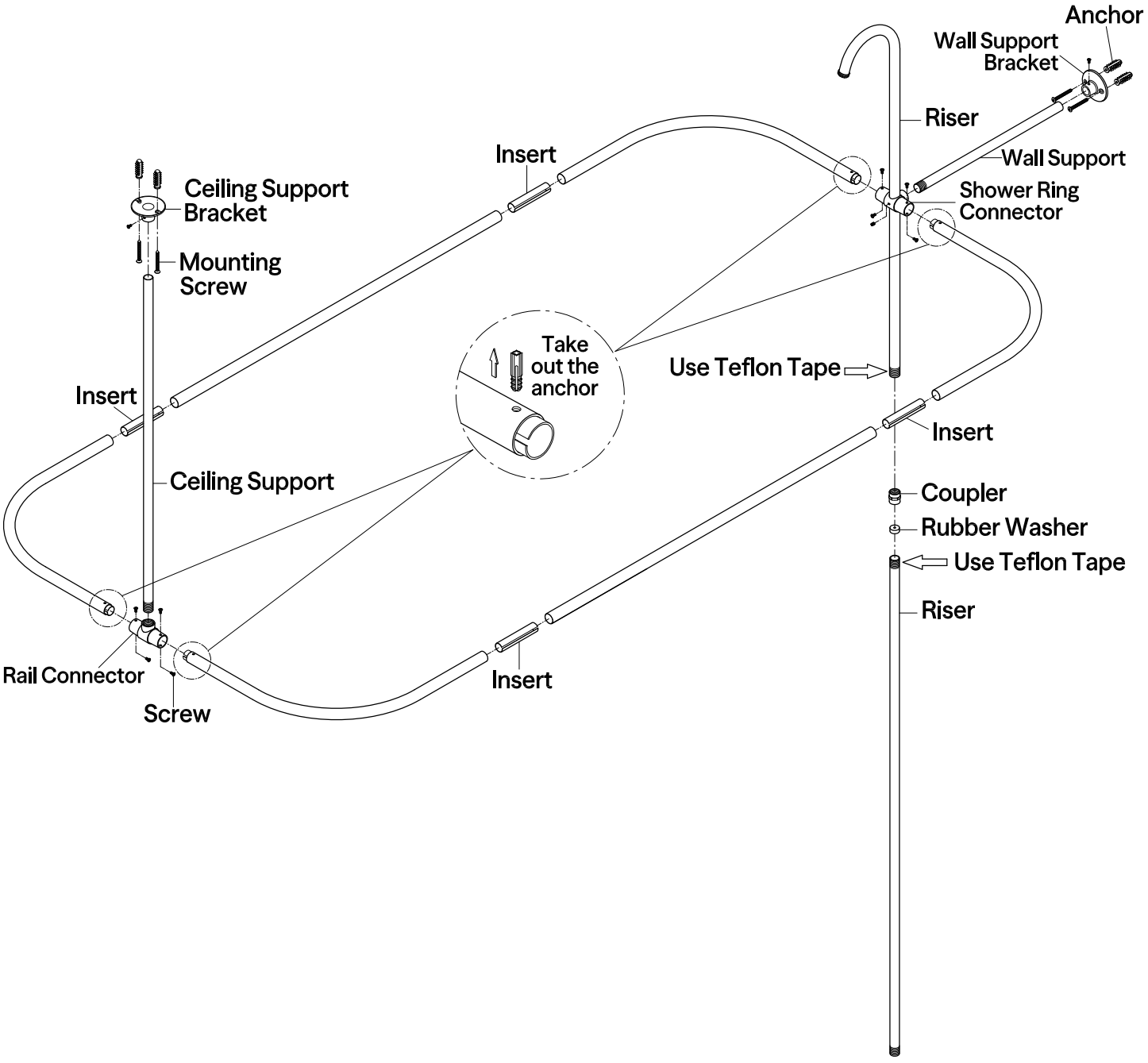

Parts:

Mounting Screw & Anchor	Screw	Set Screw
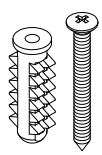		
4 Pcs	10 Pcs	1 Pc

www.kingstonbrass.com

TOLL-FREE CUSTOMER SERVICE: 1-877-2-KBRASS
TECHNICAL SUPPORT E-mail: service@kingstonbrass.com
12775 Reservoir Street, Chino, CA 91710

NOTICE

Failure to follow all directions may cause leaks which may result in water damage

⚠CAUTION

Failure to follow all installation directions may cause product to detach from the wall and cause serious injury

Before Beginning Installation:

1. Flush plumbing lines to clear debris in pipe and plumbing lines to avoid existing clogs into waterway & cartridge system of new faucet fixture.
2. Shut off both supply lines after flushing.

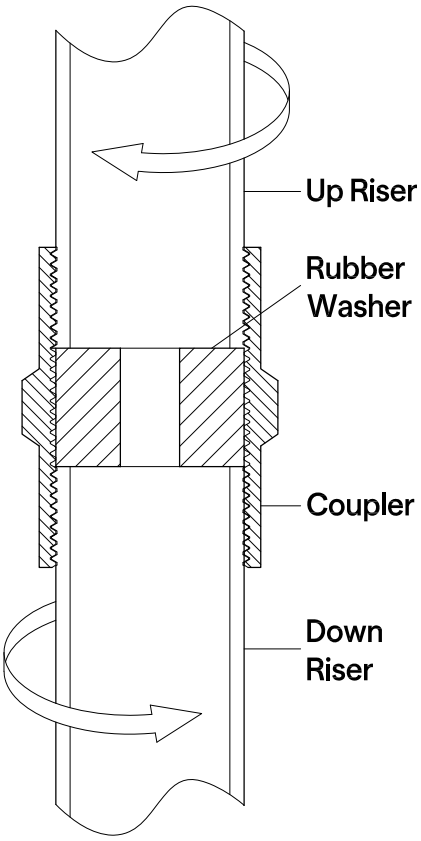

Installation Steps:

Step 1. Insert the thick rubber washer inside the coupler.
Step 2. Apply Teflon tape on both thread ends of up and down risers.
Step 3. Thread both up and down risers onto coupler.
Step 4. Make sure the rubber washer is properly compressed between the up and down risers. Also, the coupler should be tightly connected; no looseness is allowed.

Warning !!!

If the rubber washer is loose inside the coupler or not compressed, it will not effectively seal the water and will lead to leakage.

©2025 LVC Kingston LLC. All Rights Reserved.
2026-06-D

Cleaning

Clean with a damp cloth only.
Avoid using metal or abrasive polishes.