MASTERPRO
PREMIUM QUALITY

WIDE PASTA MACHINE

INSTRUCTIONS FOR USE

PREPARING THE PASTA MACHINE

Before first use, clean machine with a dry cloth to remove any oil residue.

Use the clamp to fix the pasta machine to table/benchtop and insert crank handle into the opening situated on the side of the smooth rollers (see image).

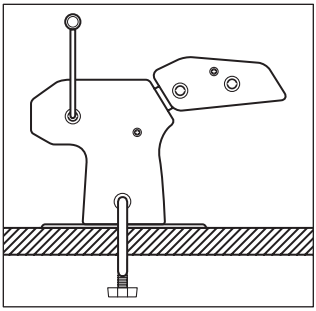

PREPARING THE PASTA DOUGH

Ingredients:

500g plain flour (for "al dente" pasta, mix 250g of plain flour with 250g of durum wheat flour, do not add salt)

5 eggs at room temperature (eggs may be replaced with 250mls of water)

- Pour the flour into a bowl.
- Crack the eggs and let them drop into the middle of the flour.
- Blend the eggs with the flour thoroughly using a fork.
- Once mixed, knead the mixture with your hands until it is completely smooth and elastic.
- If the mixture is too dry, you may add a small quantity of water; if it is too soft, add some flour.
- The perfect pasta dough will not stick to your hands.
- Remove pasta dough from the bowl and place on a lightly floured work surface.
- Cover with tea towel and allow dough to rest for 30 minutes.
- Your pasta is now ready to cut up into small pieces.

CREATING PASTA WITH YOUR PASTA MACHINE

Pull out the thickness control dial and turn it to Position 7. This will open the two smooth rollers approximately 3mm (see image).

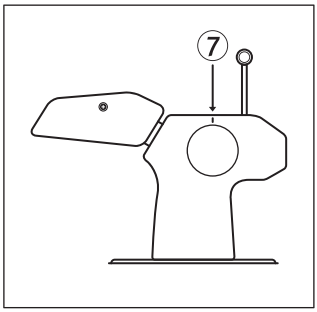

By turning the crank handle, pass a small piece of dough through the machine (see image). Gently hold the flattened dough as it comes out of the pasta machine; do not pull on it. Repeat this operation about 5-6 times, folding the dough over each time and adding flour if necessary.

Once the dough has reached an even shape, set dial to Position 6 and pass it through the rollers once.

Now let it pass through once at Position 5 and so on, until the pasta dough has reached your desired thickness.

With a knife, cut the dough into pieces of about 25cm in length.

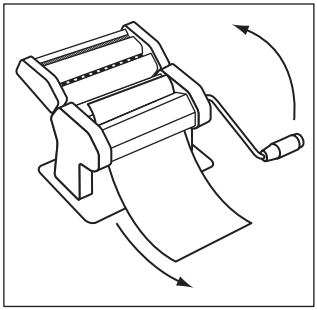

To add cutting blade attachment, slide it down the tracks on the main unit. Insert the crank handle into the opening situated on the side of the selected blade and turn handle slowly, passing the pasta sheets through, so as to obtain the type of pasta your prefer (see image).

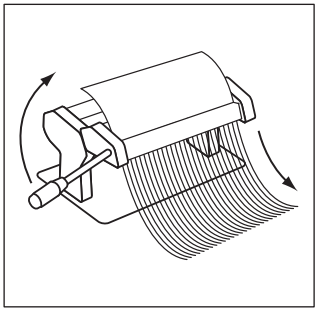

NOTE # 1: If the rollers will not cut your pasta, the dough may be too soft. In this case, add flour to the dough and pass it through the smooth rollers several times.

NOTE # 2: If the dough is too dry, and is not caught by the cutting rollers, add a little water before passing it through the smooth rollers several times.

Place the pasta onto a clean surface and leave it to dry for at least an hour. When laying out the pasta sheets, they must not touch or overlap each other as the moist pasta will stick together.

Cook pasta in a large pan of boiling water (4 litres per 500g of pasta). Depending on the thickness, fresh pasta takes approximately 2-5 minutes to cook.

Stir gently while pasta is cooking and drain when ready.

Fresh pasta keeps for 1-2 weeks if stored in a cool, dry area.

MAINTENANCE OF YOUR PASTA MACHINE

- To remove cutting attachment, lift the attachment and slide it out along its tracks.
- Use a brush and a small wooden skewer to clean machine after every use.
- If necessary, use a few drops of vegetable oil to lubricate the ends of the cutting rollers.
- Never clean rollers with a knife, or by passing a cloth through the rollers.
- Never rinse your pasta machine under running water or put into the dishwasher.