KINGSTON FAUCETURE

Steel Bathroom Console Sink Base with Glass Shelf

Installation Instructions

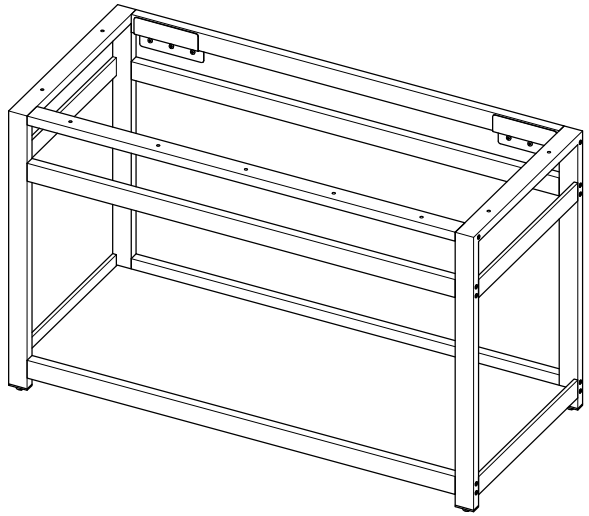

Parts:

☐Shape		Straight Tube					
A	B	C	D	E	F	G	
1 Pc	1 Pc	1 Pc	1 Pc	2 Pcs	2 Pcs	2 Pcs	
		Screw		Bolt	Gasket	Glass Shelf	Mounting Bracket
		Ø23.5mm H	I 1/4" x 9mm	J 1/4" x 75mm	K	L	M
		4 Pcs	8 Pcs	20 Pcs	12 Pcs	1 Pc	2 Pcs

www.kingstonbrass.com

TOLL-FREE CUSTOMER SERVICE: 1-877-2-KBRASS
TECHNICAL SUPPORT E-mail: service@kingstonbrass.com
12775 Reservoir Street, Chino, CA 91710

⚠CAUTION

Failure to follow all installation directions may cause product to detach from the wall and cause serious injury



⚠WARNING

Lifting hazard.

Single person lift could cause injury.
Use assistance when moving or lifting.

Tools Required

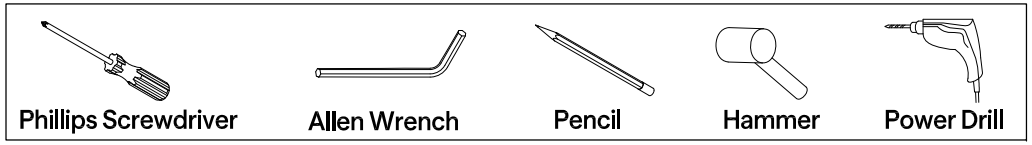

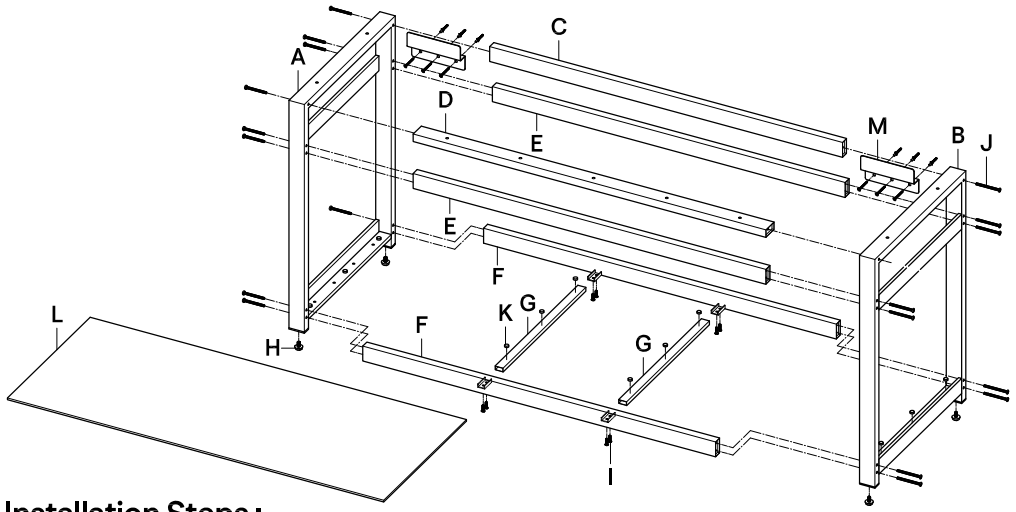

Installation Steps :

Step 1. Thread adjustable leg screws (Part H) to the bottom of Parts A & B.
Step 2. Locate the two pieces of Part F as well as Part G. Place Part G in the groves and secure with the short screw (Part I). Repeat again for the second Part G.
Step 3. Locate Part A and Part B, face the sides with railing to each other and secure Part F from Step 2 using the long screws (Part J). Do not secure completely until the end of installation to leave room for the other support bars.
Step 4. Install Part E to the frame using the long screws (Part J) and do not secure completely.
Step 5. Install Part D and Part C using the same procedures as above. Once all bars are secure, use the Allen wrench to secure the screws comp
Step 6. Flip the sink base upright and ensure all screws have been tightened, apply Part K to Part A, B and G, then install the glass panel to the sink base. Exercise caution when installing the glass panel.
Step 7. Level entire structure by adjusting leg screws (Part H) as necessary.
Step 8. Once unit has been assembled place at the desired location and after leveling draw a line across the bottom of the top vertical beam (C).
Step 9. Remove the Console sink base, find the location of the wood studs and using the marked line as a guide to install support brackets at the location of the studs, make sure at least one of the screws is secured to the wood; you will need an anchor to secure from a secondary point in the bracket.
Step 10. The depth of wall drill hole for installing anchor should be 40mm (1-5/8") Min.
Step 11. Slide Console sink base into place and attach top sink.

Cleaning

Clean with a damp cloth only.
Avoid using metal or abrasive polishes.

©2025 LVC Kingston LLC. All Rights Reserved.
2025-05-D