This portable gas grill must be used only outdoors in a well-ventilated space and must not be used inside a building, garage, screened-in porch, gazebo or any other enclosed area.

NAPOLEON

APPLY SERIAL NUMBER LABEL FROM CARTON

Serial No.
XXXXXX000000
MODEL NO.

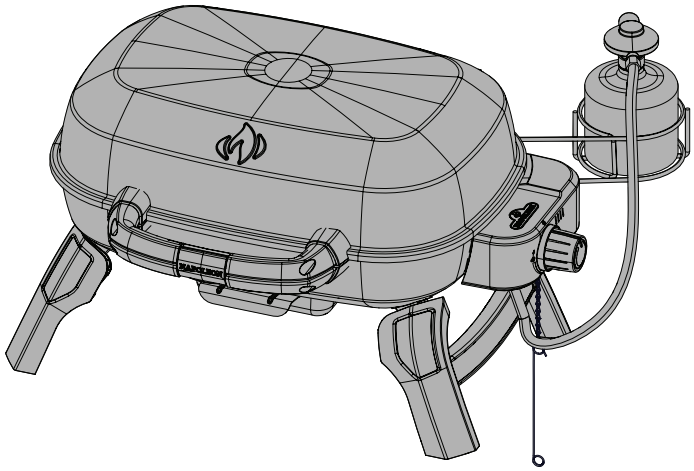

DO NOT DISCARD

TQ240

DANGER

IF YOU SMELL GAS:

- **Shut off gas to the appliance.**
- **Extinguish any open flame.**
- **Open lid.**
- **If odor continues, keep away from the appliance and immediately call your gas supplier or fire department.**

WARNING! Failure to follow these instructions exactly could result in fire, or explosion which could cause property damage, personal injury or death.

WARNING

Do not try to light this appliance without reading the "LIGHTING" instructions section of this manual.

Do not store or use gasoline or other flammable liquids or vapors in the vicinity of this or any other appliance. An L.P. cylinder not connected for use must not be stored in the vicinity of this or any other appliance. If the information in these instructions is not followed exactly, a fire or explosion may result, causing property damage, personal injury or death.

Adults and especially children should be alerted to the hazards of high surface temperatures. Young children should be supervised near the portable gas grill.

Notice to Installer: Leave these instructions with the grill owner for future reference.

DO NOT REMOVE
AUSTRALIA AND NEW ZEALAND
GAS SAFETY CERTIFICATION

Wolf Steel Ltd.
214 Bayview Drive,
Barrie, Ontario, CANADA L4N 4Y8
grills@napoleon.com

GasMark IAPMO TM

IAPMO GMK10539
AS/NZS 5263.1.7

WARNING! **Failure to follow these instructions could result in property damage, personal injury or death. Read and follow all warnings and instructions in this manual prior to operating grill.**

Safe Operating Practices

- This portable gas grill must be assembled exactly according to the instructions in the manual. If the grill was store assembled, you must review the assembly instructions to confirm correct assembly and perform the required leak tests before operating the grill.
- Read the entire instruction manual before operating the portable gas grill .
- Do not modify the appliance.
- This portable gas grill must only be used outdoors in a well-ventilated space and must not be used inside a building, garage, screened in porch, gazebo or any other enclosed area.
- Do not use this grill under extended awnings. Failure to follow these instructions could result in a fire or personal injury.
- This portable gas grill must not be installed in or on recreational vehicles and/or boats.
- This portable gas grill is designed for L.P. only.
- Do not locate in windy settings. High winds adversely affect the cooking performance of the portable gas grill .
- Under no circumstances should this portable gas grill be modified.
- Do not operate unit under any combustible construction.
- Maintain proper clearance to combustibles 18” (457mm) to rear of unit, 18” (457mm) to sides). Additional clearance is recommended near vinyl siding or panes of glass.
- The gas supply hose (optional) must be installed in a manner that will not allow contact with any hot surfaces of the grill while in use or in the storage/travel mode.
- The propane cylinder must be disconnected when the portable gas grill is not in use.
- When the propane cylinder is connected to the appliance, the portable gas grill and cylinder must be stored outdoors in a well-ventilated space.
- When the portable gas grill is to be stored indoors, the connection between the propane cylinder and the portable gas grill must be disconnected and the cylinder removed and stored outdoors in a well ventilated space out of reach of children. Disconnected cylinders must not be stored in a building, garage or any other enclosed area.
- Inspect the gas supply hose (optional) before each use. If there is evidence of excessive abrasion or wear or the hose is cut, it must be replaced prior to using the portable gas grill with a replacement pressure regulator and hose assembly specified by the grill manufacturer.
- Do not route hose (optional) underneath drip pan - proper hose clearance to bottom of unit must be maintained.
- Leak test the unit before initial use, annually and whenever any gas components are replaced.
- Follow the lighting instructions carefully when operating grill.
- Do not light burners with lid closed.
- The use of alcohol, prescription or non-prescription drugs may impair the consumer’s ability to properly assemble or safely operate the portable gas grill .
- Do not leave grill unattended when operating. Keep children and pets away from the appliance at all times.
- Do not move grill when hot or operating.
- Keep any electrical supply cord and fuel supply hose away from any heated surfaces.
- Clean grease tray regularly to avoid build-up, which may lead to grease fires.
- Do not use water, beer, or any other liquids to control flare-ups.
- Do not use a pressure washer to clean any part of the unit.
- This portable gas grill is not intended for commercial use.
- This portable gas grill is not intended for and should never be used as a heater.

DIMENSIONS

TQ240 GRILL

2.63 kW/h MAIN BURNER
GRILL SIZE: 240 in² (1548 cm²)
ALL DIMENSIONS ARE APPROXIMATE

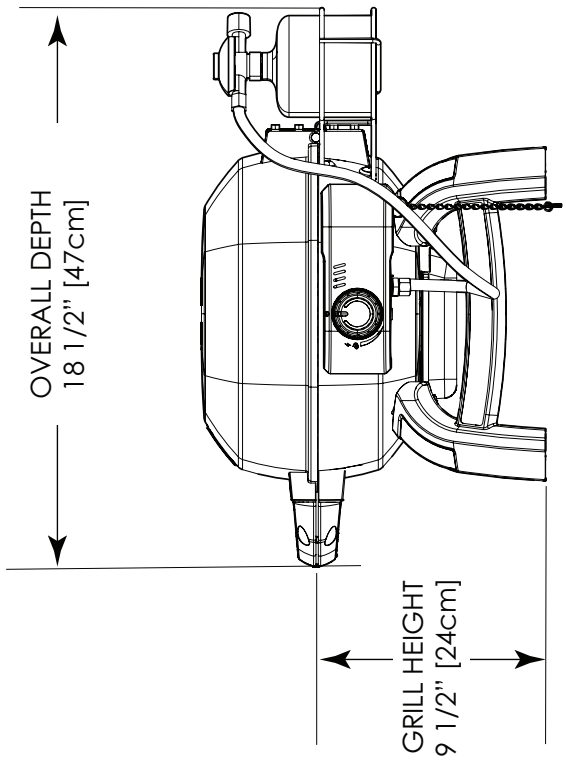

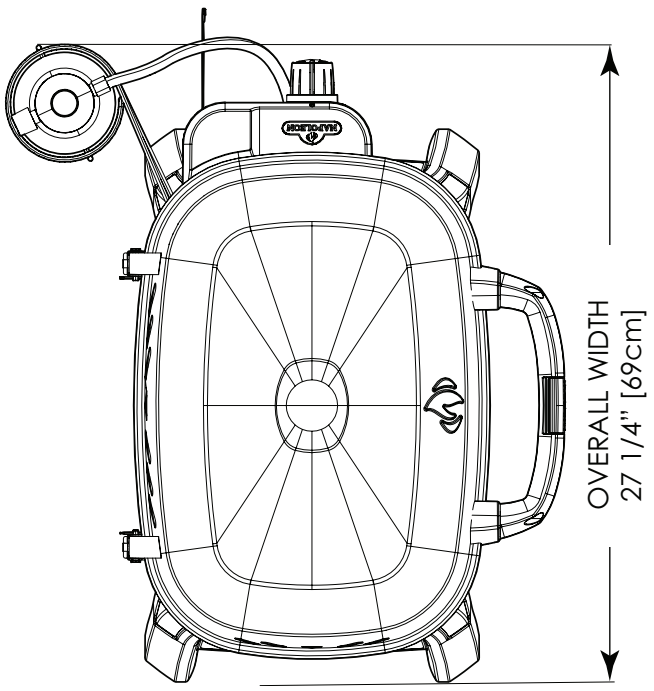

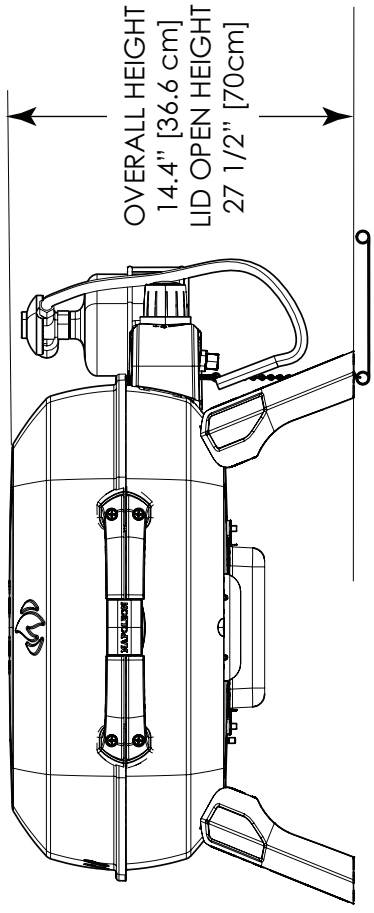

Handle With Care

CAUTION! Use care when handling or transporting your outdoor gas grill to prevent damage and misalignment of internal components. Although this outdoor gas grill has been designed with mobility in mind, rough handling or abuse will result in damage to internal components, preventing your outdoor gas grill from operating properly.

Correct Disposal Of This Product

This marking indicates that this product should not be disposed with other household wastes throughout the EU. To prevent possible harm to the environment or human health from uncontrolled waste disposal, recycle it responsibly to promote the sustainable reuse of material resources. To return your used device, please use the return and collection systems or contact the retailer where the product was purchased. They can take this product for environmental safe recycling.

Gas Cartridge

Use only cartridges, which meet national and regional codes. **For optimal performance the outdoor gas grill should be operated on propane.** Disposable cartridges must conform to the EN417 standard and be equipped with a lindal self-sealing valve. Check that seals (between the appliance and the gas cartridge or gas cylinder) are in place and in good condition before connecting to the gas cartridge or gas cylinder. Cartridges must have a fuel capacity of between 230g and 460g. Cartridges must be filled with either propane or a propane / butane mix.

- Inspect the rubber o-ring on the regulator. If there is damage replace the regulator.
- Never connect a cartridge which does not meet local codes.
- Disposable cartridges must always be secured to the side of the outdoor gas grill in an upright position using the retaining bracket supplied.
- Never store a spare cartridge in close proximity of an operating appliance. Cartridges must not be exposed to extreme heat or direct sunlight.
- Never over tighten the cartridge, as over tightening may cause damage to the regulator connection or the cartridge connection. This can cause a leak or restrict the flow to the unit.

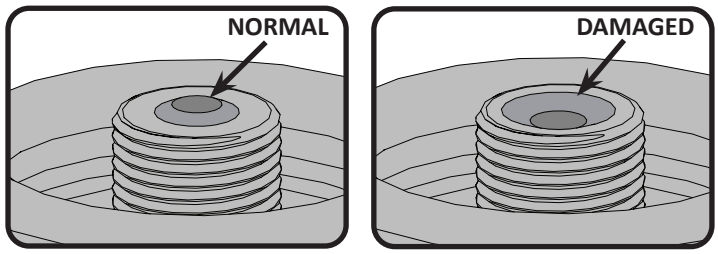

WARNING! Do not use the appliance if it has damaged or worn seals"; "Do not use an appliance which is leaking, damaged or which does not operate properly.

WARNING! The dust cap should be in place when the cartridge is not in use to prevent dirt and debris from entering the valve.

WARNING! Review instructions on the cartridge prior to using. A dented or rusted cartridge may be hazardous. Discard cartridge if rust particles or debris are in the connection area of the cartridge.

Cartridge Connection: Ensure that the gas regulator hose is kink free. The cartridge has a positive seating connection, which will not allow gas flow until a positive seal has been achieved. Remove the cap or plug from the cartridge. To install the cartridge simply screw it into the regulator in a clockwise direction. Hand tighten only, never use tools. The connection/changing of the cartridge needs to be performed away from any ignition sources.

Leak test all joints prior to using the barbecue. A leak test must be performed annually, and each time a cylinder is hooked up, or part of the gas system is replaced. Disposable cartridges must be secured to the side of the grill, in an upright position, using the supplied retaining bracket. This will prevent liquid propane / butane from entering the regulator, which can cause over firing and damage to the regulator.

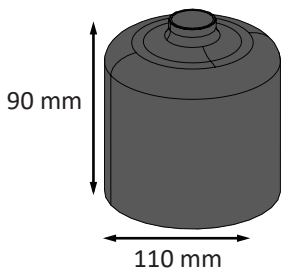

***For proper operation, ensure regulator valve is open.**

WARNING!

- **Do not route hose underneath drip pan.**
- **Ensure all connections are tightened using two wrenches. Do not use Teflon tape or pipe dope on any hose connection.**
- **Ensure the hose does not contact any high temperature surfaces, or it may melt and leak causing a fire.**

Gas Hose

- If the hose and regulator are not included by the manufacturer, then only hoses and regulators which meet national and regional codes are to be used.
- Ensure that the hose does not come into contact with grease, other hot drippings, or any hot surfaces on the appliance.
- Check hose regularly. In the case of rips, melting or wear, replace hose before using the appliance.
- The hose must not be longer than 1.5m.
- Ensure that the hose is twist and kink free when installed.
- Replace the hose before expiry date printed on the hose.

Technical Data

The following table lists input values for the appliance.

Burner	Orifice Size			(Gross) Heat Input (Total)			Gas Usage (Total)		
	I	II	III	I	II	III	I	II	III
Main	0.80 mm	0.75 mm	0.70 mm	2.63kW	2.63kW	2.63kW	191 g/hr	191 g/hr	191 g/hr

Certified Gases / Pressures - Check rating plate to ensure that it corresponds with following list.

Gas Category	I3B/P(30)	I3+(28-30/37)	I3B/P(37)	I3B/P(50)
Orifice Sizes (see above)	I	I	II	III
Gases / Pressures	Butane 30mbar Propane 30mbar	Butane 28-30mbar Propane 37mbar	Butane 37mbar Propane 37mbar	Butane 50mbar Propane 50mbar
Countries	AL, BE, BG, CY, HR, DK, EE, FI, FR, HU, IS, IT, LT, LU, MT, MK, NL, NO, RO, SK, SI, SE, TR	GB, BE, CY, CZ, FR, GR, IE, IT, LV, LU, PT, SK, SI, ES, CH	PL	AT, CH, DE, SK

Do not tamper with or modify regulator. Use only A500i regulators which supply the pressure listed in the table above. For replacement, use only the regulator specified by the manufacturer.

Table Top Use

This unit has been designed with mobility in mind. With collapsible legs, this portable grill can be set up on most tabletops. The legs fold out and lock into place, folding back into a locked position when on the go.

WARNING! The legs located on each side of your grill must be unfolded during use.
WARNING! Do not use the grill on plastic, resin or glass table tops.

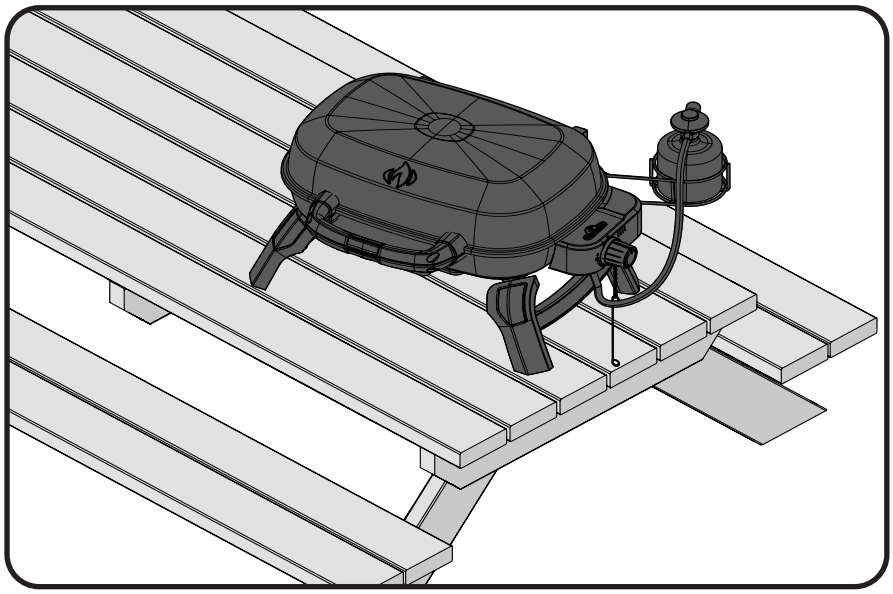

WARNING! Locate the hose out of pathways where people may trip over it or in areas where the hose may be subject to accidental damage. Do not tip or move propane supply cylinder.

WARNING! If these instructions are not followed exactly, a fire causing death or serious injury may occur.

- **Do not store a spare propane cylinder under or near this appliance.**
- **Never fill the cylinder beyond 80 percent full.**

Gas Cylinder Conversion (optional)

DANGER! Keep the appliance and the gas cylinder away from any sources of ignition throughout the conversion process.

Disconnect Small Gas Cylinder: Ensure the burner control knob is in the off position. Turn the small gas cylinder counterclockwise to disconnect it from the regulator.

Disconnect Regulator Assembly: Disconnect the small gas cylinder regulator and hose assembly from the appliance inlet using two wrenches.

Connect Large Gas Cylinder Regulator Assembly: Connect the large gas cylinder regulator and hose assembly to the appliance inlet using two wrenches.

Connect Large Gas Cylinder:

- Ensure that the gas cylinder, the gas cylinder valve, the appliance burner, and the appliance burner ports are free from debris.
- Ensure that the gas cylinder valve is in the closed position.
- Remove the cap or plug from the cylinder valve outlet.
- Connect the regulator assembly to the gas cylinder and tighten. Ensure that the hose is free from twists and kinks when installed. Ensure that the hose does not come in contact with grease, other hot drippings, or any hot surfaces on the appliance. Do not store a spare gas cylinder nearby. Never obstruct the cylinder shut off valve. Do not place the cylinder in an enclosure. Do not move the cylinder during appliance operation.
- Leak test all connections in a well-ventilated area according to the Leak Testing Instructions.

Maximum Gas Cylinder Dimensions

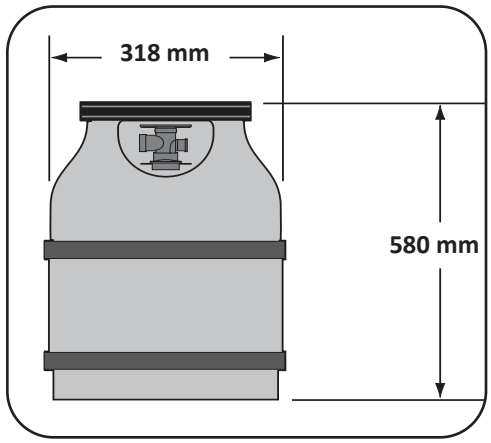

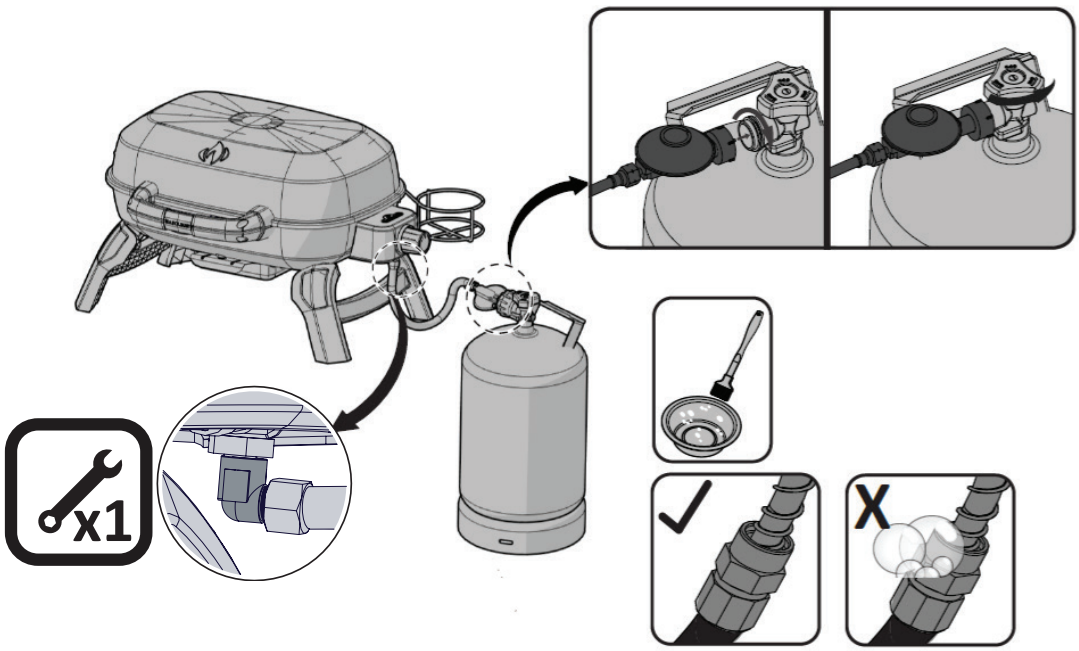

WARNING! Close the gas cylinder valve if you smell gas.

Leak Testing Instructions

WARNING! A leak test must be performed annually and each time a cylinder is hooked up or if a part of the gas system is replaced.

WARNING! Never use an open flame to check for gas leaks. Be certain no sparks or open flames are in the area while you check for leaks. Sparks or open flames will result in a fire or explosion, damage to property, serious bodily injury, or death.

Leak testing: This must be done before initial use, annually, and whenever any gas components are replaced or serviced. Do not smoke while performing this test, and remove all sources of ignition. See Leak Testing Diagram for areas to check. Turn all burner controls to the off position. Connect a disposable cylinder or slowly turn on the gas supply valve (large propane cylinder)

Brush a half-and-half solution of liquid soap and water onto all joints and connections of the regulator, hose, manifolds and valves.

Bubbles will indicate a gas leak. Either tighten the loose joint or have the part replaced with one recommended by the Napoleon Customer Solutions department and have the grill inspected by a certified gas installer.

If the leak cannot be stopped, immediately shut off the gas supply, disconnect it, and have the grill inspected by a certified gas installer or dealer. Do not use the grill until the leak has been corrected.

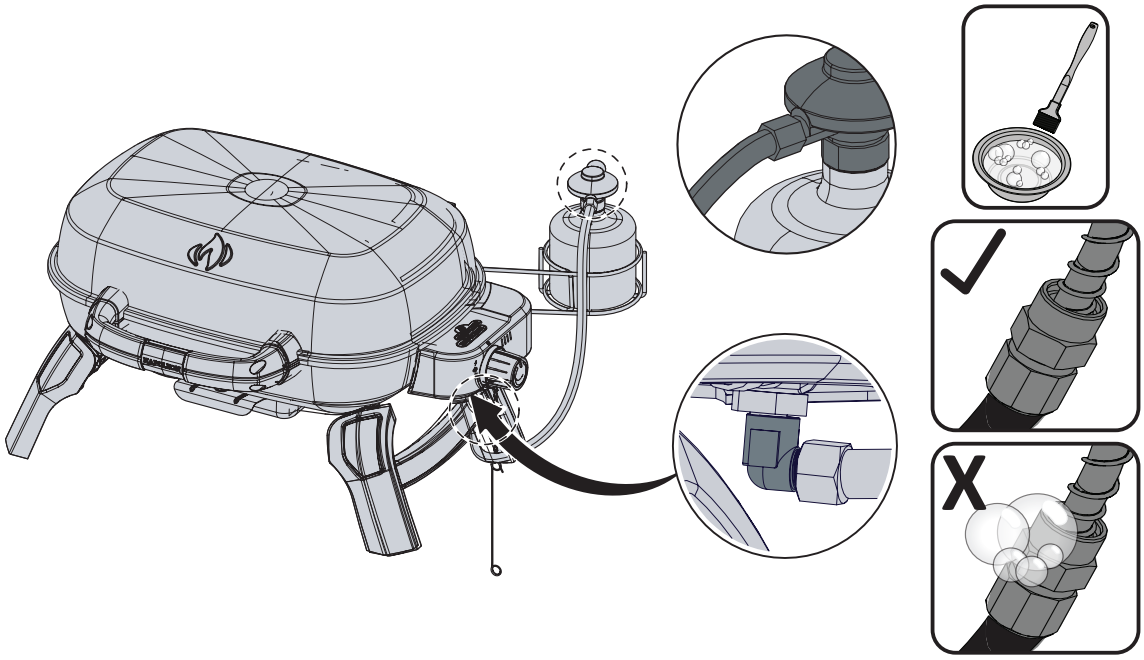

Lighting Instructions

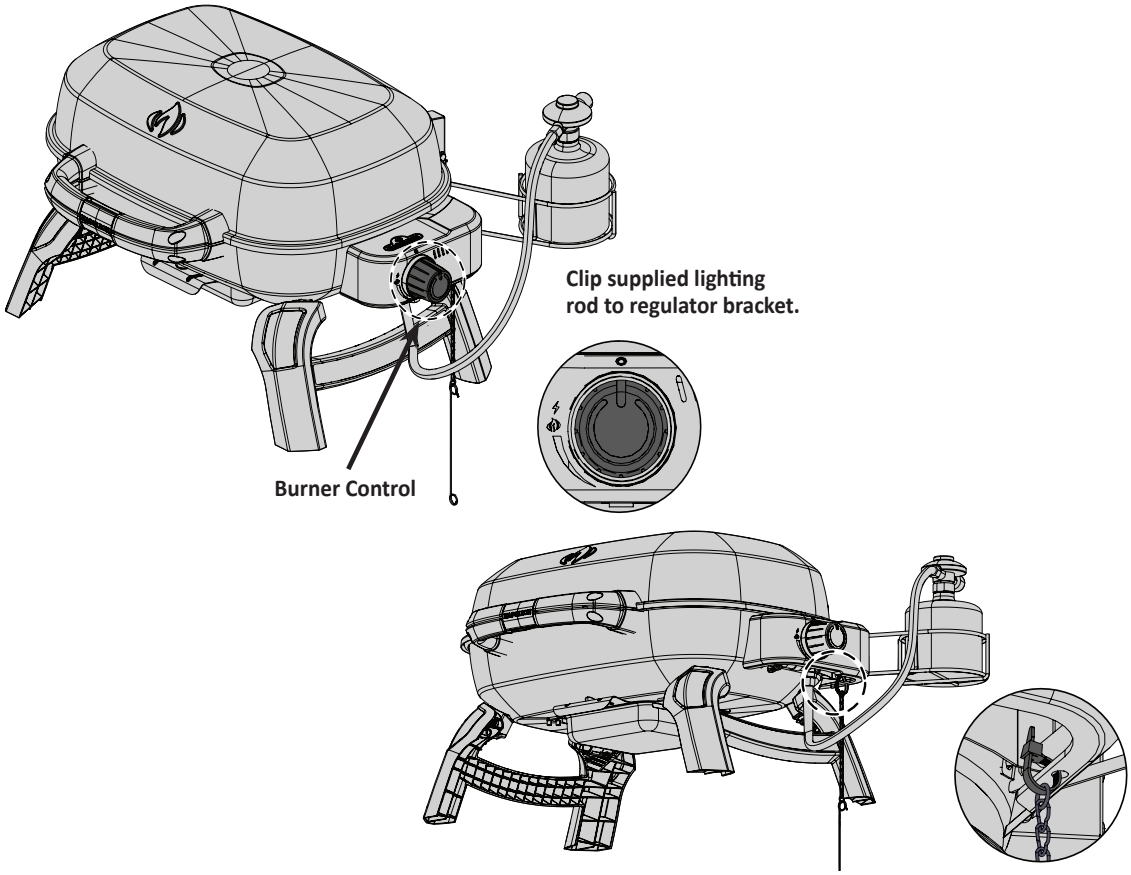

WARNING! **Open lid**

WARNING! **Ensure all burner controls are in the off position. Slowly turn on the cylinder gas supply valve**

Main Burner Lighting
1. Open grill lid
2. Push and turn any main burner control knob slowly to the 'hi' position. This action will ignite the selected burner.
3. If the burner does not ignite, then immediately turn the control knob back to the 'off' position and repeat step 2 several times.
4. If the burner will not ignite within 5 seconds, turn the control knob to the 'off' position and wait 5 minutes for any excess gas to dissipate, either repeat steps 2 and 3 or light with a match.
5. If lighting the unit with a match, clip the match into the supplied lighting rod. Hold the lit match down through the grill while turning the corresponding burner valve to high.

WARNING! **The normal operating burner flames may not be visible in daylight after ignition because they are very small and light blue. Heat can be felt when hovering your hand 6-8 inches over the grills surface, indicating proper function.**

Cooking Instructions



WARNING! Do not use this grill under extended awnings. Failure to follow these instructions could result in a fire or personal injury.



DANGER! Allow the grill to cool to the touch before moving or storing. Failure to do so could result in a fire resulting in property damage, personal injury or death.

Initial Lighting: When lit for the first time, the portable gas grill emits a slight odor. This is a normal temporary condition caused by the "burn-in" of internal paints and lubricants used in the manufacturing process and does not occur again. Simply run the main burners on high for approximately one-half hour.

Main Burner Use: When searing foods, we recommend preheating the grill by operating all main burners in the high position with the lid closed for approximately 10 minutes. Food cooked for short periods of time (fish, vegetables) can be grilled with the lid open. Cooking with the lid closed will ensure higher, more even temperatures that can reduce cooking time and cook meat more evenly. Food that has a cooking time longer than 30 minutes, such as roasts, can be cooked indirectly (with the burner lit opposite to the food placement). When cooking very lean meats, such as chicken breasts or lean pork, the grids can be oiled before pre-heating to reduce sticking. Cooking meat with a high degree of fat content can create flare-ups. Either trim the fat or reduce temperatures to inhibit this. Should a flare-up occur, move food away from the flames and reduce the heat. Leave the lid open. See Your All Season Grill cookbook by Napoleon for more detailed instructions.

Cleaning Instructions



WARNING! Always wear protective gloves and safety glasses when servicing your grill.







WARNING! To avoid the possibility of burns, maintenance should be done only when the grill is cool. Avoid unprotected contact with hot surfaces. Ensure all burners are turned off. Clean grill in an area where cleaning solutions will not harm decks, lawns, or patios. Do not use oven cleaner to clean any part of this portable gas grill . Do not use a self-cleaning oven to clean cooking grids or any other parts of the portable gas grill . Barbecue sauce and salt can be corrosive and will cause rapid deterioration of the portable gas grill components unless cleaned regularly.

Note: Stainless steel tends to oxidize or stain in the presence of chlorides and sulfides, particularly in coastal areas and other harsh environments, such as the warm, highly humid atmosphere around pools and hot tubs. These stains could be perceived as rust, but can be easily removed or prevented. To provide stain prevention and removal, wash all stainless steel and chrome surfaces every 3-4 weeks or as often as required with fresh water and/or stainless steel cleaner.

Cast Iron Cooking Grids: The cast iron cooking grids supplied with your new grill offer superior heat retention and distribution. By regularly seasoning your grids you are adding a protective coating, which will aid in resisting corrosion and increase your grids non-stick capabilities.

First Time Use: Wash the cooking grids by hand with mild dish soap and water to remove any residue from the manufacturing process (never wash in a dish washer). Rinse thoroughly with hot water and dry completely with a soft cloth. This is important to avoid moisture from entering the cast iron.

Seasoning: Using a soft cloth, spread VEGETABLE SHORTENING with a high smoke point over the entire grid surface ensuring all grooves and corners are covered. Sunflower, avocado or canola oil is recommended. Do not use salted fats such as butter or margarine. Pre-heat your grill to 350°-400°F (176°C-204°C). Install coated grids in the grill. Close the lid and cook for 30 minutes. Apply a second coat of oil on the grids using a silicon brush and cook for 30 minutes more. Turn all the burners to the "OFF" position and turn the gas off at the source. Let the cooking grids stand until cool. This procedure should be repeated several times throughout the season at 3-4 uses intervals.

Note: if rust has formed on the cast iron grids, clean them with a scouring pad or brass brush and repeat the entire seasoning process.

Daily Usage: Before pre-heating, and cleaning with a brass wire grill brush, coat the entire top surface of the cooking grids with VEGETABLE SHORTENING. Pre-heat the grill and then brush away any unwanted residue with a brass wire brush.

Cleaning Inside The Portable gas grill : Remove the cooking grids. Use a brass wire brush to clean loose debris from casting sides and underneath the lid. Brush all debris from inside the portable gas grill into the removable drip pan.

Drip Pan: Accumulated grease is a fire hazard. Clean the drip pan frequently to avoid grease buildup. Grease and excess drippings pass through to the drip pan, located beneath the portable gas grill and accumulate. To clean, slide the drip pan free of the grill. Never line the drip pan with aluminum foil, sand or any other material as this could prevent the grease from flowing properly. The pan should be scraped out with a putty knife or scraper.

CAUTION! Ensure drip pan is empty and clean before transporting grill in vertical position.

Cleaning The Outer Grill Surface: Do not use abrasive cleaners or steel wool on any painted, porcelain or stainless steel parts of your Napoleon Grill. Doing so will scratch the finish. Exterior grill surfaces should be cleaned with warm soapy water while the metal is still warm to the touch. To clean stainless surfaces, use a stainless steel or a non-abrasive cleaner. Always wipe in the direction of the grain. Over time, stainless steel parts discolor when heated, usually to a golden or brown hue. This discoloration is normal and does not affect the performance of the grill. Porcelain enamel components must be handled with additional care. The baked-on enamel finish is glass-like, and will chip if struck. Touch-up enamel is available from your Napoleon Grill dealer.

Maintenance Instructions

We recommend this portable gas grill be thoroughly inspected and serviced annually by a qualified service person.

At all times keep the portable gas grill area free from combustible materials, gasoline and other flammable vapors and liquids. Do not obstruct the flow of ventilation and combustion air.

WARNING! Always wear protective gloves and safety glasses when cleaning your grill.

WARNING! Turn off the gas at the source and disconnect the unit before servicing. To avoid the possibility of burns, maintenance should be done only when the grill is cool. A leak test must be performed annually and whenever any component of the gas train is replaced or gas smell is present.

Burner: The burner is made from heavy wall 304 stainless steel, but extreme heat and a corrosive environment can cause surface corrosion to occur. This can be removed with a brass wire brush.

CAUTION! Beware of Spiders.

Spiders and insects are attracted to the smell of propane and natural gas. The burner is equipped with an insect screen on the air shutter, which reduces the likelihood of insects building nests inside the burner but does not entirely eliminate the problem. A nest or web can cause the burner to burn with a soft yellow or orange flame or cause a fire (flashback) at the air shutter underneath the control panel. To clean the inside of the burner, it must be removed from the portable gas grill : Remove the screw (s) that attach the cross light bracket and the burner to the base. Slide the burner back and upwards to remove. Cleaning: Use a flexible venturi tube brush to clean the inside of the burner. Shake any loose debris from the burner through the gas inlet. Check the burner ports and valve orifices for blockages. Burner ports can close over time due to cooking debris and corrosion; use an opened paperclip to clean them. The ports are easier to clean if the burner is removed from the grill, but it can also be done with the burner installed.

CAUTION! Take care not to enlarge the holes.

Ensure the insect screen is clean, tight, and free of any lint or other debris.

Reinstallation: Reverse the procedure to reinstall the burner. Check that the valve enters the burner when installing. Replace cross light bracket and tighten screws to complete reinstallation.

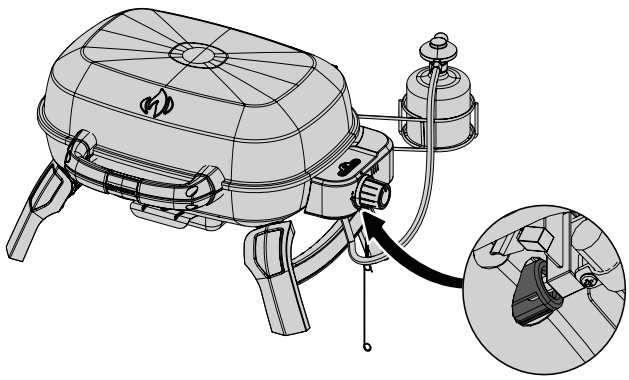

WARNING! When reinstalling the burner after cleaning it is very important that the valve/orifice enters the burner tube before lighting your portable gas grill . If the valve is not inside the burner tube a fire or explosion could occur.

CAUTION! **Check for abrasions, melting, cuts, and cracks in the hose. If any of these conditions exist, do not use the portable gas grill . Have the part replaced by your Napoleon Grill dealer or qualified gas installer.**

Troubleshooting

Problem	Possible Causes	Solution
Low heat / Low flame when valve turned to high.	Blockage of gas. Improper preheating.	Check for spider webs in the burner or orifice. Preheat grill with main burners on high for 5 to 10 minutes.
Excessive flare-ups/ uneven heat.	Improper preheating. Excessive grease and ash build up in drip pan.	Preheat grill with both main burners on high for 5 to 10 minutes. Clean drip pan regularly. Do not line pan with aluminum foil. Refer to cleaning instructions.
Burners burn with yellow flame, accompanied by the smell of gas.	Possible spider web or other debris, or improper air shutter adjustment.	Thoroughly clean burner by removing. See general maintenance instructions. Open air shutter slightly according to combustion air adjustment instructions. (This must be done by a qualified gas installer.)
Flames lift away from burner, accompanied by the smell of gas, and possibly difficulties in lighting.	Improper air shutter adjustment.	Close air shutter slightly according to combustion air adjustment instructions. (This must be done by a qualified gas installer.)
Burner will not light with the igniter, but will light with a match.	Jet-fire outlet is dirty or clogged.	Clean jet-fire outlet with a soft bristle brush.
Humming regulator.	Normal occurrence on hot days.	This is not a defect. It is caused by internal vibrations in the regulator and does not affect the performance or safety of the portable gas grill . Humming regulators will not be replaced.
“Paint” appears to be peeling inside lid or hood.	Grease build-up on inside surfaces.	This is not a defect. The peeling is caused by hardened grease, which dries into paint-like shards that flake off. Regular cleaning will prevent this. See cleaning instructions.
Burner output on “high” setting is too low. (Rumbling noise and fluttering blue flame at burner surface.)	Lack of gas. Supply hose is pinched. Dirty or clogged orifice. Spider webs or other matter in venturi tube.	Check gas level in propane cylinder. Reposition supply hose as necessary. Clean burner orifice. Clean out venturi tube.

KEEP YOUR RECEIPT AS PROOF OF PURCHASE TO VALIDATE YOUR WARRANTY.

Ordering Replacement Parts

Warranty Information

MODEL: _____

DATE OF PURCHASE: _____

SERIAL NUMBER: _____

(Record information here for easy reference)

For replacement parts and warranty claims, contact the Napoleon dealer where the product was purchased.

Before contacting the dealer, check the Napoleon Grills Website for more extensive cleaning, maintenance, troubleshooting and parts replacement instructions at **www.napoleon.com.**

To process a claim, the following information is required:

1. Model and serial number of the unit.
2. Part number and description.
3. A concise description of the problem ('broken' is not sufficient).
4. Proof of purchase (photocopy of the invoice).

In some cases, Napoleon could request to have the parts returned to the factory for inspection before providing replacement parts.

Before contacting Napoleon dealer, please note that the following items are not covered by the warranty:

- Costs for transportation, brokerage or export duties.
- Labour costs for removal and reinstallation.
- Costs for service calls to diagnose problems.
- Discolouration of stainless steel parts.
- Part failure due to lack of cleaning and maintenance, or use of improper cleaners (oven cleaner or other harsh chemicals).

CAUTION! During unpacking and assembly we recommended you wear work gloves and safety glasses for your protection. Although we make every effort to make the assembly process as problem free and safe as possible, it is characteristic of fabricated steel parts that the edges and corners might be sharp and could cause cuts if handled incorrectly.

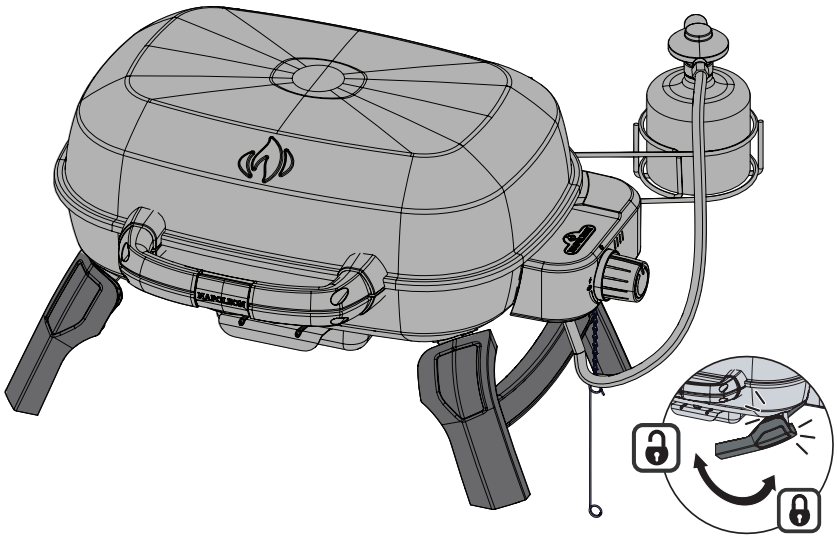

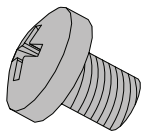

x2

N570-0140 (M5 X 12)



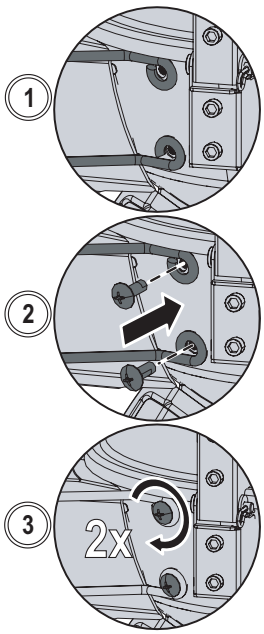

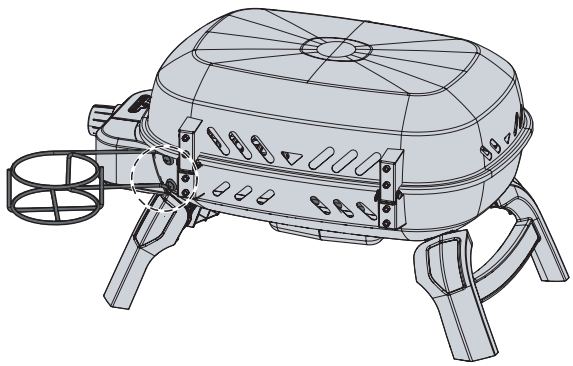

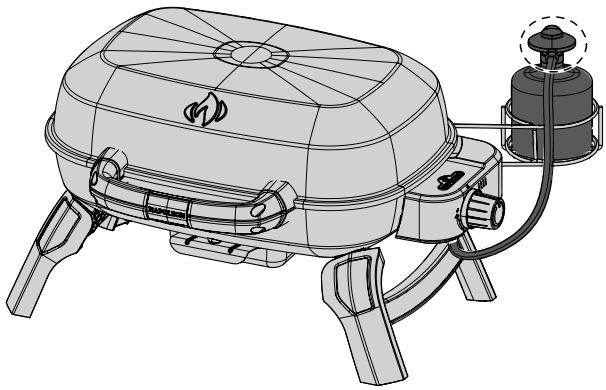

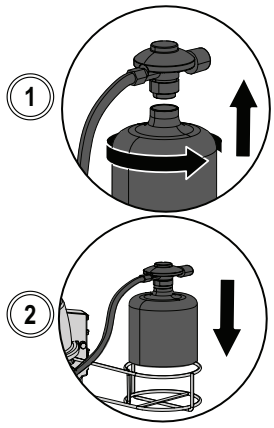

Parts list

Item	Part #	Description	TQ240
1	N010-1509-BK-SER	ASSEMBLY, LID BLACK TQ240	x
2	N305-0137-BK2FL	GRID, COOKING CAST LEFT TQ240	x
3	N305-0138-BK2FL	GRID, COOKING CAST RIGHT TQ240	x
4	N010-1512-SER	ASSEMBLY, TOP HANDLE TQ240	x
5	N010-1511-SER	ASSEMBLY, BURNER TQ240	x
6	N010-1510-BK-SER	ASSEMBLY, BASE BLACK TQ240	x
7	N010-1513-SER	ASSEMBLY, BOTTOM HANDLE TQ240	x
8	N010-1646-SER	ASSEMBLY, CONTROL PANEL 30mbar TQ240	x
	N010-1646-50-SER	ASSEMBLY, CONTROL PANEL 50mbar TQ240	
9	N010-1514-SER	ASSEMBLY, LEG TQ240	x
10	N710-0079	DRIP PAN	x
11	N380-0042	SMALL KNOB	x
12	N555-0097	MATCH LIGHTING ROD	x
13	N160-0052	TANK CLIP	x
14	N570-0140	SCREW M5 X12	x
15	N450-0054	NUT , M5	x
16	N530-0071	REGULATOR 30mbar	x
	N530-0072	REGULATOR 50mbar	
17	N255-10009266	FITTING, 90°, 1/2IN M X 1IN F	x

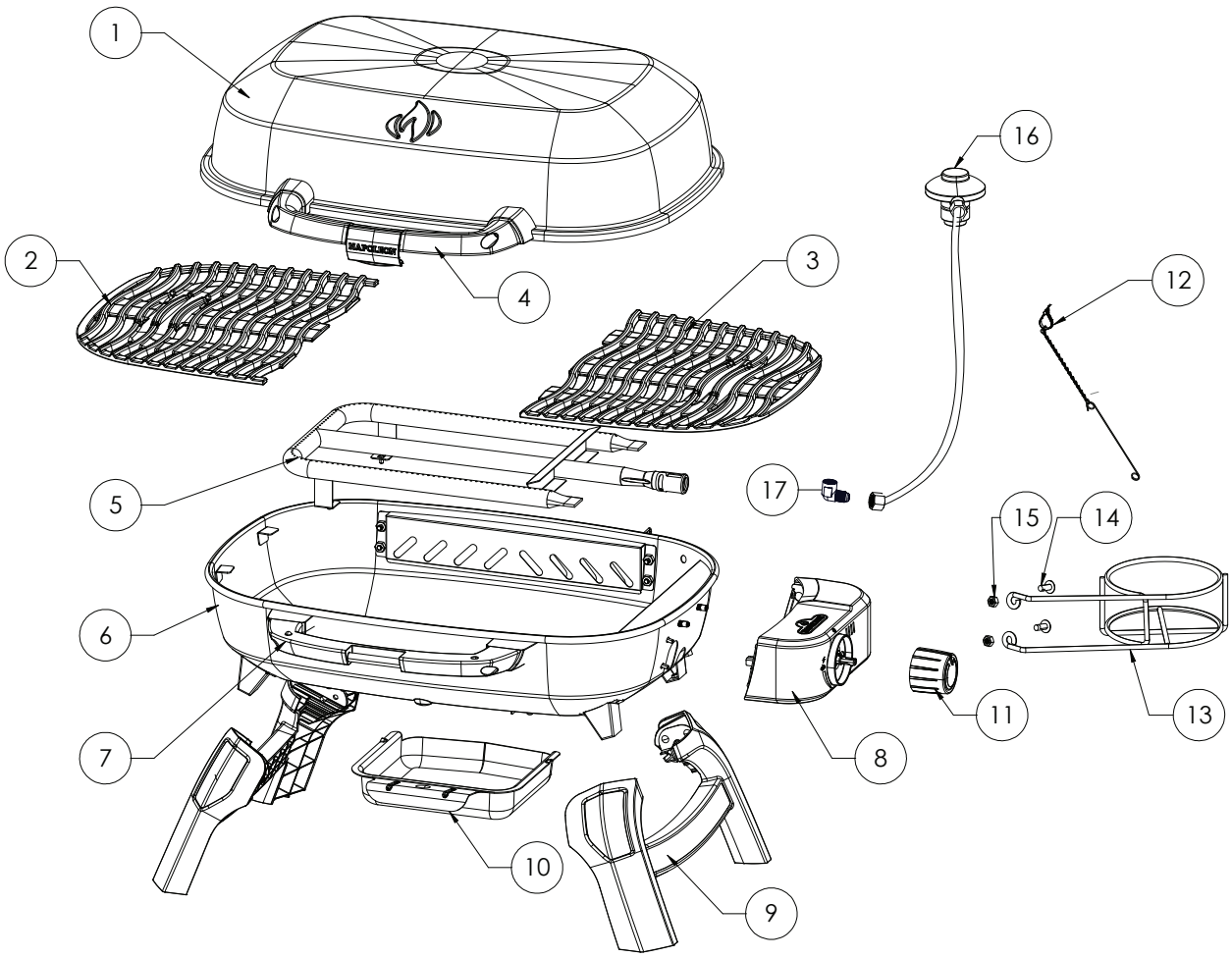

NAPOLEON® PRODUCT WARRANTY



FOR TRAVELQ™ 240 / TRAVELQ™ 285 SERIES (INCLUDING PRO285)
10 Year Napoleon® Gas Grills Limited Warranty

NAPOLEON® warrants that the components, if applicable, of your new NAPOLEON® product will be free from defects in materials and workmanship from the date of purchase for a period of:

Aluminum castings/stainless steel base	10 years
Stainless steel lid	10 years
Porcelain-enameled lid	10 years
Painted steel lid	5 years plus 10
Porcelainized cast iron cooking grids	5 years plus 10
Ceramic infrared burner (excluding mesh)	5 years plus 10
Stainless steel sear plates	5 years plus 10
Stainless steel tube burner	5 years
All other parts	2 years

Plus 10: refers to an extended warranty period, during which we supply spare part to the purchaser at 50% of the current retail price for an additional 10 years.

This warranty is valid in: the EU (European Union), EEA (European Economic Area), UK (United Kingdom), Switzerland, Andorra, San Marino, and Norway.

The customer's legal entitlements in the event of defects in accordance with WKRL - (EU) 2019/711) are not affected, restricted or altered by the present warranty. The exercise of statutory entitlements is to take place free of charge.

WARRANTY CONDITIONS AND LIMITATIONS

NAPOLEON® guarantees that its products are free from defects exclusively to the original purchaser, and only insofar as the purchase took place through an official NAPOLEON® dealer. The following conditions and restrictions apply:

The present manufacturer's warranty is not transferable nor viable for extension under any circumstances or by any of our representatives.

The gas grill must be installed by a licensed, authorized service technician or contractor. Installation must take place in accordance with the installation instructions provided, as well as all local and national building and fire codes. This limited warranty does not cover damage caused by improper operation, lack of maintenance, grease fire, environmental exposure, accidents, modification, abuse, or neglect.

The installation of spare parts from other manufacturers voids the present warranty. The discoloration of plastic elements due to the application of chemical cleaning agents or exposure to sunlight is not covered under this warranty.

This warranty also excludes any of the following: Scratches, dents, paint defects, coatings, corrosion or discoloration caused by exposure to heat or abrasive and chemical cleaners, as well as chips to porcelain-coated parts and any components used in the installation of the gas grill. If a part deteriorates to the point where it becomes inoperable (due to rusting or burning through) within the warranty period, the customer will be issued with a replacement part.

After the first year, NAPOLEON® has the authority under this warranty (10 Year Limited Warranty) to waive any warranty obligation at its free discretion by refunding the original purchaser to the tune of the wholesale price of the relevant defective warranty parts.

NAPOLEON® accepts no responsibility for any installation, labor hours or other costs or expenses associated with the reinstallation of a warranty part. Costs of this nature are not covered by the present warranty.

Notwithstanding any regulations under this warranty (10 Year Limited Warranty), NAPOLEON®'s liability under this warranty is defined by the foregoing, and does not cover any incidental, consequential, or indirect damage in any case whatsoever.

This warranty defines NAPOLEON®'s duties and liability with respect to the NAPOLEON® gas grill. NAPOLEON® assumes no further liability in connection with the sale of this product, nor does it authorize any third party to assume any other liability on its behalf.

NAPOLEON® assumes no responsibility for: Overheating, extinguishing of the flame by environmental factors such as strong winds or inadequate ventilation.

NAPOLEON® does not accept liability for any damage to the gas grill caused by the weather, hail, rough handling, aggressive chemicals or cleaning agents. Warranty claims must be accompanied by the proof of purchase or a copy thereof stating the serial and model number.

NAPOLEON® reserves the right to have the product or any part thereof inspected by one of its representatives prior to the fulfillment of any warranty obligation.

NAPOLEON® does not bear shipping costs, labor hours or export duties.

GUARANTOR:

NAPOLEON® EUROPE | WOLF STEEL EUROPE B.V.
De Riemsdijk 22 | 4004LC | Tiel | Gelderland Netherlands

+31 (0) 88 588 66 55
eu.info@napoleon.com

Notes

Notes



50 Years of Home Comfort Solutions.

NAPOLEON

NAPOLEON® products are protected by one or more U.S. and Canadian and/or foreign patents or patents pending.

Address

Wolf Steel Ltd.®

24 Napoleon Road, Barrie, Ontario, L4M 0G8 Canada

103 Miller Drive, Crittenden, Kentucky, 41030, USA

Telephone

Australia

+61 (0)756 306 837 or
1-300-361-557

Online

www.napoleon.com

N415-0699-AU | --0 | Jul.08.2026