B614
Column Support for B22

- Quick installation (one bolt to tighten)
- Design Load 800 Lbs. (3.56 kN) Slip with Safety Factor of 3
- Use with B22 and B24 Channel
- Sold in pairs
- Standard finish: ZN
- Wt./C 50 Lbs. (22.6 kg)

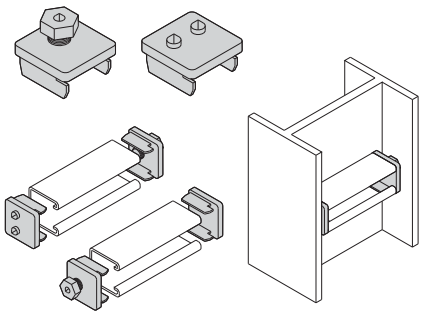

B613
Column Support for B22

- Design Load 800 Lbs. (3.56 kN) Slip with Safety Factor of 3
- Use with B22 and B24 Channel
- Setscrews to be torqued to 19 ft./Lbs
- Sold in pairs
- Standard finishes: ZN, GRN, HDG
- Wt./C 100 Lbs. (45.3 kg)

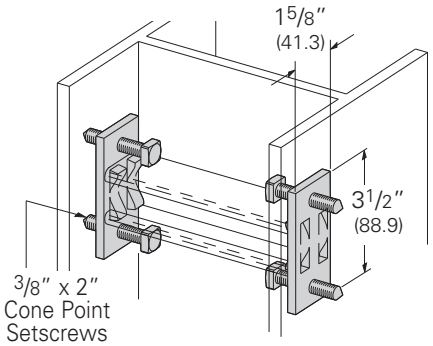

B613A
Column Support for B52

- Design Load 800 Lbs. (3.56 kN) Slip with Safety Factor of 3
- Use with B52 and B54 Channel
- Setscrews to be torqued to 19 ft./Lbs
- Sold in pairs
- Standard finishes: ZN, GRN, HDG
- Wt./C 100 Lbs. (45.3 kg)

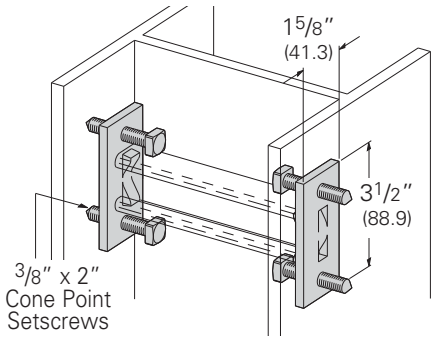

B422 Series
Right Angle Clamp

- Safety Factor of 5
- Material: 7 Gauge (4.5)
- Standard finishes: ZN, SS4

Part No.	Conduit Size In.	Conduit Size mm	A In.	A mm	Design Load Vertical Pull Lbs.	Design Load Vertical Pull kN	Wt./C Lbs.	Wt./C kg
B422-1/2	1/2″	(15)	2 3/8″	(60.3)	250	(1.11)	38	(17.2)
B422-3/4	3/4″	(20)	2 3/8″	(60.3)	300	(1.33)	39	(17.7)
B422-1	1″	(25)	2 7/8″	(73.0)	400	(1.78)	48	(21.8)
B422-1 1/4	1 1/4″	(32)	2 7/8″	(73.0)	400	(1.78)	50	(22.7)
B422-1 1/2	1 1/2″	(40)	3 1/4″	(82.5)	500	(2.22)	59	(26.7)
B422-2	2	(50)	3 11/16″	(93.7)	600	(2.67)	75	(34.0)
B422-2 1/2	2 1/2″	(65)	4 1/4″	(107.9)	700	(3.11)	98	(44.4)
B422-3	3″	(80)	4 7/8″	(123.8)	800	(3.56)	111	(50.3)
B422-3 1/2	3 1/2″	(90)	5 7/16″	(138.1)	900	(4.00)	123	(55.8)
B422-4	4″	(100)	6″	(152.4)	1000	(4.45)	135	(61.2)

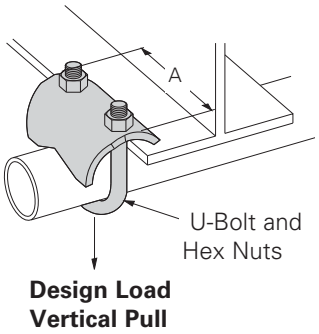

B107S
U-Support

- Material: 7 Gauge (4.5)
- Standard finishes: ZN, GRN
- Wt./C 51 Lbs. (23.1 kg)

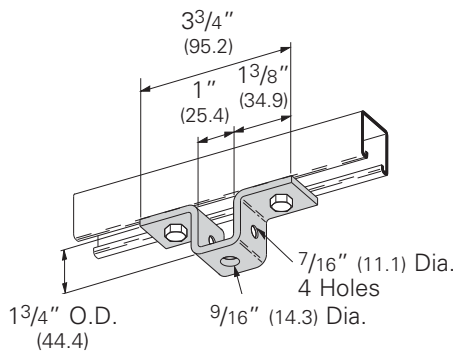

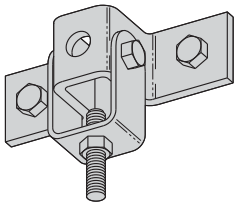

- Illustration shows B107S and B593 used together
- Design Load 900 Lbs., strength of assembly only
- Verify anchorage

B593
Clevis Swivel

- Includes:
  1 pc. 3/8″-16 x 2″ HHCS
  1 pc. 3/8″-16 Hex Nut
- Material: 11 Gauge (3.0)
- Standard finishes: ZN, GRN
- Wt./C 31 Lbs. (14.0 kg)

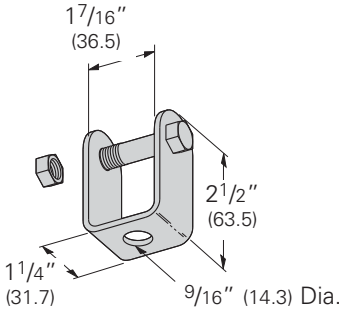

Reference page 113 for general fitting and standard finish specifications.