TANNER FULL BED
ASSEMBLY INSTRUCTIONS

MODUS FURNITURE

BOX #1

A. HEADBOARD 1 PC

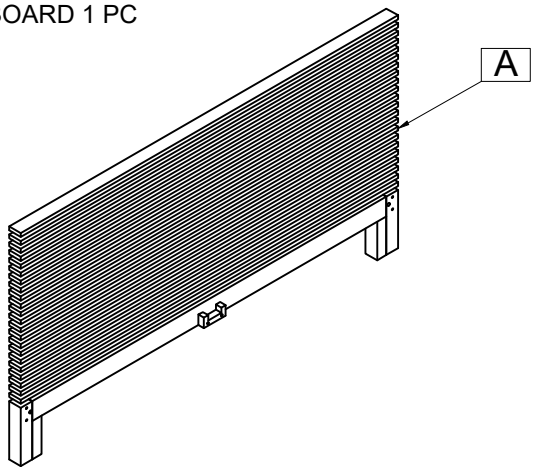

BOX #2

B. FOOTBOARD 1 PC
D. SLAT ROLL 1 SET
BED HARDWARE BOX

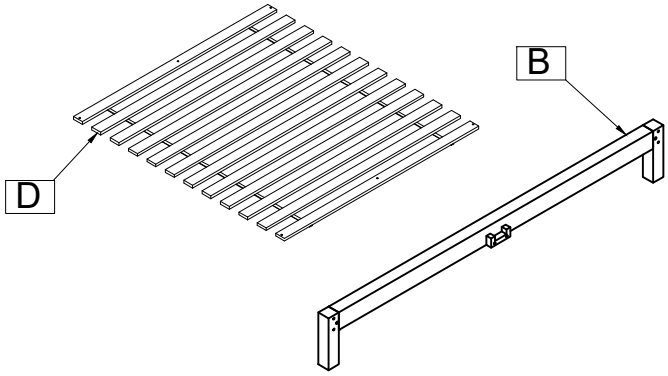

HARDWARE KIT PACKED IN BOX #2

No.	DESCRIPTION	IMAGE	QUANTITY
1	METAL DOWEL (8x40mm)		8 PCS
2	ALL- THREAD BOLT (5/16"x80mm)		4 PCS
3	THREADED HALF MOON WASHER NUT (5/16")		4 PCS
4	SPANNER		1 PC
5	WOOD SCREW (4x30mm)		8 PCS
6	ALLEN KEY		1 PC

BOX #3 :

C. SIDE RAIL 2 PCS
E. CENTER SLAT SUPPORT 1 PC
F. SUPPORT LEG 4 PCS

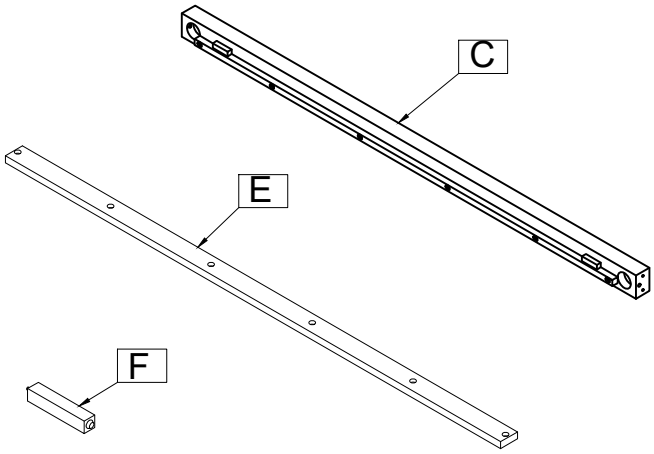

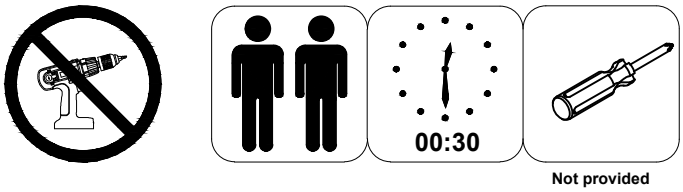

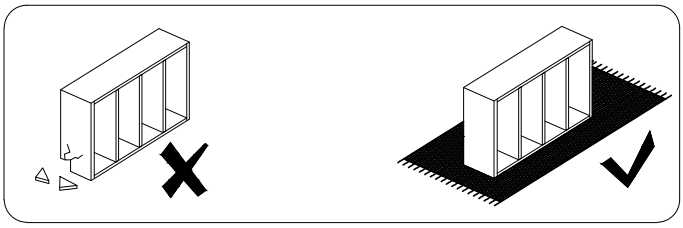

FULLY ASSEMBLED

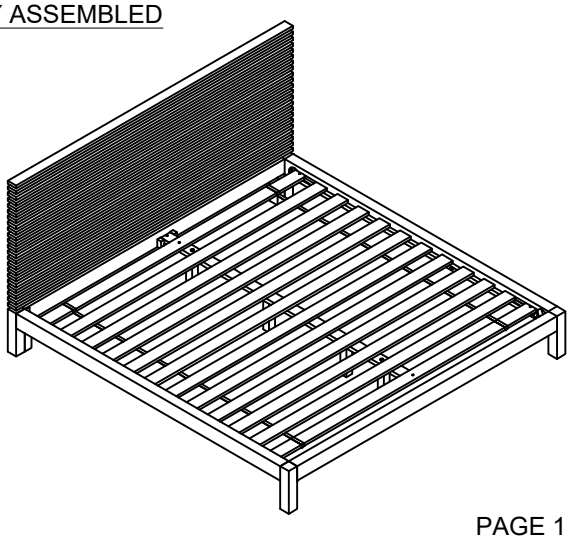

TANNER FULL BED
ASSEMBLY INSTRUCTIONS

STEP #1:

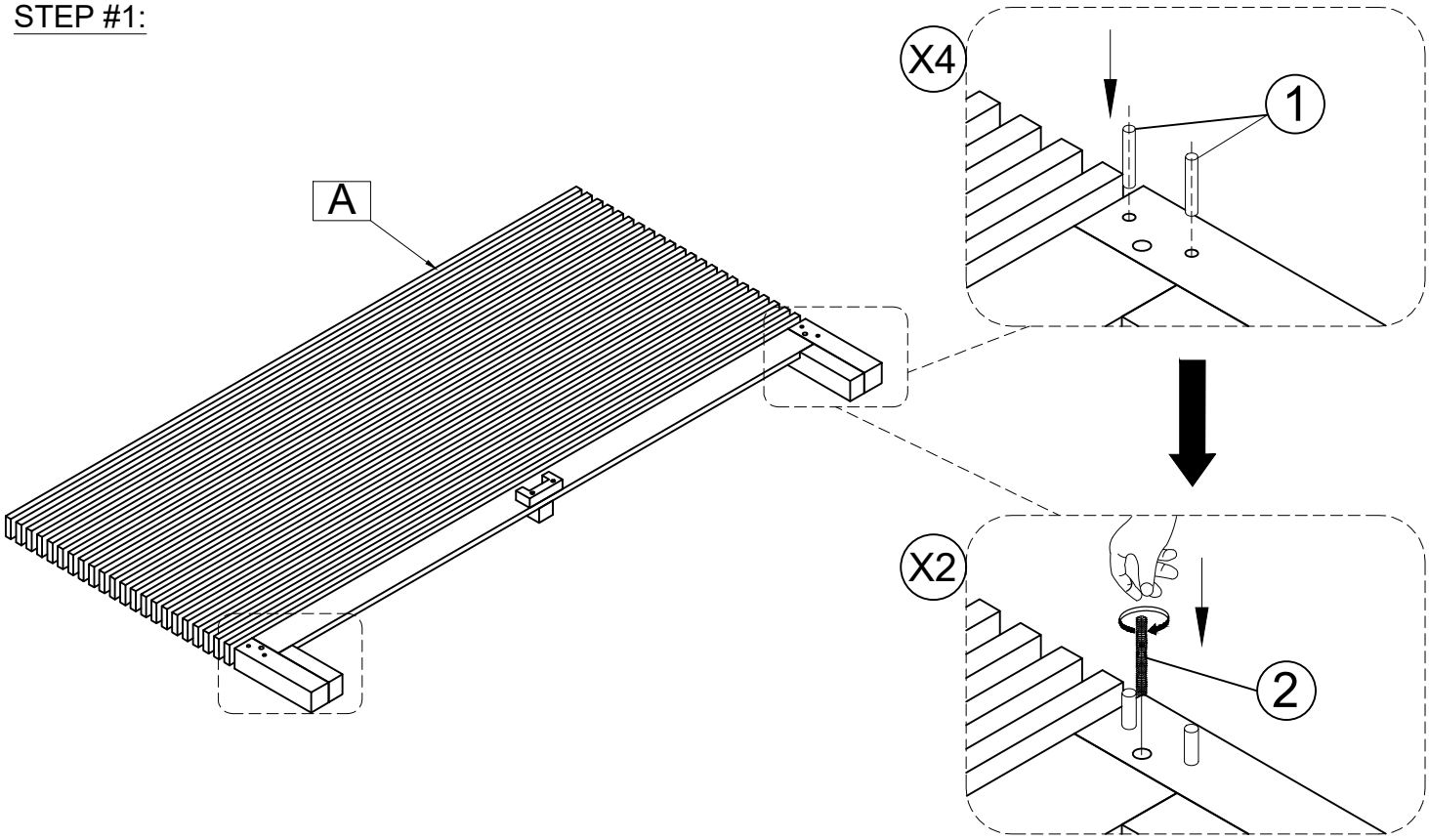

STEP #2:

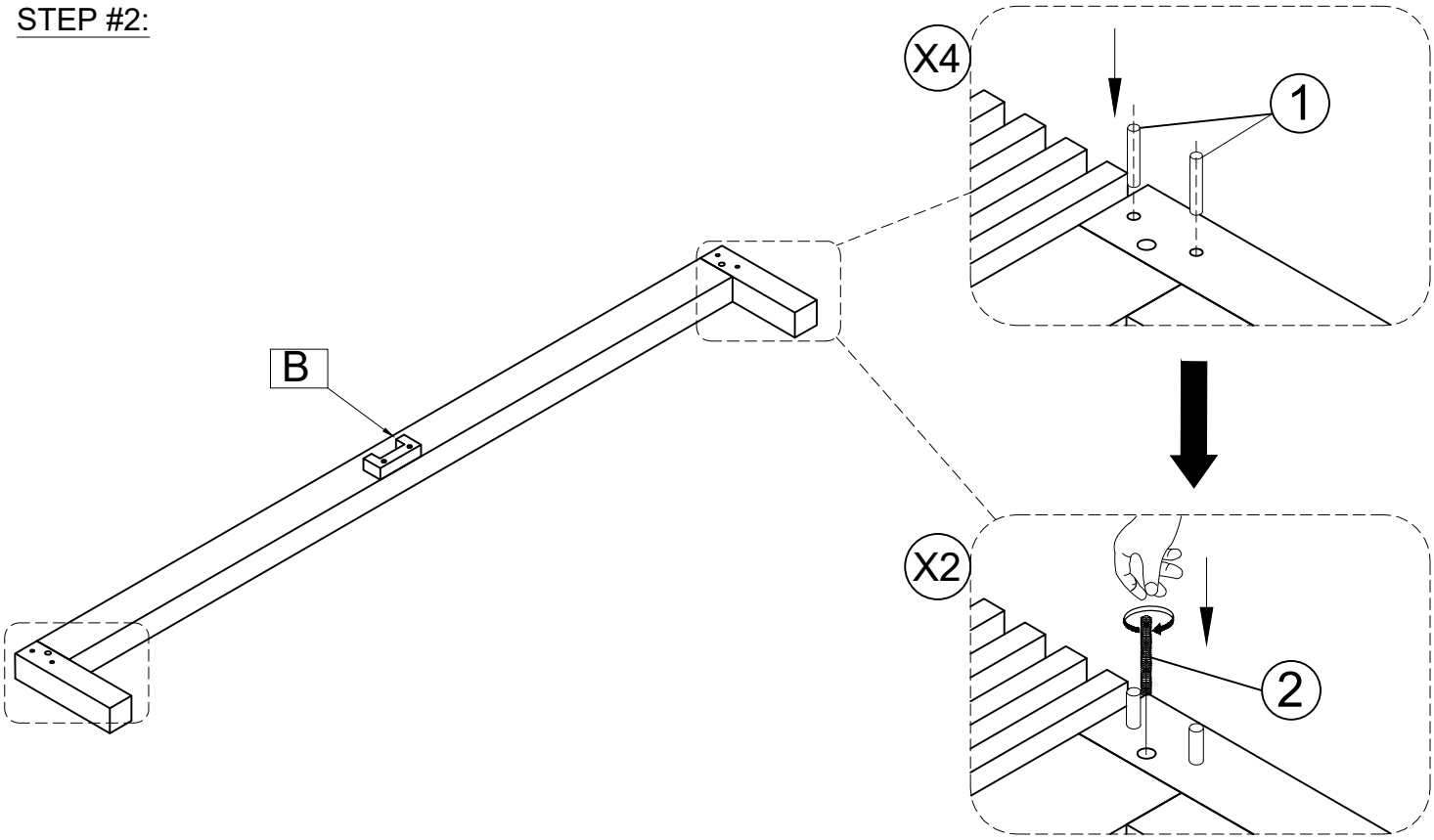

TANNER FULL BED
ASSEMBLY INSTRUCTIONS

STEP #3:

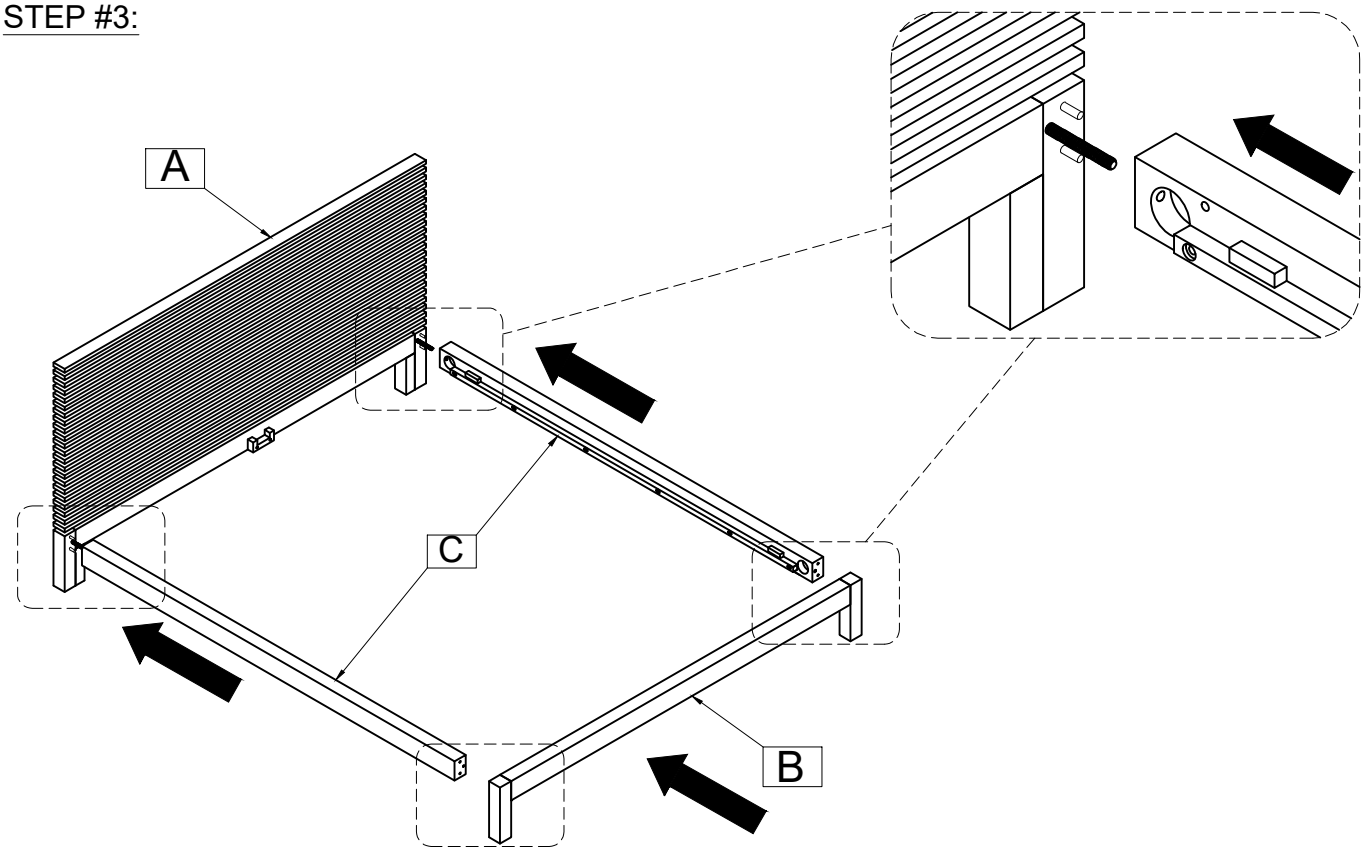

STEP #4:

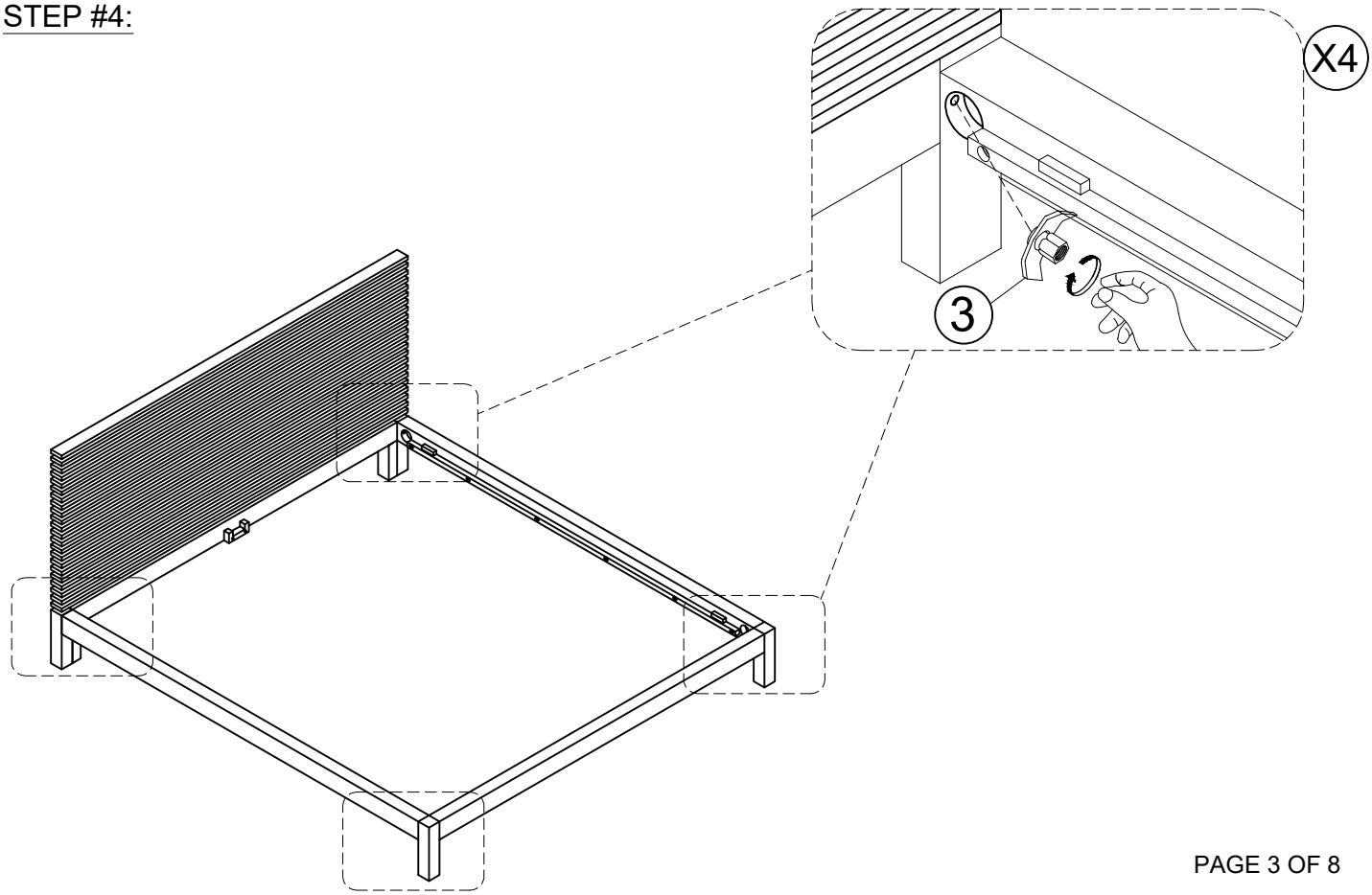

TANNER FULL BED
ASSEMBLY INSTRUCTIONS

STEP #5:

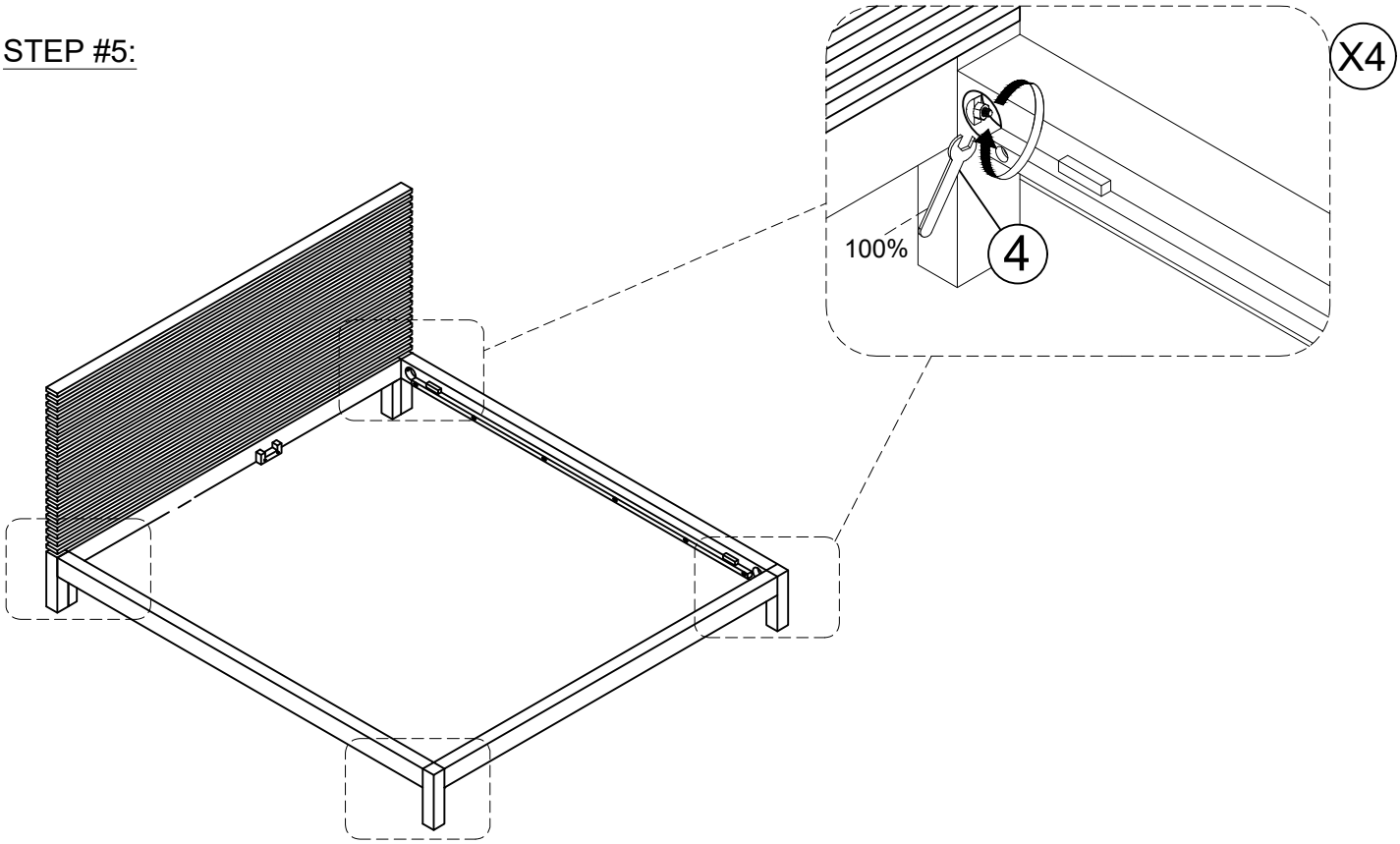

STOP

* IF USING BED FRAME WITH ADJUSTABLE MATTRESS BASE, SKIP TO APPENDIX A: ADJUSTABLE MATTRESS BASE ASSEMBLY SUPPLEMENT.
* IF USING BED FRAME WITH STANDARD BOX SPRING OR FOUNDATION CONTINUE TO STEP 6.

STEP #6:

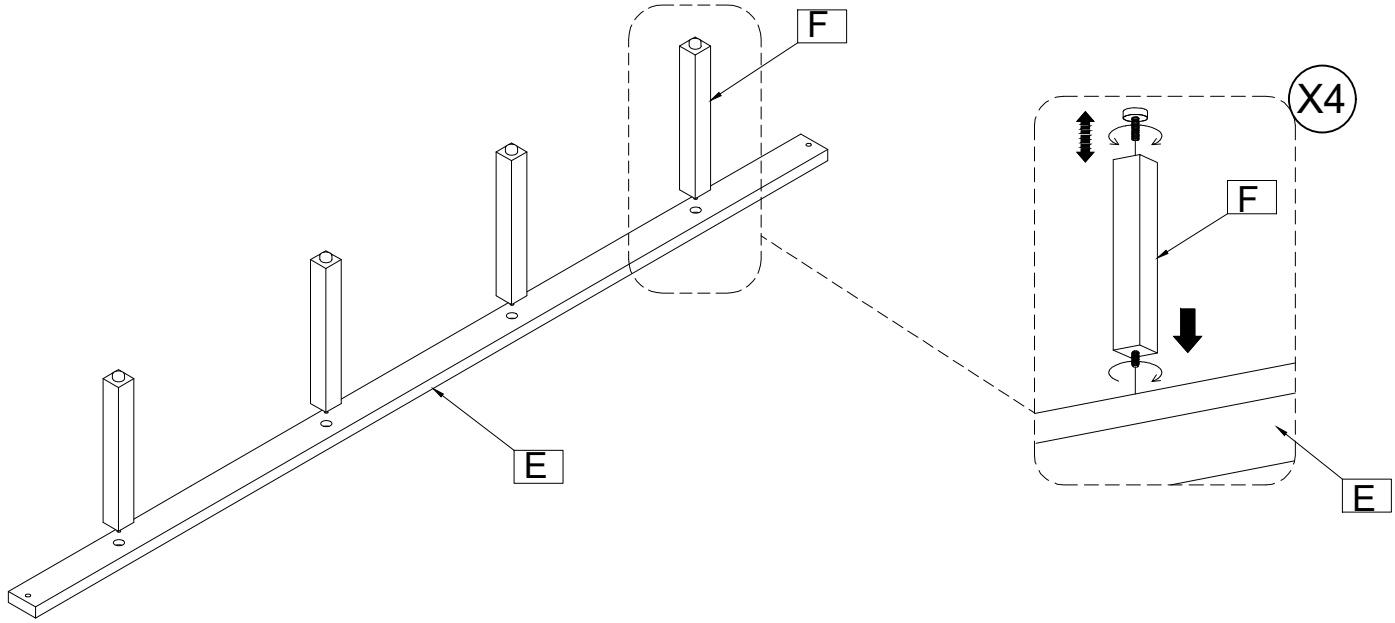

TANNER FULL BED
ASSEMBLY INSTRUCTIONS

STEP #7:

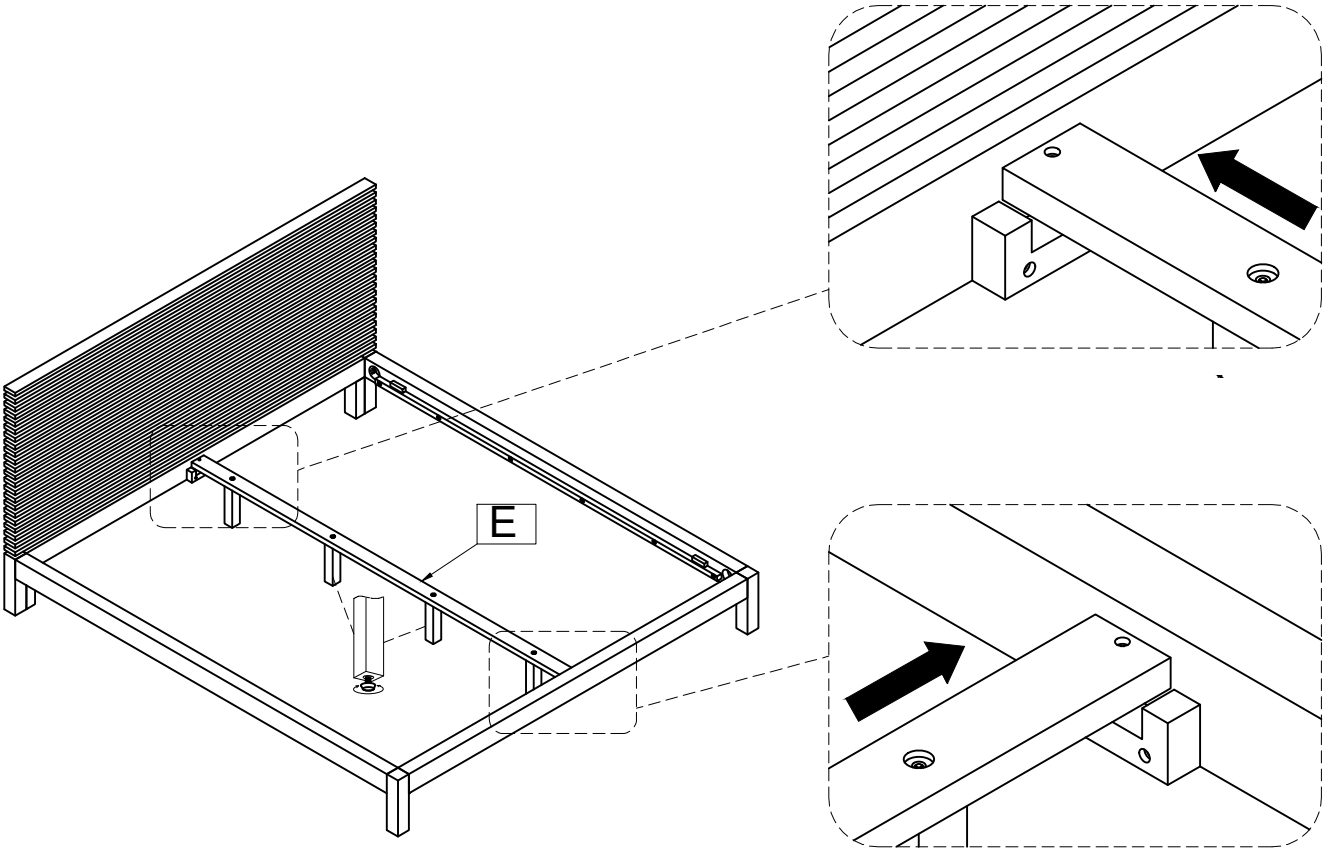

TANNER FULL BED
ASSEMBLY INSTRUCTIONS

MODUS FURNITURE

STEP #8:

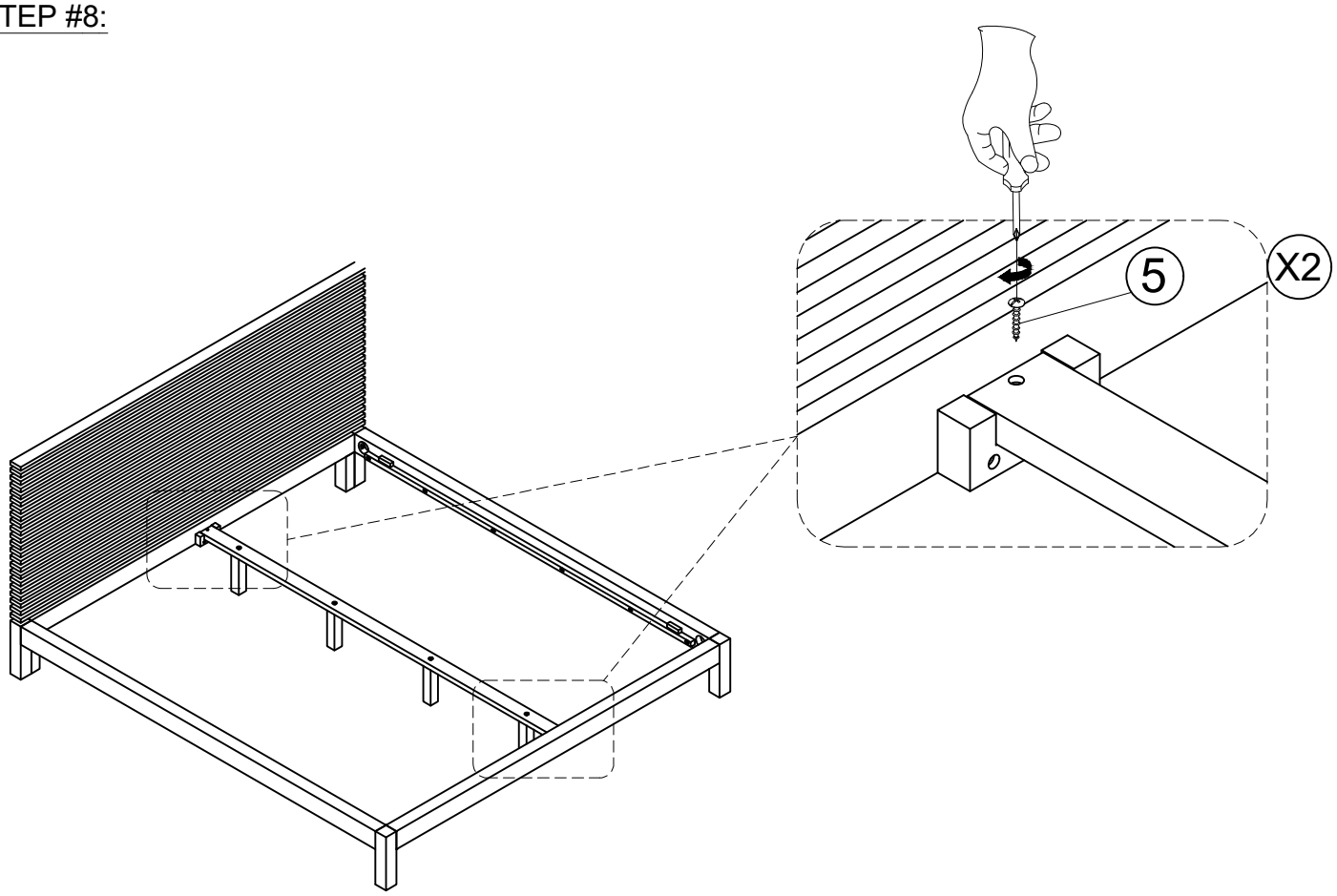

STEP #9:

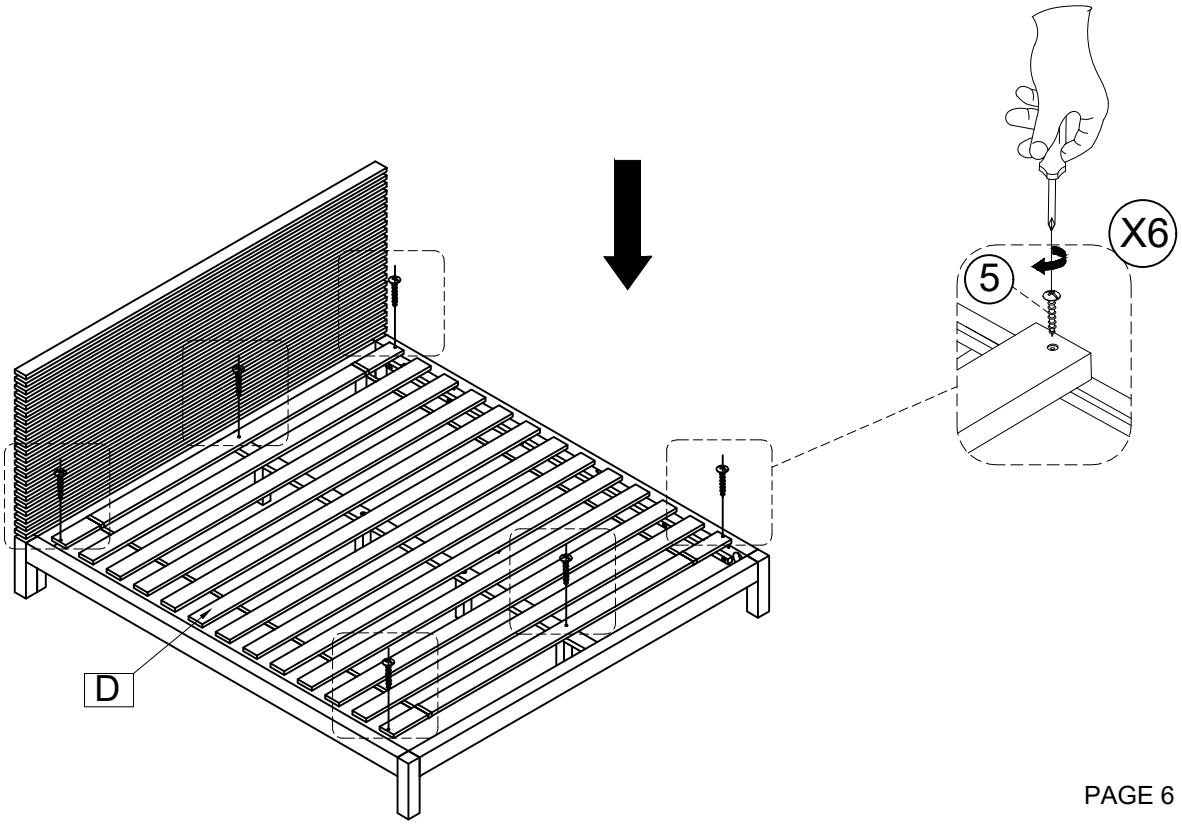

TANNER FULL BED
ASSEMBLY INSTRUCTIONS

STEP #10:

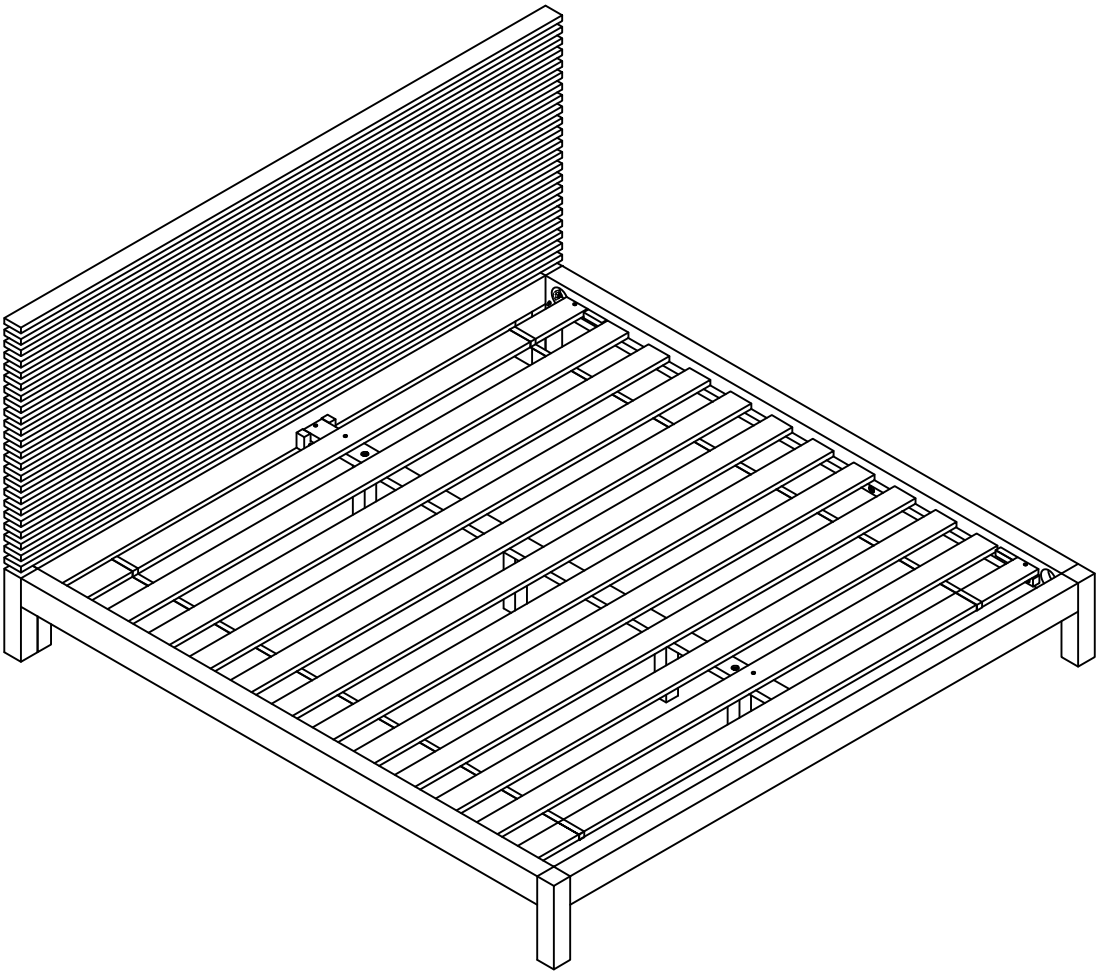

ASSEMBLY COMPLETE

INSTRUCTIONS FOR ADJUSTING LEVELER:

- POSITION THE BED IN YOUR SPACE AND LOCATE THE LEVELER UNDER EACH SUPPORT LEG.
- TURN THE LEVELER COUNTER- CLOCKWISE TO EXTEND THE LEVELER AND CLOCKWISE TO RETRACT IT.
- ADJUST EACH LEVELER UNTIL EACH SUPPORT LEG IS APPLYING EQUAL, UPWARD PRESSURE ON THE BED SUPPORT SLAT.

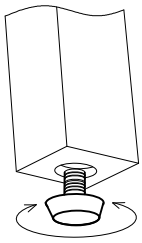

MAINTENANCE INSTRUCTIONS:

- PERIODICALLY CHECK ALL FITTINGS AND TIGHTEN IF NECESSARY, AS THEY CAN LOOSEN OVER TIME.
- ALWAYS REMOVE BOX SPRING AND MATTRESS BEFORE MOVING THE BED.
- LIFT THE BED WHEN MOVING IT. DRAGGING THE BED CAN DAMAGE THE CENTER SUPPORT.
- READJUST LEVELERS AFTER MOVING THE BED.

TANNER FULL BED
ASSEMBLY INSTRUCTIONS

APPENDIX A: ADJUSTABLE MATTRESS BASE ASSEMBLY SUPPLEMENT

AN ADJUSTABLE MATTRESS BASE IS A FREESTANDING MATTRESS SUPPORT THAT SITS WITHIN THE PERIMETER OF THE BED FRAME.

IF USING THIS BED FRAME WITH A STANDARD BOX SPRING OR FOUNDATION THESE INSTRUCTIONS DO NOT APPLY.

PRE-ASSEMBLED SIDE RAIL CLEATS OBSTRUCT ADJUSTABLE BASE INSTALLATION AND OPERATION.

FOLLOW THESE INSTRUCTIONS TO REMOVE THEM.

THE FOLLOWING PARTS ARE NOT REQUIRED FOR ADJUSTABLE MATTRESS BASE INSTALLATION:

D. SLAT ROLL 1 SET

E. CENTER SLAT SUPPORT 1 PC

F. SUPPORT LEG 4 PCS

5. WOOD SCREW (4x30MM) 8 PCS

STEP 1:

USE ALLEN KEY (6) IN BOX #2 TO UNSCREW ALLEN BOLTS AND REMOVE PRE-ASSEMBLED SIDE RAIL CLEATS.

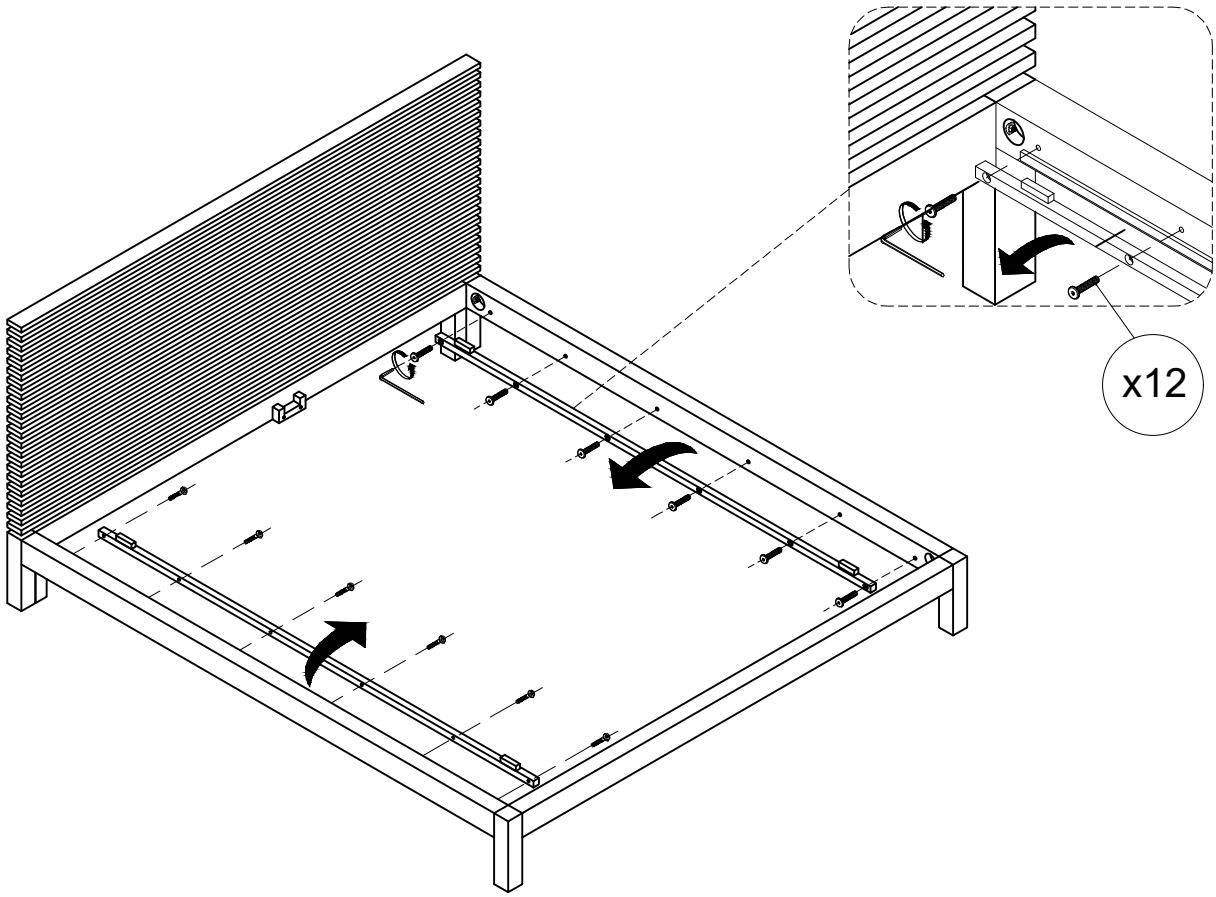

NOTE: YOU MAY WISH TO RETAIN UNUSED PARTS IF IN THE FUTURE YOU INTEND TO USE THE BED FRAME WITH A STANDARD BOX SPRING OR FOUNDATION