DAVIS & WADDELL

essentials

electric ultrasonic cleaner 400ml

DESEC05

Thank you for choosing the Davis & Waddell Electric Ultrasonic Cleaner. To ensure proper operation and to maintain the lifespan of your appliance, please read these instructions carefully before use.

A. Outer body
B. Cleaning basin
C. Transparent cover
D. Button panel
(for start/stop/setting the time)
E. Time display
F. Power connector slot
G. Power connector and cord
H. Power adapter

Parts

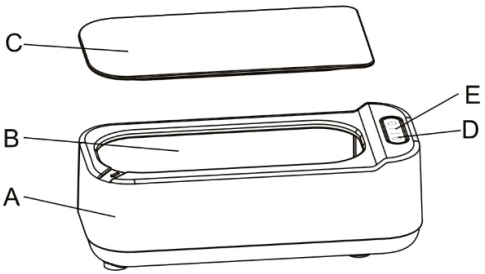

Front

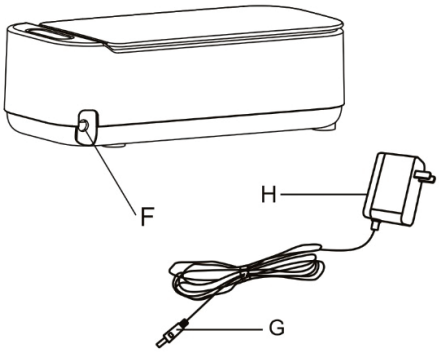

Back

Technical Parameters

Product Dimensions	202 x 96 x 63.5mm
Capacity	400ml
Net Weight	500g
Power	18W
Operating Voltage	DC 12V
Operating Time	3-5 minutes

Safety First

- Please do not attempt to disassemble the product. This should only be done by professional technicians.
- Do not plug in the appliance to the power supply before adding water. The amount of water added should not exceed the water level line marked in the basin to avoid overflow.
- Do not touch the plug with wet hands to avoid electric shock.
- Do not immerse the product in water to avoid electric shock.
- Repeated cleaning can make items cleaner but ensure an interval of 5 minutes between each subsequent cleaning.
- Do not use this product while sleeping or dozing off.
- The appliance is not to be used by persons (including children) with reduced physical, sensory or mental capabilities, or lack of experience and knowledge, unless they have been given supervision or instruction
- Children supervised are not to play with the appliance.
- The appliance must only be supplied at Safety Extra Low Voltage
- The appliance can only be used with the supplied adaptor
- Avoid spillage on the power connector slot to avoid damage to the product

How the Cleaner Works

- When the cleaner is switched on, ultrasonic waves are sent through the water.
- The pressure exerted by these sound waves causes vapour bubbles to form as vibrations travel through the water.
- Millions of these tiny bubbles are generated every second, which burst continuously under the action of the high frequency vibrating ultrasonic waves.
- The strong impact and suction generated by the low-pressure bubbles breaks the stubborn dirt on object surfaces into small particles, which settle down in the water.
- This ultrasonic cleaner is ideal for use in cleaning items such as:
- Office supplies – ink cartridges, ink stamps, pen nibs etc.
- Daily necessities – toothbrushes, razors, dentures
- Tableware and small parts – metal cutlery, coins, gears, metal accessories etc.
- Glasses – sunglasses, spectacles
- Jewellery – rings, necklaces, bracelets, earrings etc.

Operating Instructions

1. Lift the transparent cover and add tap water to the stainless-steel basin. Make sure the water does not exceed the MAX level indicated in the basin CAUTION: Starting the cleaner without adding water will damage the appliance.
2. Place the items to be cleaned into the water. The items or parts of items that require cleaning should be completely immersed in the water. For larger items, please clean them in sections (refer to the illustrations).
3. Replace the transparent cover and insert the power connector into the slot. Insert the power adapter into the mains and switch on the power.
4. When the power supply is switched on, the two indicator lights will glow, and the time display will show a default of 3 minutes. If there is no operation for 15 seconds, the appliance will automatically power off.
5. Press the timer button to set a working time of 3 minutes or 5 minutes. The time display will show the selected time. Press the Start/Stop button to start the cleaner.
6. If the Start/Stop button is pressed any time during the cleaning process, the machine will pause. Press the Start/Stop button again to restart the process.
7. After cleaning, switch off and disconnect the power and lift the transparent cover. Take out the clean items and wipe them dry with a clean, soft cloth. Pour out the water in the basin and wipe it clean.

Tip: For more intense cleaning or sterilising items, add a few drops of household hand sanitiser or other cleaning liquid (about 5-10ml) to the water in the basin before switching on the cleaner. Stir the mixture till the liquids are mixed well and follow the operating procedure as normal.

For extra effective cleaning, a few drops of ultrasonic cleaning solution can be added to the water bath before running. This is best suited to jewellery, glasses and watches.

Care and Maintenance

- Do not use the cleaner for items with sharp edges and angles. This can scratch the basin.
- After each use, always make sure to pour out the water in the basin and dry the basin and outer body with a clean dry cloth.
- Always clean the outer body with a dry cloth only. Do not immerse the appliance in water or it may short circuit.
- Keep this appliance in a cool, ventilated and dry environment.
- Keep out of reach of children.
- Please ensure any jewellery being cleaned does not have loose gemstones.
- Please ensure any watches being submerged are waterproof. We recommend only submerging the band and leaving the watch face above the waterline.

Tip: For extra effective cleaning, a few drops of ultrasonic cleaning solution can be added to the water bath before running. This is best suited to jewellery, glasses and watches.

Troubleshooting

Problem	Possible Cause	Solution
The Start/Stop button is pressed but the machine does not switch on.	The power adapter may not be plugged into the mains correctly.	Insert the power adapter into the socket correctly.
	The power adapter may be damaged.	Send the machine back to the seller for a replacement.
The items are not cleaned sufficiently enough.	The basin has not been filled with enough water.	Add enough water so the items are properly submerged, or fill the basin to the MAX line
	Additional cleaning solution may need to be added.	Add a few drops of sanitiser or cleaning liquid to the water and repeat the process.

Our 12 Month Guarantee

Our goods come with guarantees that cannot be excluded under the Australian Consumer Law. You are entitled to a replacement or refund for a major failure and compensation for any other reasonably foreseeable loss or damage. You are also entitled to have the goods repaired if the goods fail to be of acceptable quality and the failure does not amount to a major failure.

We stand by this product. Therefore we offer a 12 month guarantee on this Electric Ultrasonic Cleaner. The benefits of this guarantee are in addition to any rights and remedies imposed by Australian Consumer Law. Our guarantee excludes normal wear and tear and instances where care and use instructions have not been followed.

What IsAlbi will do: During this guarantee period IsAlbi will repair, replace or refund any defective product. If identical product is not available for replacement, a similar product may be offered. IsAlbi asks you to cover the cost of postage/transit if the product needs to be sent back to us for inspection. If IsAlbi deems the product is defective, we will reimburse your postage/transit expenses. IsAlbi will be responsible for the postage/transit of the repaired/replacement product back to you.

What to do: If a fault/defect is identified cease using the product immediately.
To make a claim on this guarantee, take the product, proof of purchase and full details of the alleged defect to the retailer from whom the product was purchased. If you cannot access the retailer or are unsatisfied with the solution offered by the retailer contact IsAlbi via the details below.

IsAlbi

87 Chifley Drive, Preston, Victoria 3072
P: +61 (03) 9474 1300
E: enquiries@isalbi.com.au
isalbi.com.au