Manufactured by:
Backyard Discovery
3305 Airport Drive, Pittsburg, KS 66762
800-856-4445

Basepoint Business Centre: Rivermead Drive,Westlea, Swindon SN5 7EX Phone: 0800-118-2476
J.P. Coenstraat 7, The Bridge, The Hague, 2595 WP, Netherlands Phone: 08005678990

PAXTON 4-6P BARREL SAUNA WITH PORCH

MODEL # : 2504448B, 2504448B-V

THE ASSEMBLY MANUAL MUST BE RETAINED SINCE IT CONTAINS IMPORTANT INFORMATION

LICENSED ELECTRICIAN WORK IS REQUIRED TO INSTALL A DEDICATED 240V/50AMP CIRCUIT



Please visit www.backyarddiscovery.com

For the most up to date assembly manual, to register your product, or to order replacement parts *Para obtener instrucciones en español, visite www.backyarddiscovery.com*

EASY STEP-BY-STEP
3D INTERACTIVE INSTRUCTIONS
DOWNLOAD THE FREE APP

OWNER'S MANUAL - BASIC SETUP DIMENSIONS AND ASSEMBLY NOTES

CHOOSE A GOOD LOCATION FOR YOUR SAUNA!

It is critically important the sauna foundation is sturdy and level.
An unstable foundation can cause the sauna to tilt, shift, or fall, leading to injury.
Pay close attention to the items needed for each step. Make sure you are using the correct hardware for each step.

- Using incorrect hardware may result in improper assembly.
- Ensure the surface is firm and level and can support the weight of the sauna and its users. (1000+ lbs.)
- Many garages, basements or deck floors are sloped for drainage. A slight slope will not be an issue. A more pronounced slope will require shimming to make the sauna level.
- Consider a concrete slab, paver stones, or something similar to prevent the cradle supports from settling in the ground. Concrete anchors are provided in the kit.
- If installing on the ground or gravel surface, ground anchors are included in the kit.
- If installing on a deck, confirm there is ample structural support under the deck. The hardware to mount to a wood deck is NOT included and will need to be purchased separately.
- Consider distance from your electrical service box as this can greatly impact the cost of needed electrical work
- If located in an area that tends to receive high winds, it is recommended to take extra precautions to ensure the door does not blow open. In most situations, this should not be a concern.

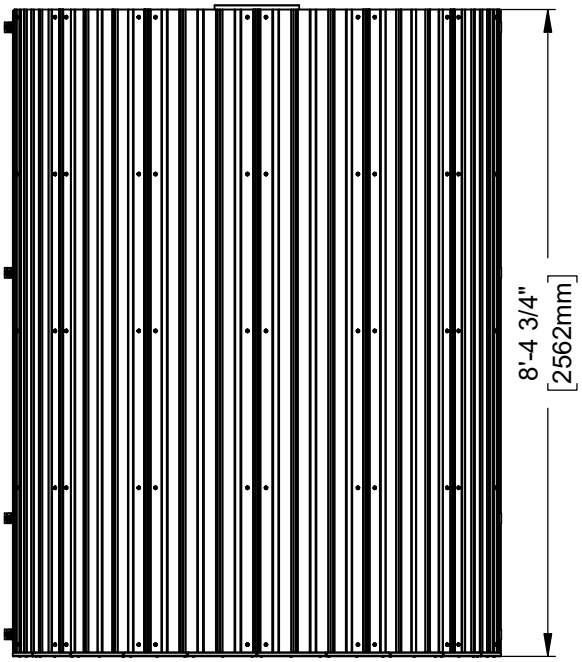

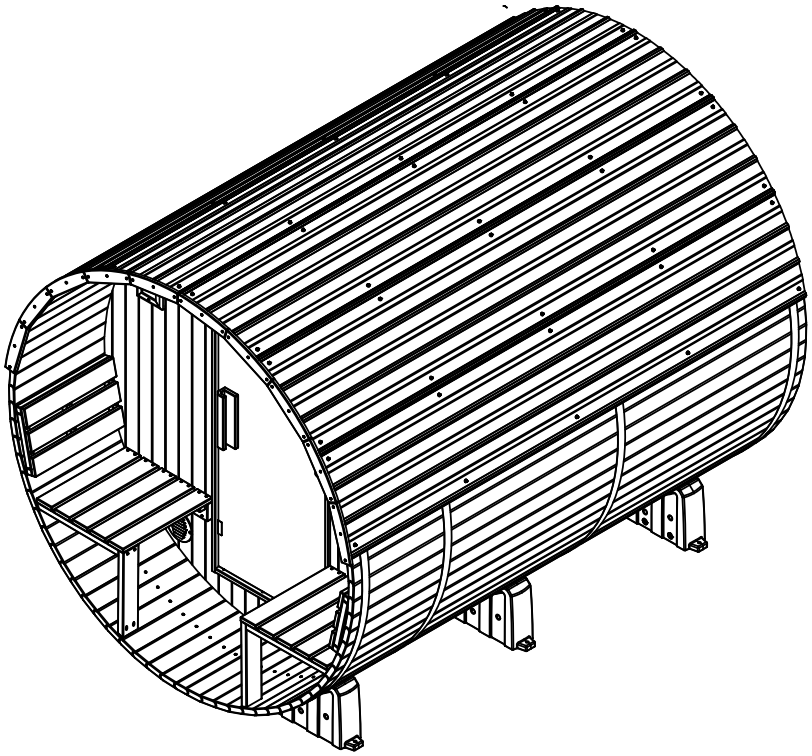

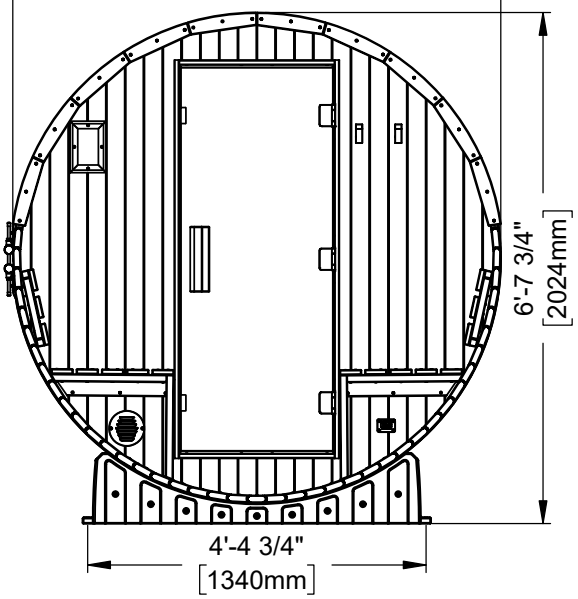

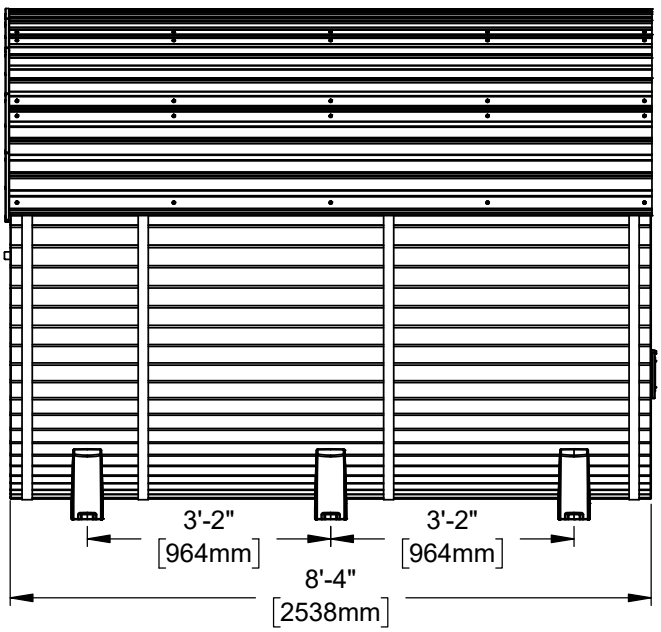

OWNER'S MANUAL - ANCHORING LAYOUT

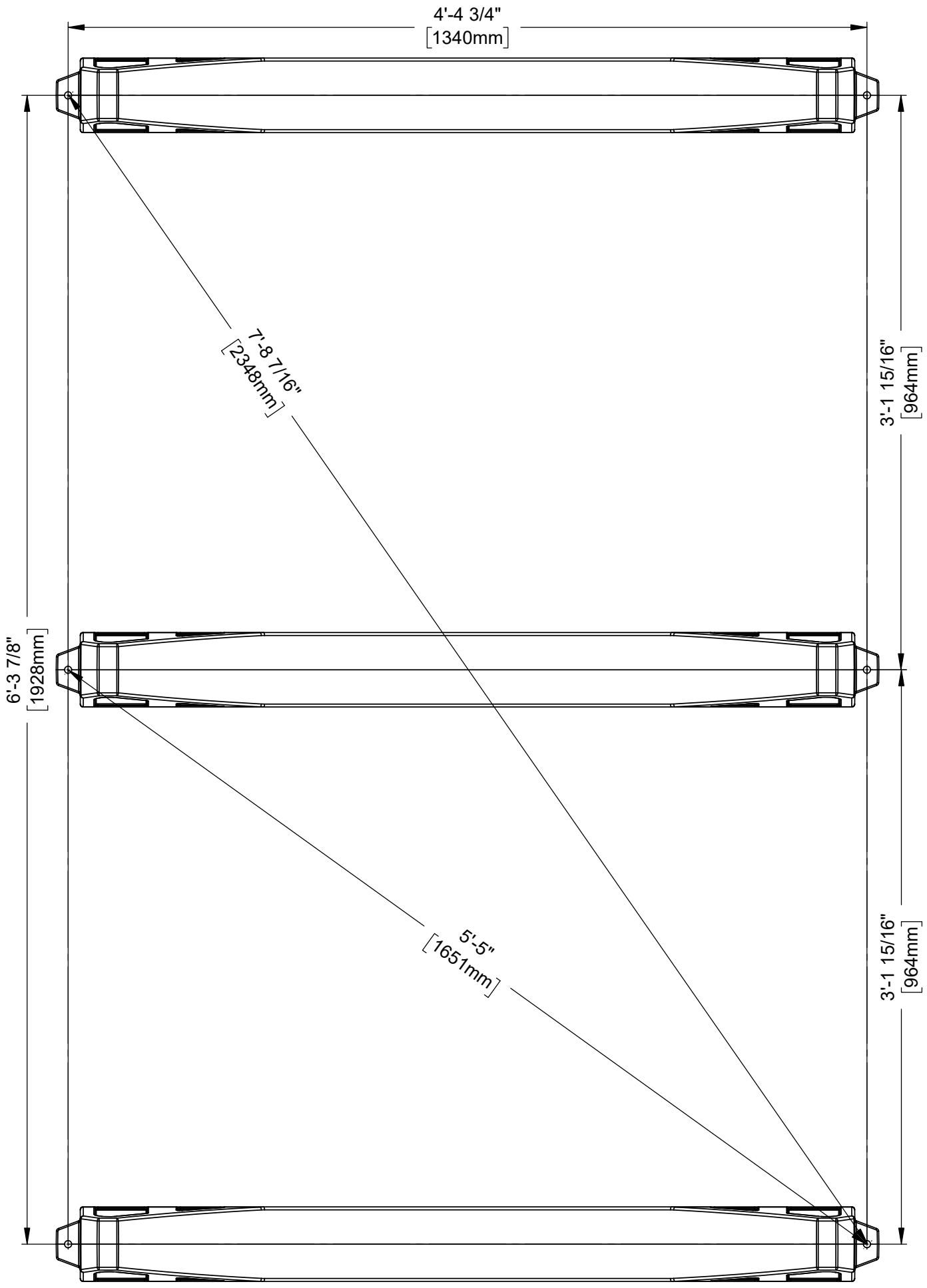

OWNER'S MANUAL - PARTS IDENTIFICATION

WOOD COMPONENTS (NOT TO SCALE)

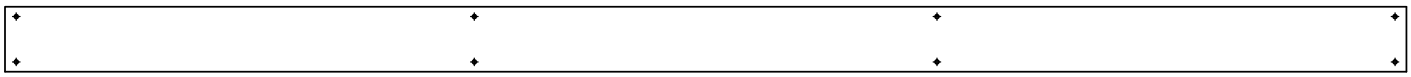

AK01 WIREWAY COVER-W4L22562
(x1) 5/16"x3 3/8"x73" (8x86x1854)

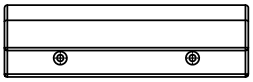

AM01 DOOR HANDLE-W4L21861
(x1) 2 1/4"x3"x10 3/16" (57x76x258)



NR01 HEATER GUARD BOARD-W4L21872
(x5) 13/16"x2 3/8"x23 15/16" (20x60x608)

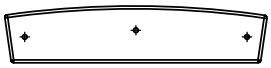

NR02 TRIM BOARD-W4L21866
(x10) 13/16"x2 3/8"x10 15/16" (20x60x278)



NR03 HEATER GUARD BOARD-W4L21874
(x10) 13/16"x2 3/8"x16 9/16" (20x60x420)



OB01 PERIMETER BOARD-W4L23466
(x1) 1 3/16"x3"x99 15/16" (30x76x2538)

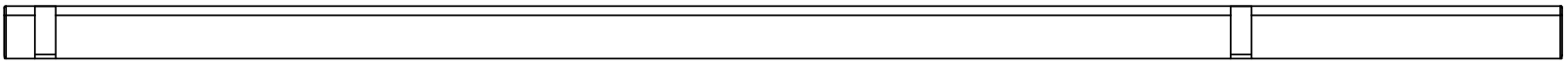

OG01 PERIMETER BOARD-W4L21988
(x23) 1 3/16"x3 3/8"x99 15/16" (30x86x2538)



OG02 PERIMETER BOARD-W4L23467
(x7) 1 3/16"x3 3/8"x99 15/16" (30x86x2538)



OG03 PERIMETER BOARD-W4L21990
(x7) 1 3/16"x3 3/8"x99 15/16" (30x86x2538)



OG04 BENCH BRACE-W4L21860
(x6) 1 3/16"x3 3/8"x16 3/8" (30x86x416)

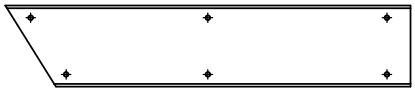

OG05 WALL CLEAT-W4L21862
(x2) 1 3/16"x3 3/8"x16 7/8" (30x86x429)

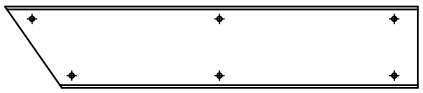

OG06 WALL CLEAT-W4L21863
(x1) 1 3/16"x3 3/8"x17 3/16" (30x86x437)



OG07 WALL CLEAT-W4L21867
(x1) 1 3/16"x3 3/8"x63 15/16" (30x86x1624)

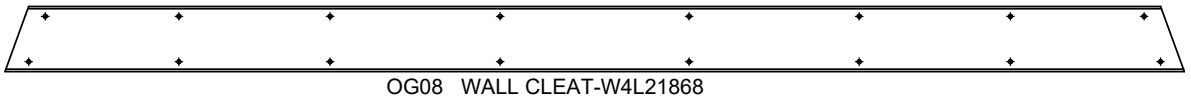

OG08 WALL CLEAT-W4L21868
(x1) 1 3/16"x3 3/8"x61 7/16" (30x86x1560)



OG09 WALL CLEAT-W4L21909
(x2) 1 3/16"x3 3/8"x18 7/8" (30x86x480)

OWNER'S MANUAL - PARTS IDENTIFICATION

WOOD COMPONENTS (NOT TO SCALE)



OG12 WIREWAY BOARD-W4L21999
(x1) 1 3/16"x3 3/8"x35 3/16" (30x86x894)

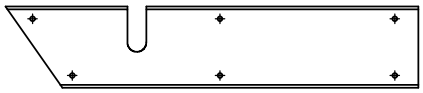

OG13 WALL CLEAT-W4L22019
(x1) 1 3/16"x3 3/8"x17 3/16" (30x86x437)



OG14 WIREWAY BOARD-W4L23473
(x1) 1 3/16"x3 3/8"x73" (30x86x1854)

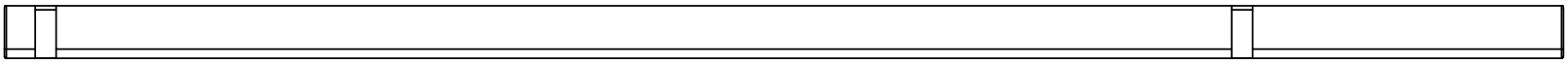

OG15 PERIMETER BOARD-W4L23468
(x23) 1 3/16"x3 3/8"x99 15/16" (30x86x2538)

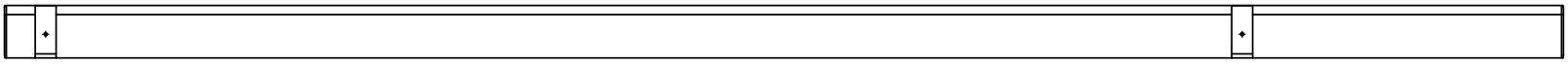

OG16 PERIMETER BOARD-W4L23563
(x7) 1 3/16"x3 3/8"x99 15/16" (30x86x2538)

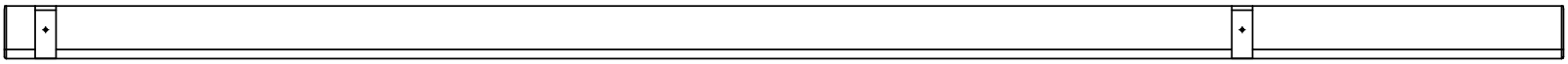

OG17 PERIMETER BOARD-W4L23564
(x7) 1 3/16"x3 3/8"x99 15/16" (30x86x2538)



OO02 HEATER GUARD BOARD-W4L21875
(x2) 1 3/16"x1 3/16"x21 7/16" (30x30x544)



OO03 FLOOR CLEAT-W4L21964
(x1) 1 3/16"1 3/16"20 7/8" (30x30x530)



OO04 HEATER GUARD BOARD-W4L21871
(x2) 1 3/16"x1 3/16"x21 7/16" (30x30x544)



OO05 FLOOR SUPPORT-W4L21963
(x2) 1 3/16"x1 3/16"x20 7/8" (30x30x530)



OR01 GUARD MOUNTING BOARD-W4L21873
(x2) 1 3/16"x2 3/8"x23 15/16" (30x60x608)

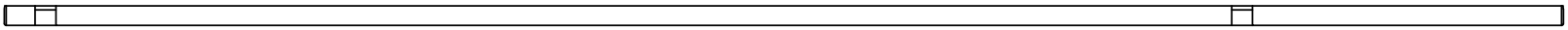

OR02 PERIMETER BOARD-W4L23469
(x1) 1 3/16"x1 1/4"x99 15/16" (30x32x2538)

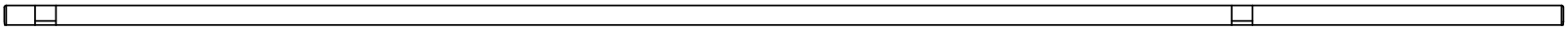

OR03 PERIMETER BOARD-W4L23470
(x1) 1 3/16"x1 1/4"x99 15/16" (30x32x2538)



OV01 HEATER GUARD SPACER-W4L21887
(x2) 1 3/16"x4 7/16"x23 15/16" (30x112x608)

OWNER'S MANUAL - PARTS IDENTIFICATION

WOOD COMPONENTS (NOT TO SCALE)

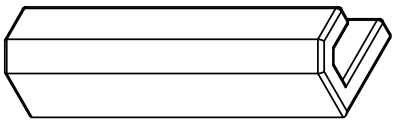

AM02 DOOR HANDLE-W2A04795
(x1) 2 1/4"x3"x10 3/16" (57x76x258)

BA01 RIGHT BENCH ASSEMBLY-W2A04826
(x1) 1 15/16"x19 1/8"x75 1/4" (50x486x1912)

BA03 OUTSIDE BENCH ASSEMBLY-W2A04806
(x1) 1 15/16"x19 1/8"x19 3/4" (50x486x502)

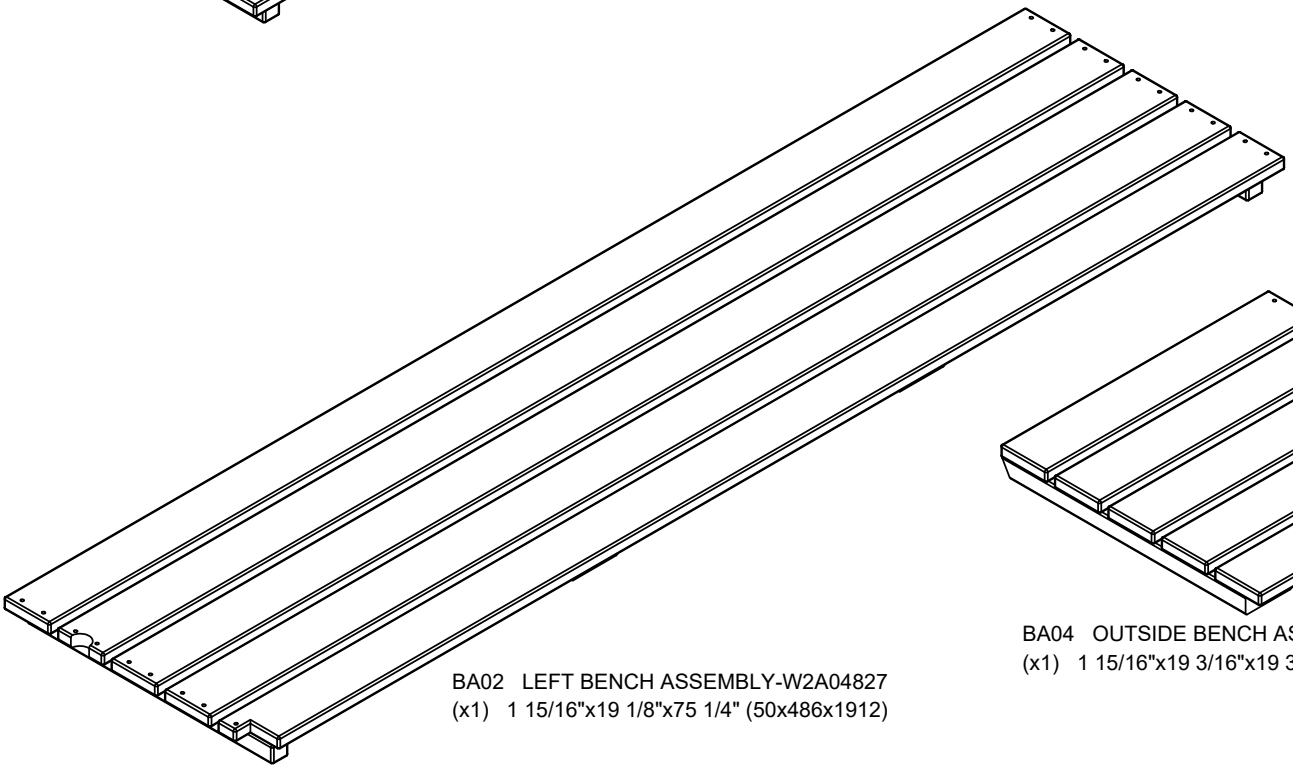

BA02 LEFT BENCH ASSEMBLY-W2A04827
(x1) 1 15/16"x19 1/8"x75 1/4" (50x486x1912)

BA04 OUTSIDE BENCH ASSEMBLY-W2A04808
(x1) 1 15/16"x19 3/16"x19 3/4" (50x487x502)

OWNER'S MANUAL - PARTS IDENTIFICATION

WOOD COMPONENTS (NOT TO SCALE)

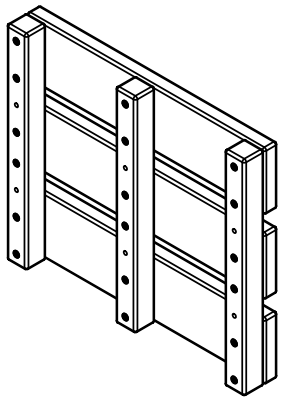

BR01 WALL BACK REST-W2A04790
(x2) 1 15/16"X12 1/16"X14" (50x306x356)

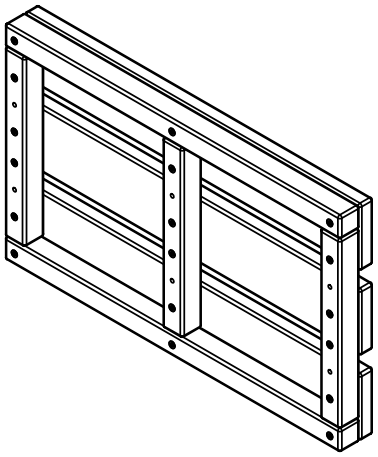

BR03 BENCH BACK REST-W2A04807
(x2) 1 15/16"x12 1/16"x19 3/4" (50x306x502)

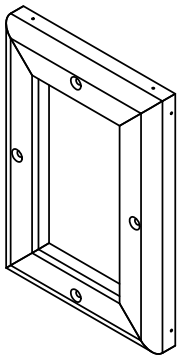

TF01 TRIM FRAME-W2A04797
(x1) 7/8"x5 9/16"x8 1/16" (22x142x204)

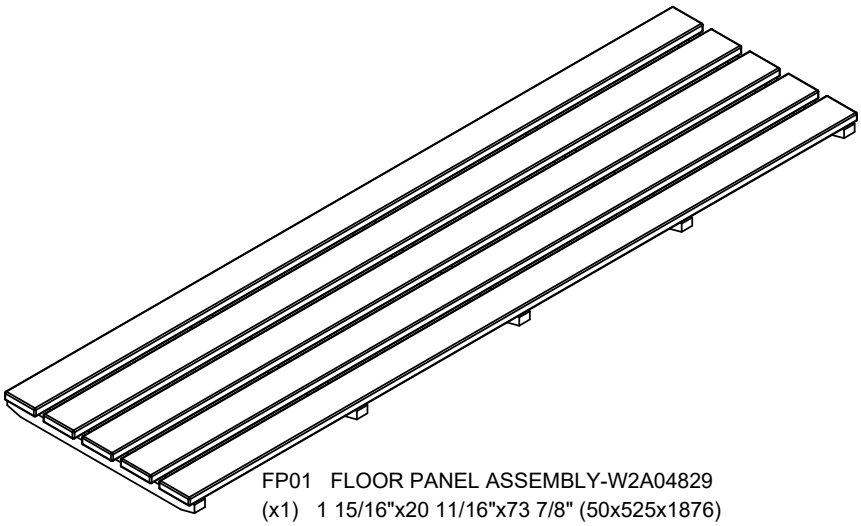

FP01 FLOOR PANEL ASSEMBLY-W2A04829
(x1) 1 15/16"x20 11/16"x73 7/8" (50x525x1876)

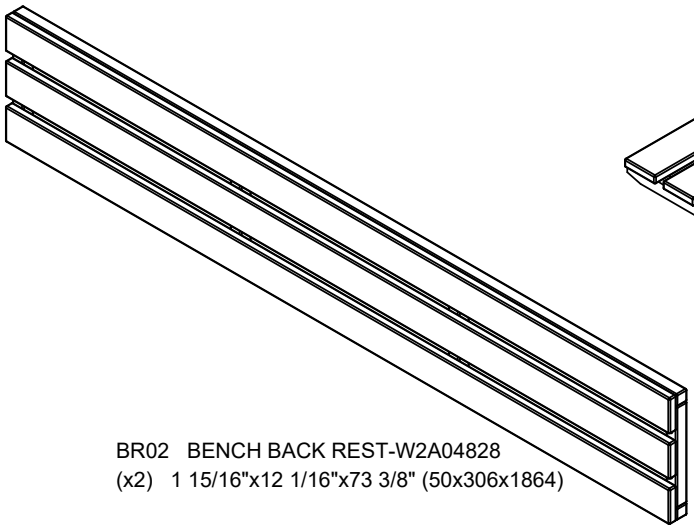

BR02 BENCH BACK REST-W2A04828
(x2) 1 15/16"x12 1/16"x73 3/8" (50x306x1864)

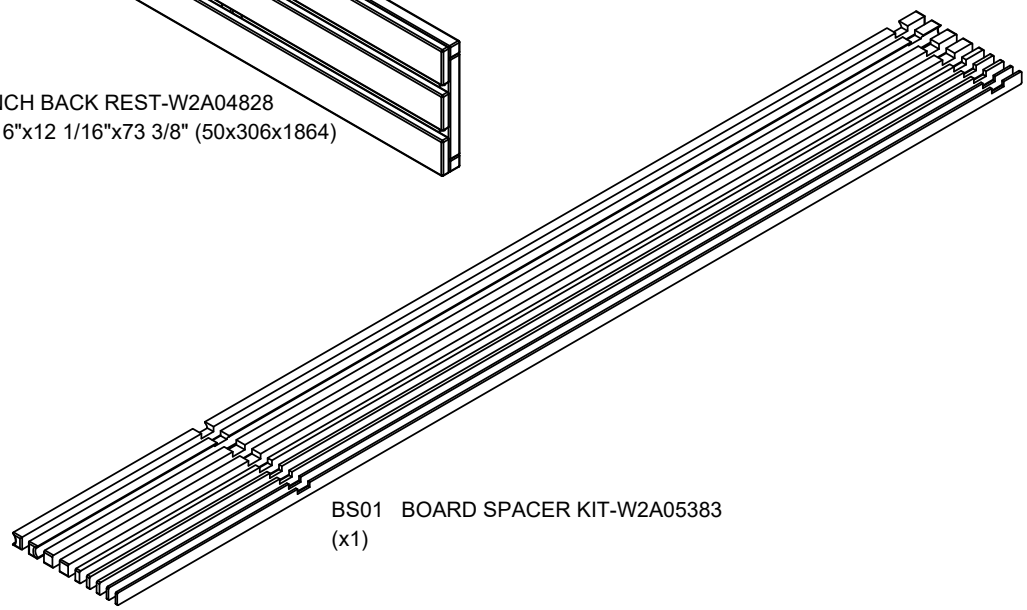

BS01 BOARD SPACER KIT-W2A05383
(x1)

OWNER'S MANUAL - PARTS IDENTIFICATION

WOOD COMPONENTS (NOT TO SCALE)

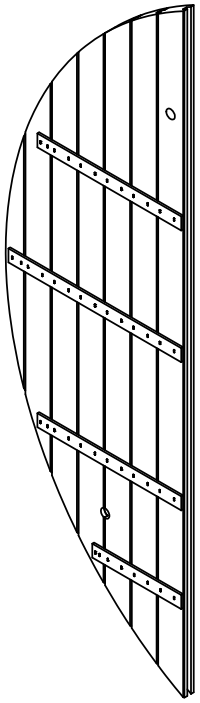

WP01 WALL PANEL ASSEMBLY-W2A04784
(x1) 1 3/8"x19 11/16"x65 3/4" (35x500x1669)

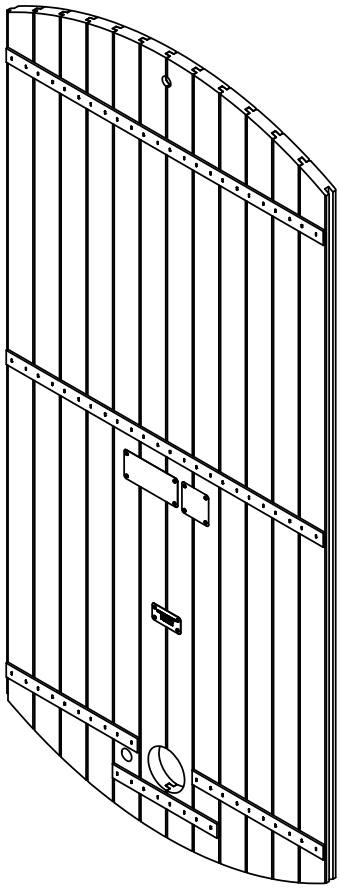

WP02 WALL PANEL ASSEMBLY-W2A05377
(x1) 1 3/8"x35 5/8"x74 9/16" (35x906x1894)

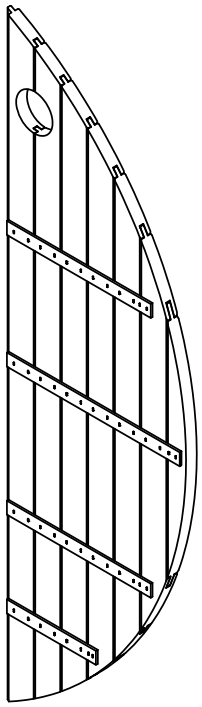

WP03 WALL PANEL ASSEMBLY-W2A05384
(x1) 1 3/8"x20 1/8"x66 1/4" (35x512x1682)

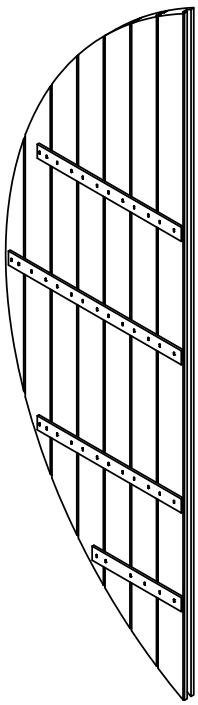

WP05 WALL PANEL ASSEMBLY-W2A05385
(x1) 1 3/8"x19 11/16"x65 3/4" (35x500x1669)

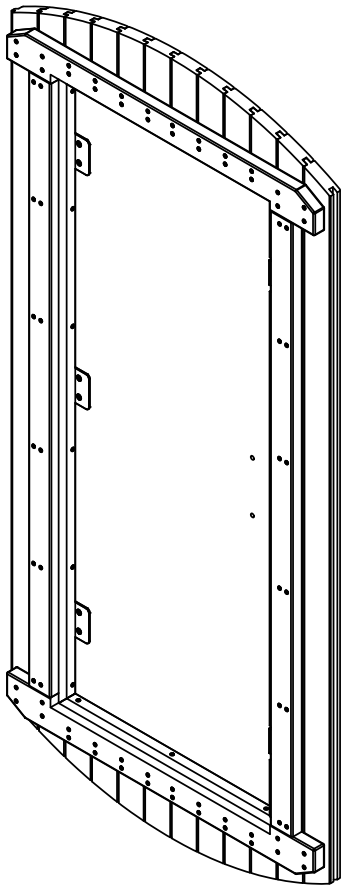

WP04 WALL PANEL ASSEMBLY-W2A04794
(x1) 3 11/16"X35 5/8"X74 9/16" (78x906x1894)

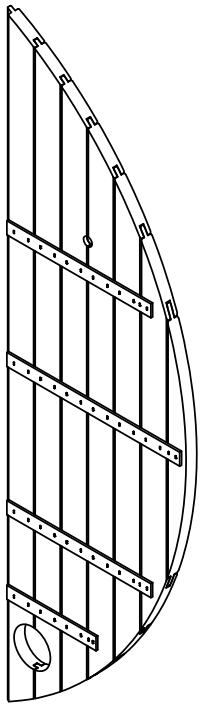

WP06 WALL PANEL ASSEMBLY-W2A05378
(x1) 1 3/8"x20 1/8"x66 1/4" (35x512x1682)

OWNER'S MANUAL - PARTS IDENTIFICATION

WOOD COMPONENTS (NOT TO SCALE)

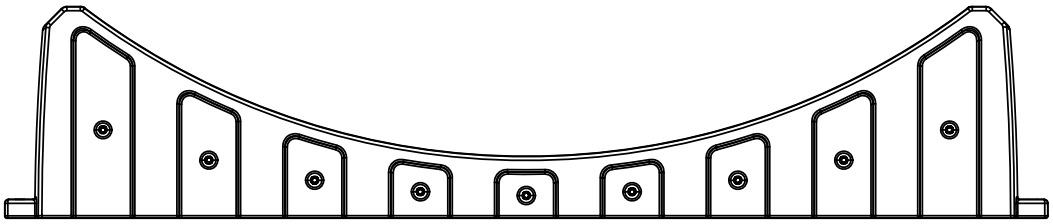

1466 BASE SUPPORT-A6P01466
(x3)

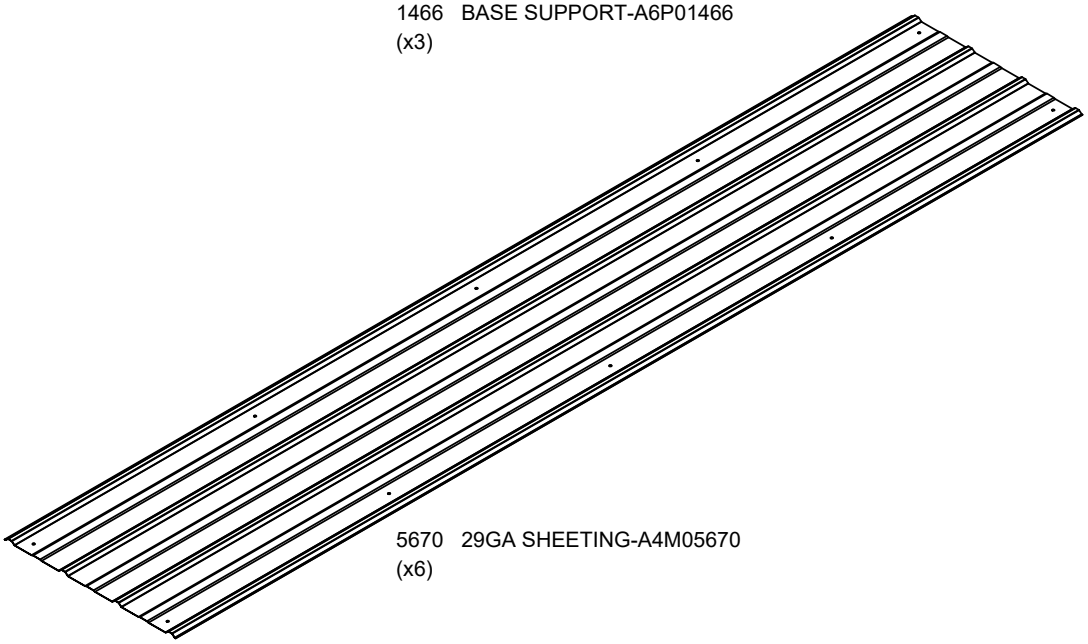

5670 29GA SHEETING-A4M05670
(x6)

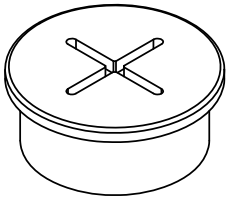

1467 25mm SILICONE GROMMET-A6P01467
(x4)

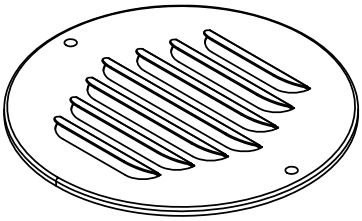

5285 VENT COVER-A4M05285
(x2)

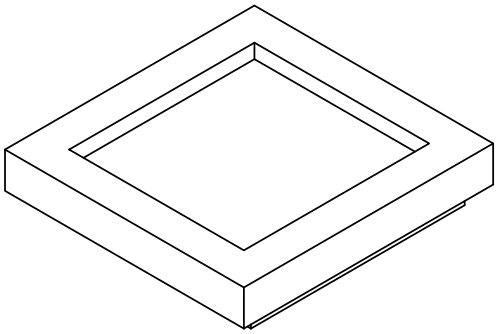

1698 HYGROMETER-A6P01698
(x1)

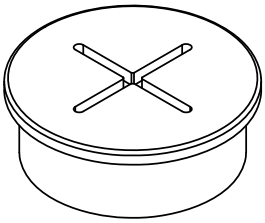

1468 30mm SILICONE GROMMET-A6P01468
(x1)

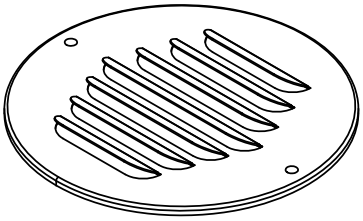

7415 VENT COVER-A4M07415
(x1)

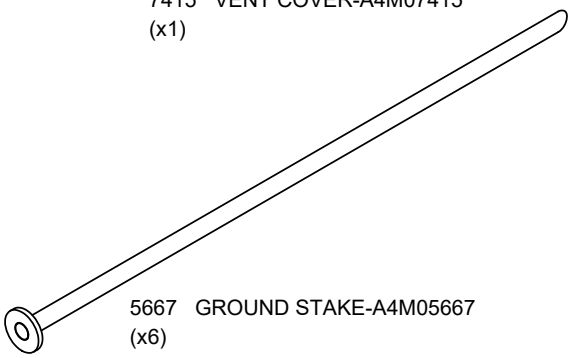

5667 GROUND STAKE-A4M05667
(x6)

OWNER'S MANUAL - PARTS IDENTIFICATION

WOOD COMPONENTS (NOT TO SCALE)

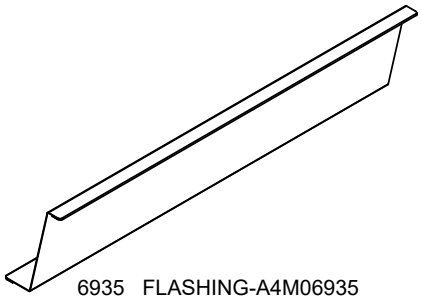

6935 FLASHING-A4M06935
(x1)

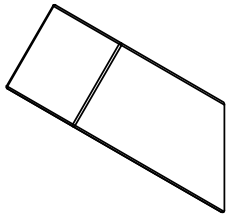

5672 TOWEL HANGER-A4M05672
(x2)

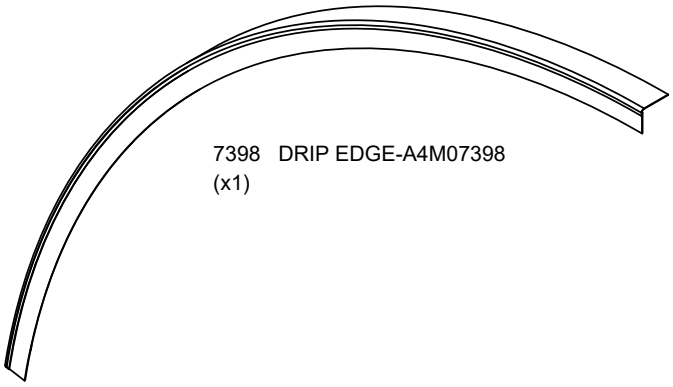

7398 DRIP EDGE-A4M07398
(x1)



7399 DRIP EDGE-A4M07399
(x1)

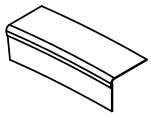

7400 DRIP EDGE SPLICE-A4M07400
(x1)

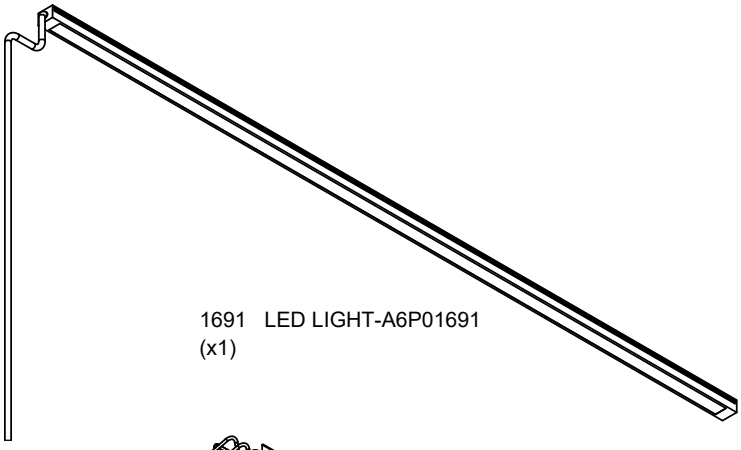

1691 LED LIGHT-A6P01691
(x1)

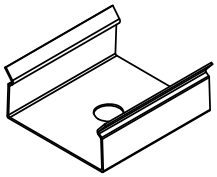

1493-04 LIGHT CLIP-A6P01493-04
(x2)

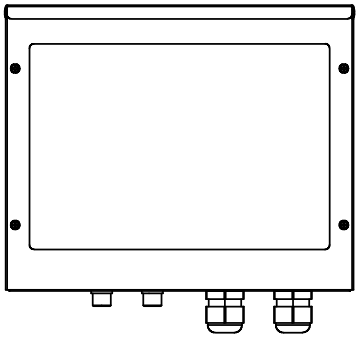

7170 CONTROL BOX-A4M07170
(x1)

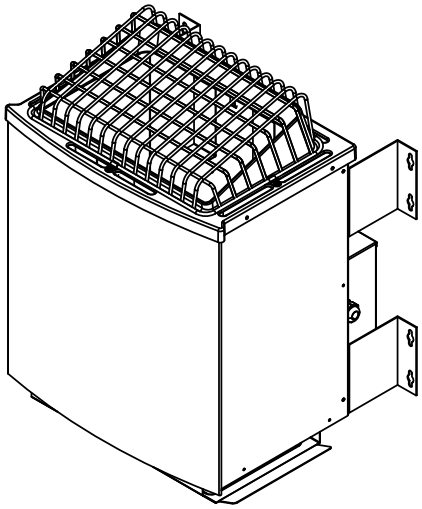

7271 9KW ELECTRIC SAUNA HEATER-A4M07271
(x1)

OWNER'S MANUAL - PARTS IDENTIFICATION

WOOD COMPONENTS (NOT TO SCALE)

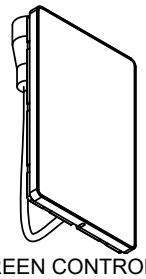

7172 SCREEN CONTROLLER-A4M07172
(x1)

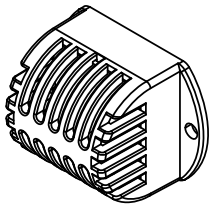

1714 TEMPERATURE SENSOR-A6P01714
(x1)

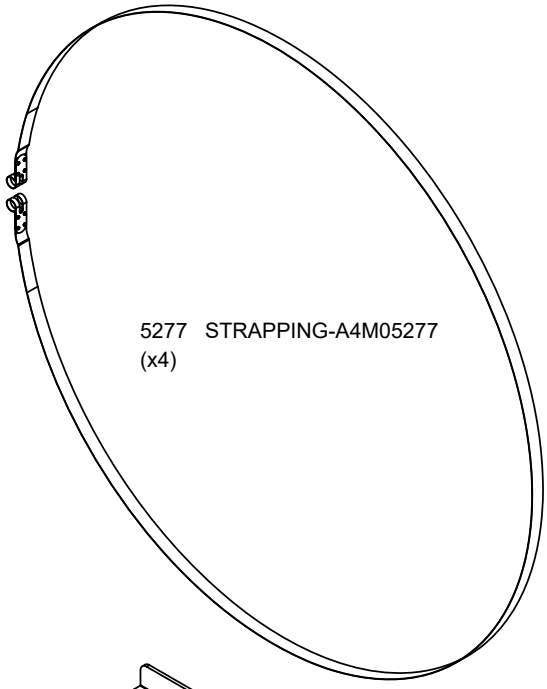

5277 STRAPPING-A4M05277
(x4)

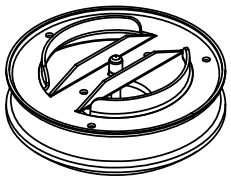

5592 VENT ASSEMBLY-A4M05592
(x1)

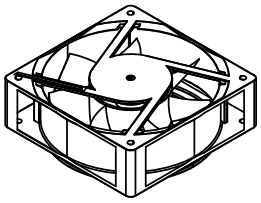

7272 SAUNA FAN-A4M07272
(x1)

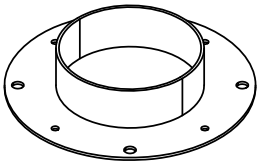

7417 SAUNA FAN BRACKET-A4M07417
(x1)

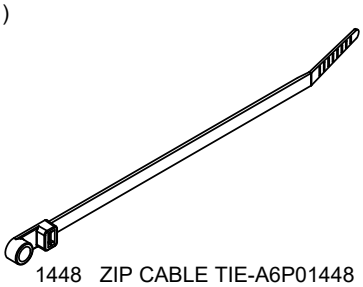

1448 ZIP CABLE TIE-A6P01448
(x10)

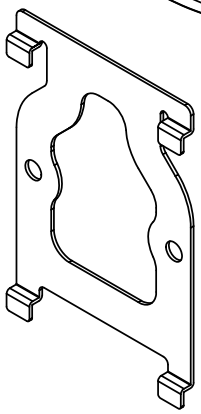

A4M05590-03 CONTROL PANEL MOUNTING BRACKET-A4M05590-03
(x1)

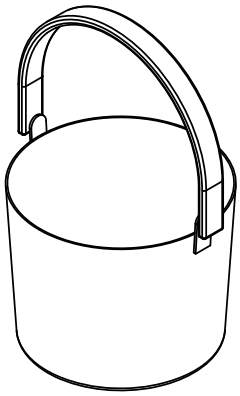

B01 BUCKET-A4M05673
(x1)

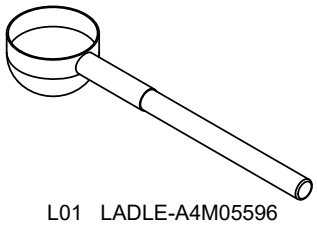

L01 LADLE-A4M05596
(x1)

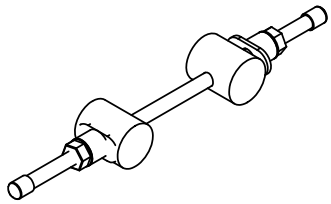

5671 STRAPPING CINCH-A4M05671
(x4)

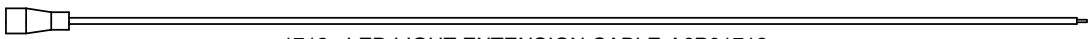

1712 LED LIGHT EXTENSION CABLE-A6P01712
(x1)



5590-10 WIRING HARNESS-A4M05590-10
(x1)



1732 SAUNA POWER WIRE-A6P01732
(x1)

OWNER'S MANUAL - PARTS IDENTIFICATION

WOOD COMPONENTS (NOT TO SCALE)

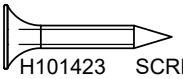

H101423 SCREW TFH 8X7/8 SS-BLK
(x5) 8x7/8

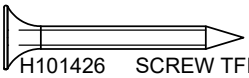

H101426 SCREW TFH 8X1 1/4 SS-BLK
(x3) 8x1-1/4

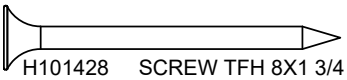

H101428 SCREW TFH 8X1 3/4 SS-BLK
(x150) 8x1-3/4

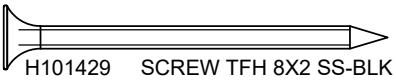

H101429 SCREW TFH 8X2 SS-BLK
(x221) 8x2



H101430 SCREW TFH 8X2 1/4 SS-BLK
(x28) 8x2-1/4

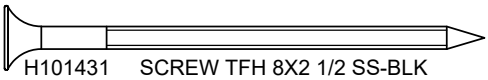

H101431 SCREW TFH 8X2 1/2 SS-BLK
(x20) 8x2-1/2

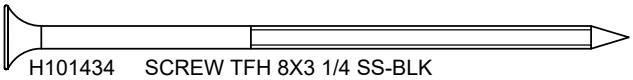

H101434 SCREW TFH 8X3 1/4 SS-BLK
(x14) 8x3 1/4

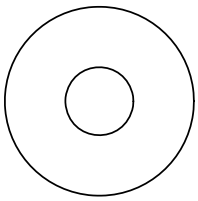

H101403 POLY WASHER
(x4)

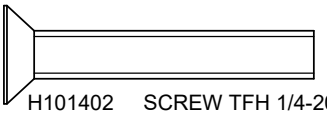

H101402 SCREW TFH 1/4-20 X 1 5/8 SS
(x2) 1/4-20 X 1 5/8

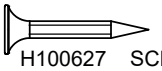

H100627 SCREW PFH BLK
(x2) 6x3/4

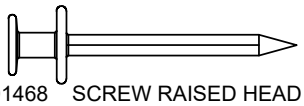

H101468 SCREW RAISED HEAD 8X1 BLK
(x8)

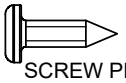

H101409 SCREW PPH 4x1/2 BLK
(x10) 4x1/2

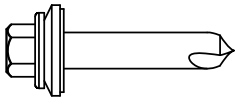

H101480 SCREW SELF TAPPING #9x1 BLK
(x63) 1/4 x 1

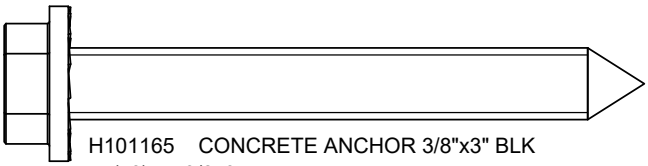

H101165 CONCRETE ANCHOR 3/8"x3" BLK
(x6) 3/8x3

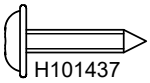

H101437 SCREW TWH 8x5/8 SS-BLK
(x2) 8x5/8

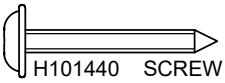

H101440 SCREW TWH 8x1 SS-BLK
(x5) 8x1

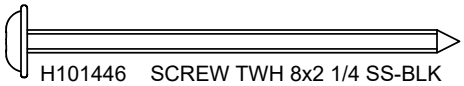

H101446 SCREW TWH 8x2 1/4 SS-BLK
(x4) 8x21/4

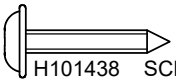

H101438 SCREW TWH 8x3/4 SS-BLK
(x10) 8x3/4

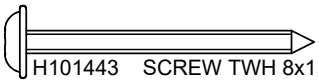

H101443 SCREW TWH 8x1 1/2 SS-BLK
(x12) 8x1-1/2

H101100 MAGNETIC DRIVER
(x1)

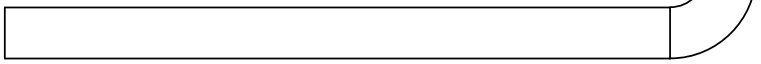

H100114 TORX WRENCH
(x1)

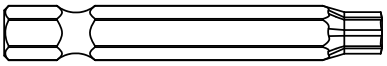

H100147 TORX BIT
(x1) T-30

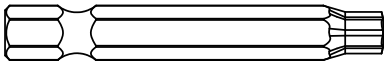

H100879 TORX BIT
(x1) T-20

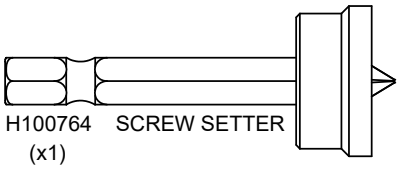

H100764 SCREW SETTER
(x1)

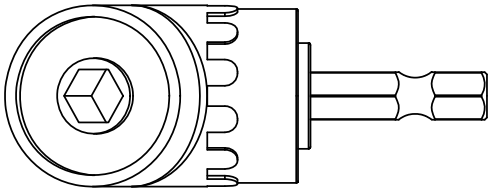

H101114 RIGHT ANGLE DRILL ADAPTER
(x1)

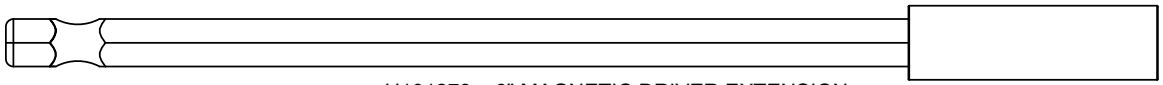

H101278 6" MAGNETIC DRIVER EXTENSION
(x1)

PRE-ASSEMBLY STEP 1 - SORTING PARTS

It is critical for ease of assembly that you take the time to sort and organize the wood and hardware.

WOOD PARTS:

- Organize wood parts by the three-digit, alpha-numeric number stamped on each board (ex. P01).
- If there are multiple boards with the same stamped number, stack those pieces together.
- Stamps can be found on the flat surface of the boards or on the end of the boards.
- Allow yourself plenty of room - the wood pieces can take up a significant amount of space.

NOTE: CARTONS ARE NOT ORGANIZED BY BOARD NUMBER.



HARDWARE PARTS:

- We recommend that you have a separate table to organize the hardware.
- Hardware bags are printed with a seven-digit, alpha-numeric part number.
- You can organize your hardware by part number or group by hardware type (i.e. bolts, nuts, etc.).
- During assembly you only need to reference the last four digits of the number.



PRE-ASSEMBLY STEP 2 - TOOLS REQUIRED



Cordless Drill or
Electric Drill



Drill Attachments:
Phillips Head



1/8", 3/16", 3/8" &
7/16" Drill Bits



Phillips Screw Driver



Open End
Wrench 11/16"



3/8" Drive Ratchet, 1/2" &
7/16" STD Sockets, 1/2" &
7/16" Deep Sockets



Tape Measure



Claw Hammer

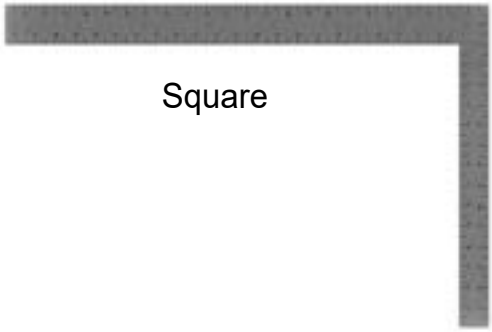

Square



Level 24"



Rubber Mallet -
Optional



Rope 25ft [7.62m] long - Optional

PRE-ASSEMBLY STEP 3 - CHOOSE YOUR ASSEMBLY METHOD

There are several types of assembly instructions available to you.

1. Printed Assembly Manual included with your set
2. BILT APP - 3D interactive instructions
3. Combination of the Printed Manual and BILT APP (Note: Step numbers can differ between the two methods)



STEP 1 - BASE ASSEMBLY

QTY	PART NUMBER	DESCRIPTION
3	H101429	SCREW TFH 8X2 SS-BLK

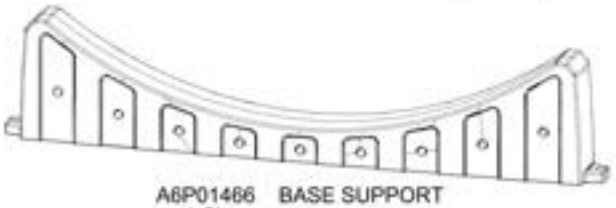

A6P01466 BASE SUPPORT
(x3)



OB01 PERIMETER BOARD - W4L23466
(x1) 1 3/16"x3"x99 15/16" (30x76x2538)

- STAND BASE SUPPORTS UP AND HOLD DIMENSIONS SHOWN.
- ATTACH HARDWARE AS SHOWN.

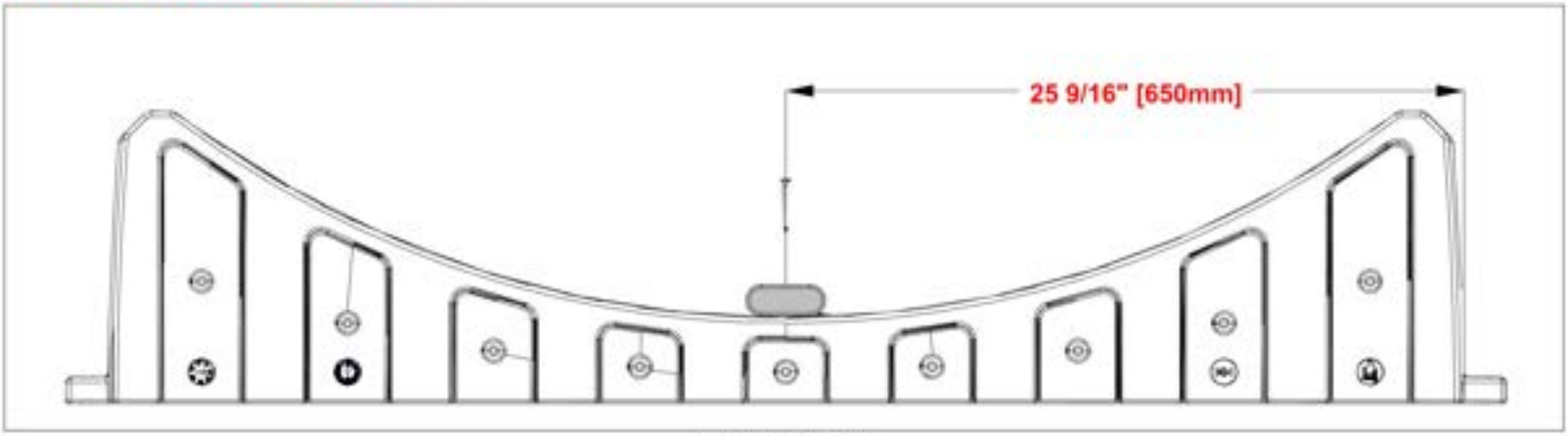

FRONT VIEW

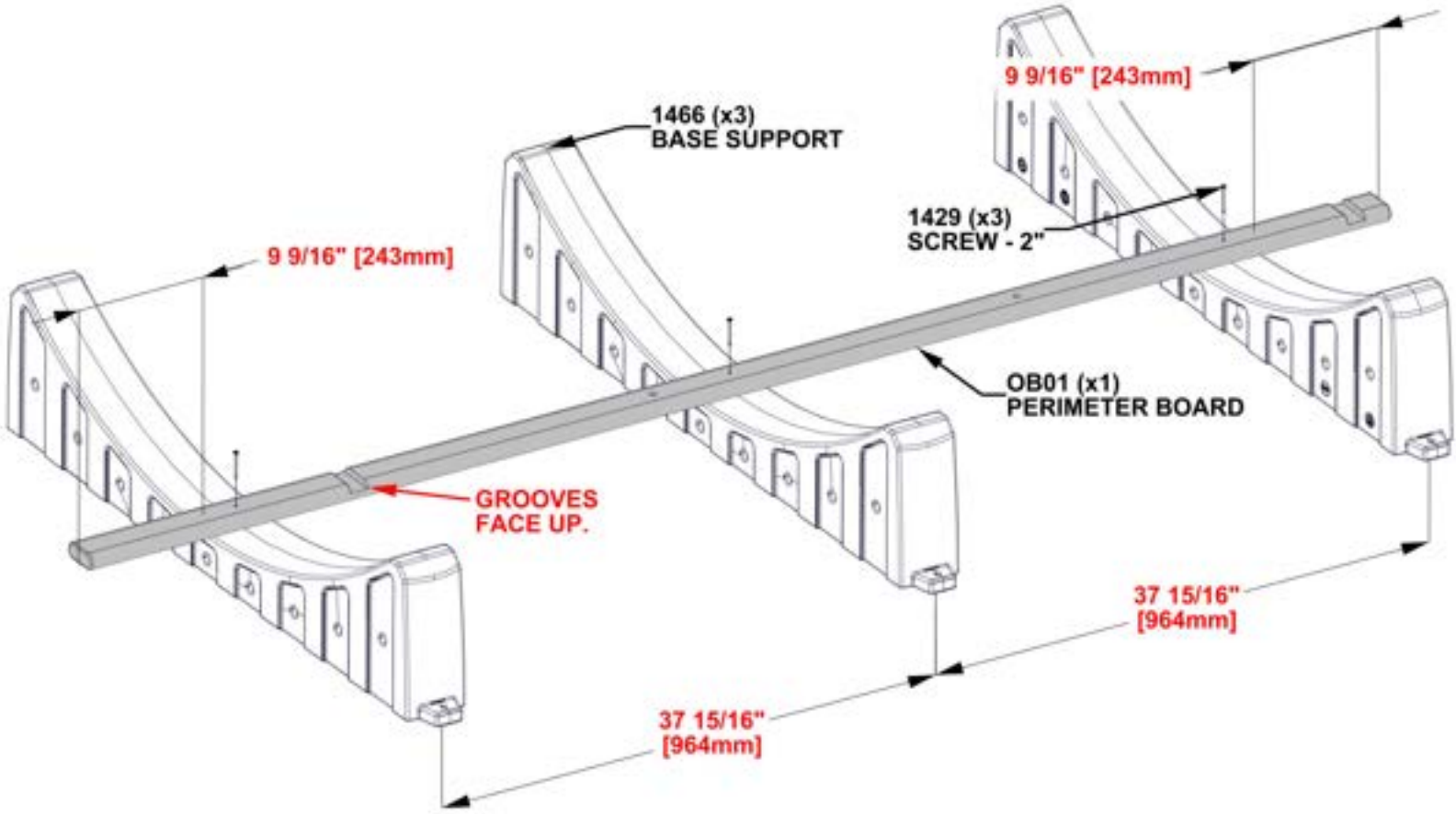

STEP 2 - ANCHORING TO GROUND



A4M05667 GROUND STAKE
(x6)

- IF SAUNA IS TO SIT ON A CONCRETE SURFACE, SEE STEP 3.
- BEFORE ANCHORING, ENSURE THERE IS A SLIGHT DOWNWARD SLOPE FROM THE FRONT TO THE BACK OF THE SAUNA.
- THE FRONT OF THE SAUNA SHOULD BE APPROXIMATELY 1" HIGHER THAN THE BACK.
- THIS WILL ENSURE THAT WATER WILL RUN OFF THE BACK.
- ADDING SHIMS UNDER THE FRONT SAUNA BASE MAY BE NECESSARY TO ACHIEVE THIS SLOPE.

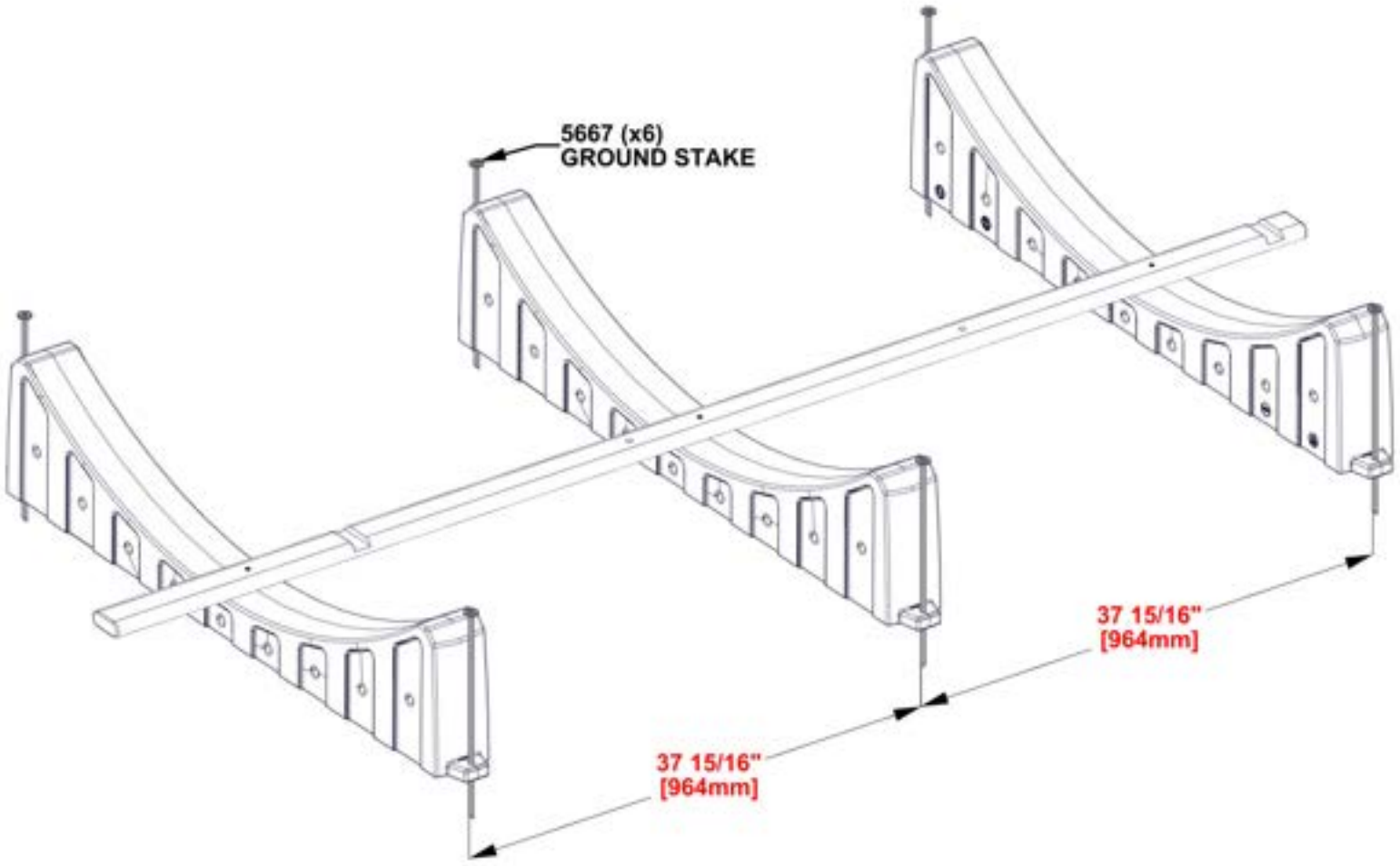

STEP 3 - ANCHORING TO CONCRETE

QTY	PART NUMBER	DESCRIPTION
6	H101165	CONCRETE ANCHOR 3/8x3" BLK

- IF SAUNA IS TO SIT ON THE GROUND, SEE STEP 2.
- BEFORE ANCHORING, ENSURE THERE IS A SLIGHT DOWNWARD SLOPE FROM THE FRONT TO THE BACK OF THE SAUNA.
- THE FRONT OF THE SAUNA SHOULD BE APPROXIMATELY 1" HIGHER THAN THE BACK.
- THIS WILL ENSURE THAT WATER WILL RUN OFF THE BACK.
- ADDING SHIMS UNDER THE FRONT SAUNA BASE MAY BE NECESSARY TO ACHIEVE THIS SLOPE.

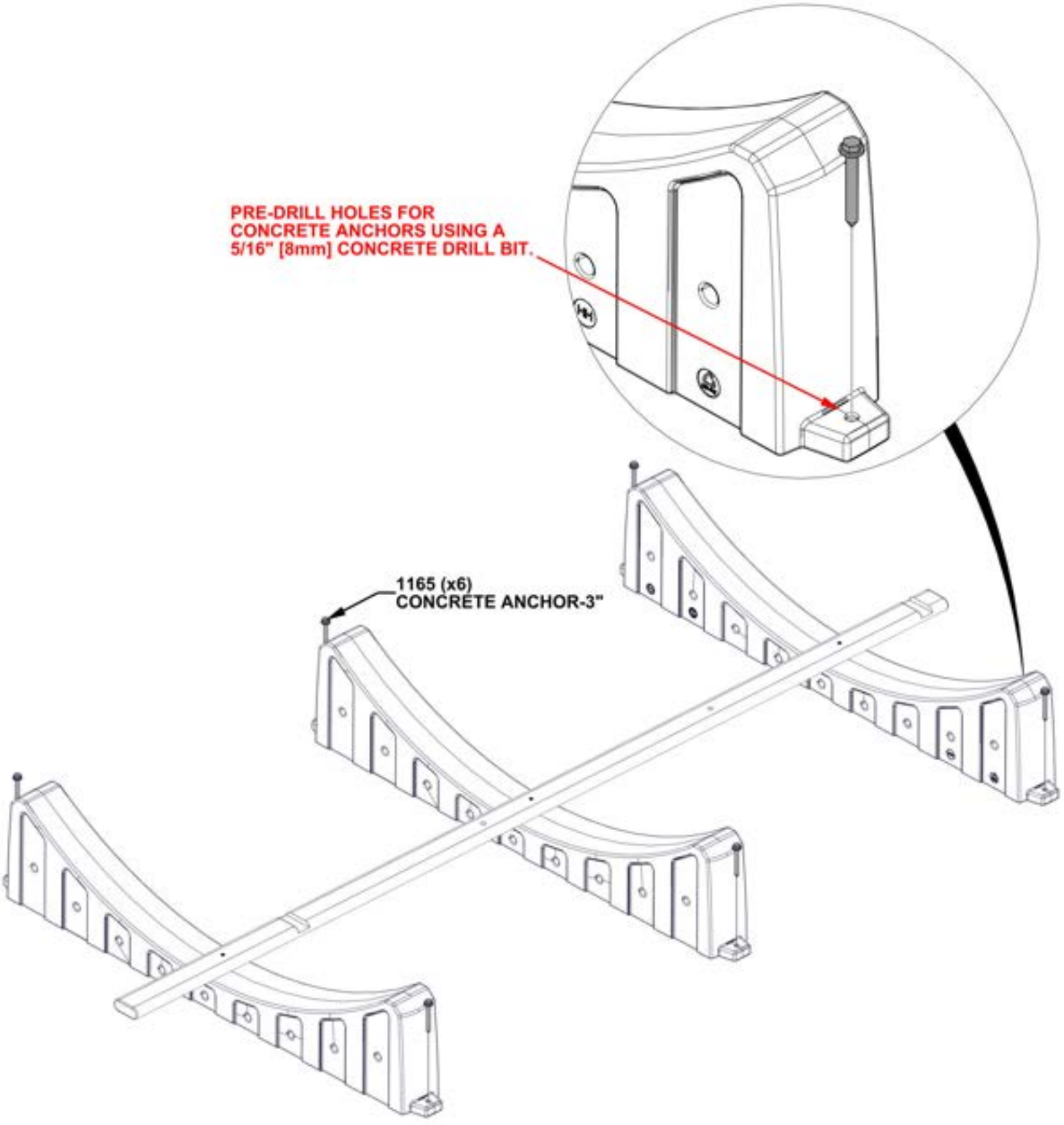

STEP 4 - BASE ASSEMBLY

QTY	PART NUMBER	DESCRIPTION
42	H101429	SCREW TFH 8X2 SS-BLK



OG02 (x7) PERIMETER BOARD - W4L23467
1 3/16"x3 3/8"x99 15/16" (30x86x2538)

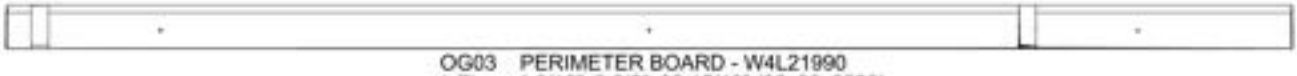

OG03 (x7) PERIMETER BOARD - W4L21990
1 3/16"x3 3/8"x99 15/16" (30x86x2538)

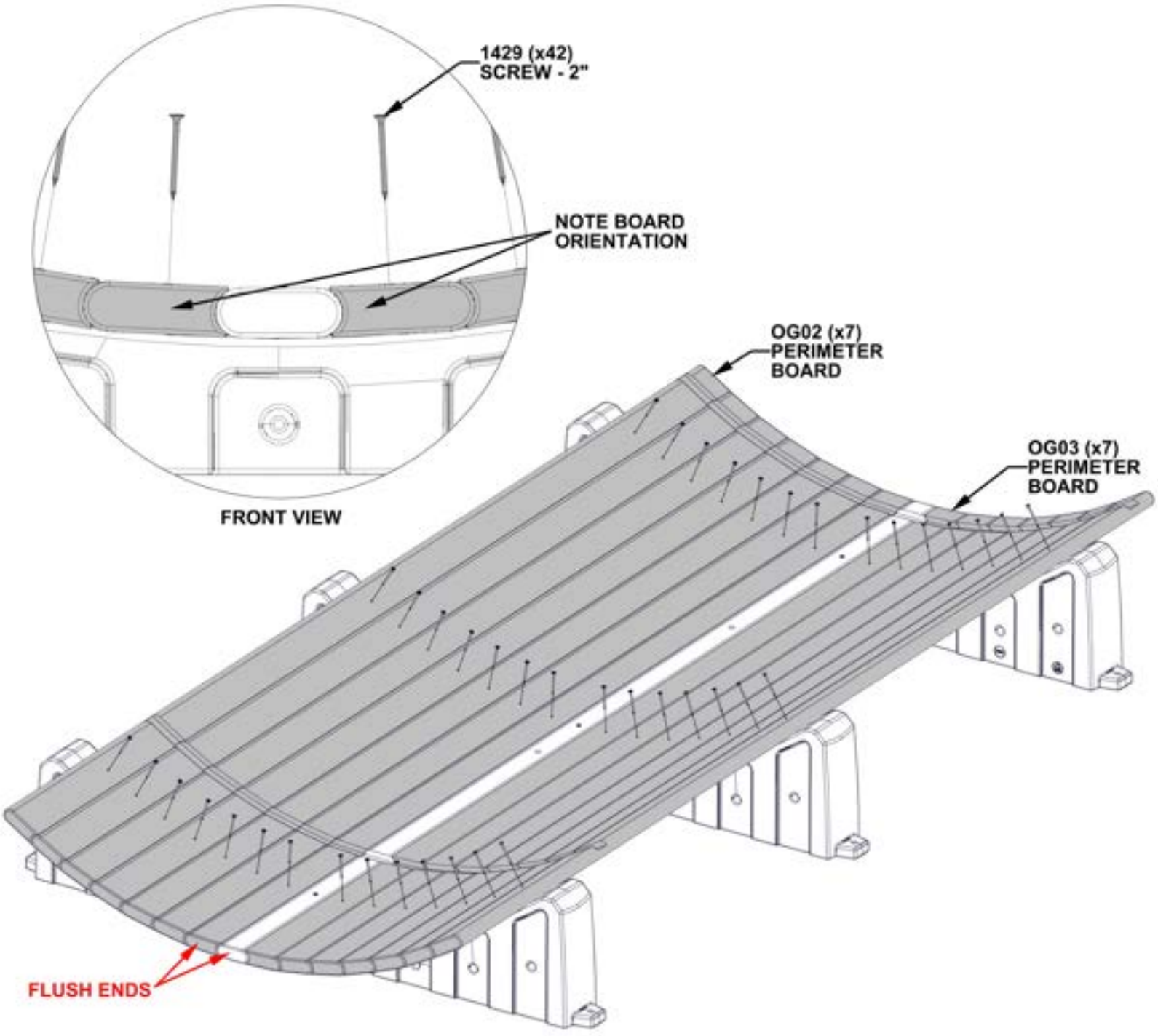

STEP 5 - BACK WALL ASSEMBLY

QTY	PART NUMBER	DESCRIPTION
32	H101429	SCREW TFH 8X2 SS-BLK

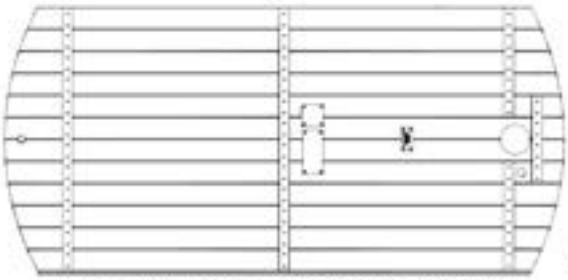

WP02 (x1) WALL PANEL ASSEMBLY - W2A05377
1 3/8"x35 5/8"x74 9/16" (35x906x1894)

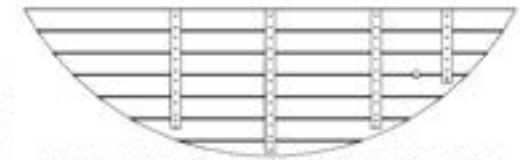

WP01 (x1) WALL PANEL ASSEMBLY - W2A04784
1 3/8"x19 11/16"x85 3/4" (35x500x1669)



OG08 (x1) WALL CLEAT - W4L21868
1 3/16"x3 3/8"x61 7/16" (30x86x1560)



WP03 (x1) WALL PANEL ASSEMBLY - W2A05384
1 3/8"x20 1/8"x66 1/4" (35x512x1682)

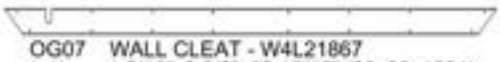

OG07 (x1) WALL CLEAT - W4L21867
1 3/16"x3 3/8"x63 15/16" (30x86x1624)

- USING DIMENSION SHOWN, CENTER AND ATTACH WALL CLEATS.
- THE FINISHED WALL PANEL ASSEMBLY SHOULD MEASURE 74 9/16" [1894mm] IN DIAMETER.

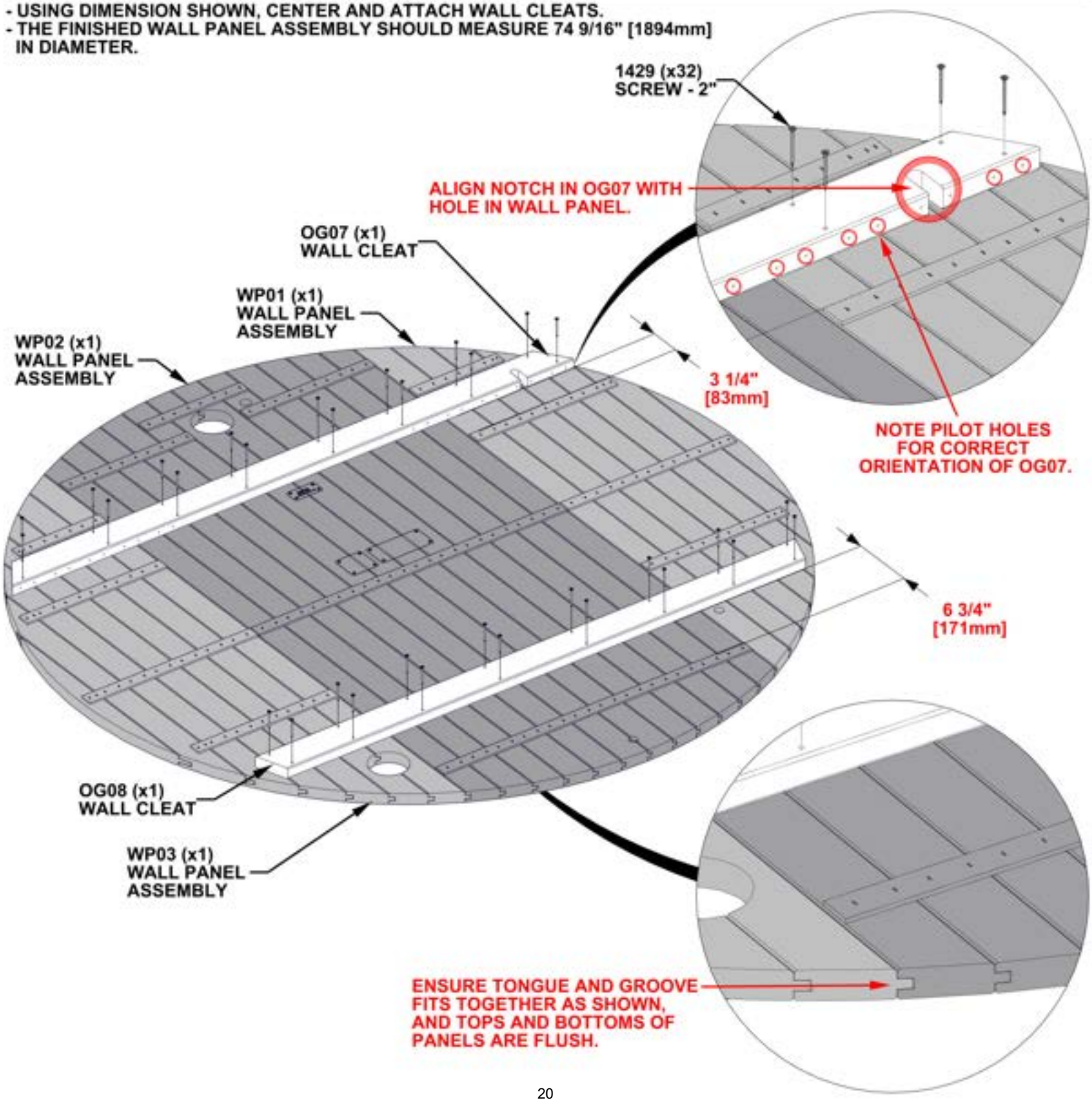

STEP 6 - BACK WALL ASSEMBLY

QTY	PART NUMBER	DESCRIPTION
16	H101429	SCREW TFH 8X2 SS-BLK



OV01 (x2) HEATER GUARD SPACER - W4L21887
1 3/16"x4 7/16"x23 15/16" (30x112x608)

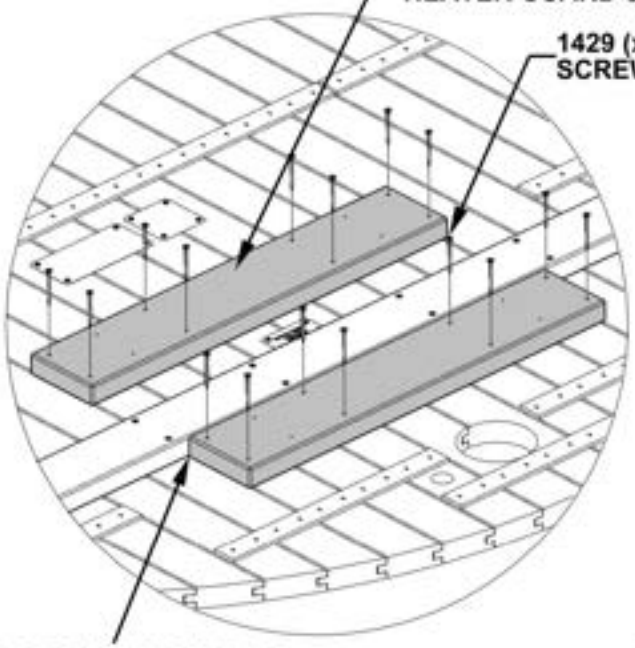

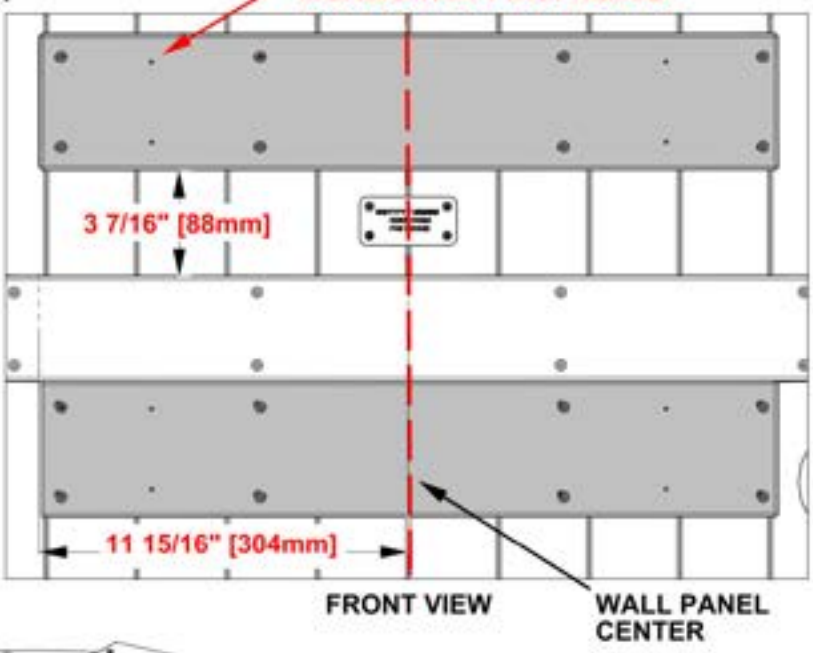

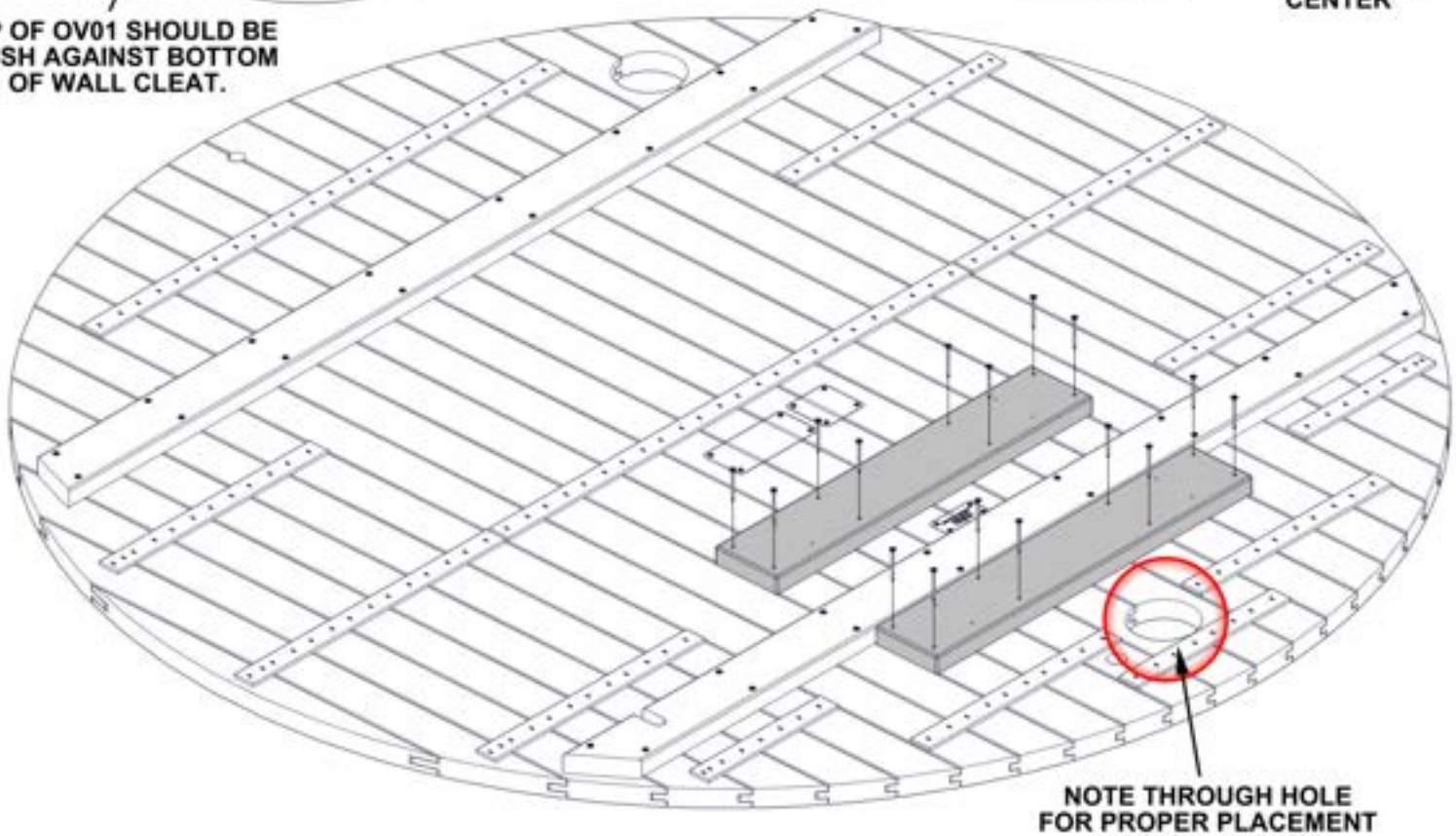

STEP 7 - BACK WALL ASSEMBLY

QTY	PART NUMBER	DESCRIPTION
8	H101429	SCREW TFH 8X2 SS-BLK



OR01 (x2) GUARD MOUNTING BOARD - W4L21873
1 3/16"x2 3/8"x23 15/16" (30x60x608)

- FLUSH ENDS OF OR01 MOUNTING BOARDS WITH ENDS OF HEATER GUARD SPACER BOARDS.
- HOLD TOP OR01 TO SHOWN DIMENSION.

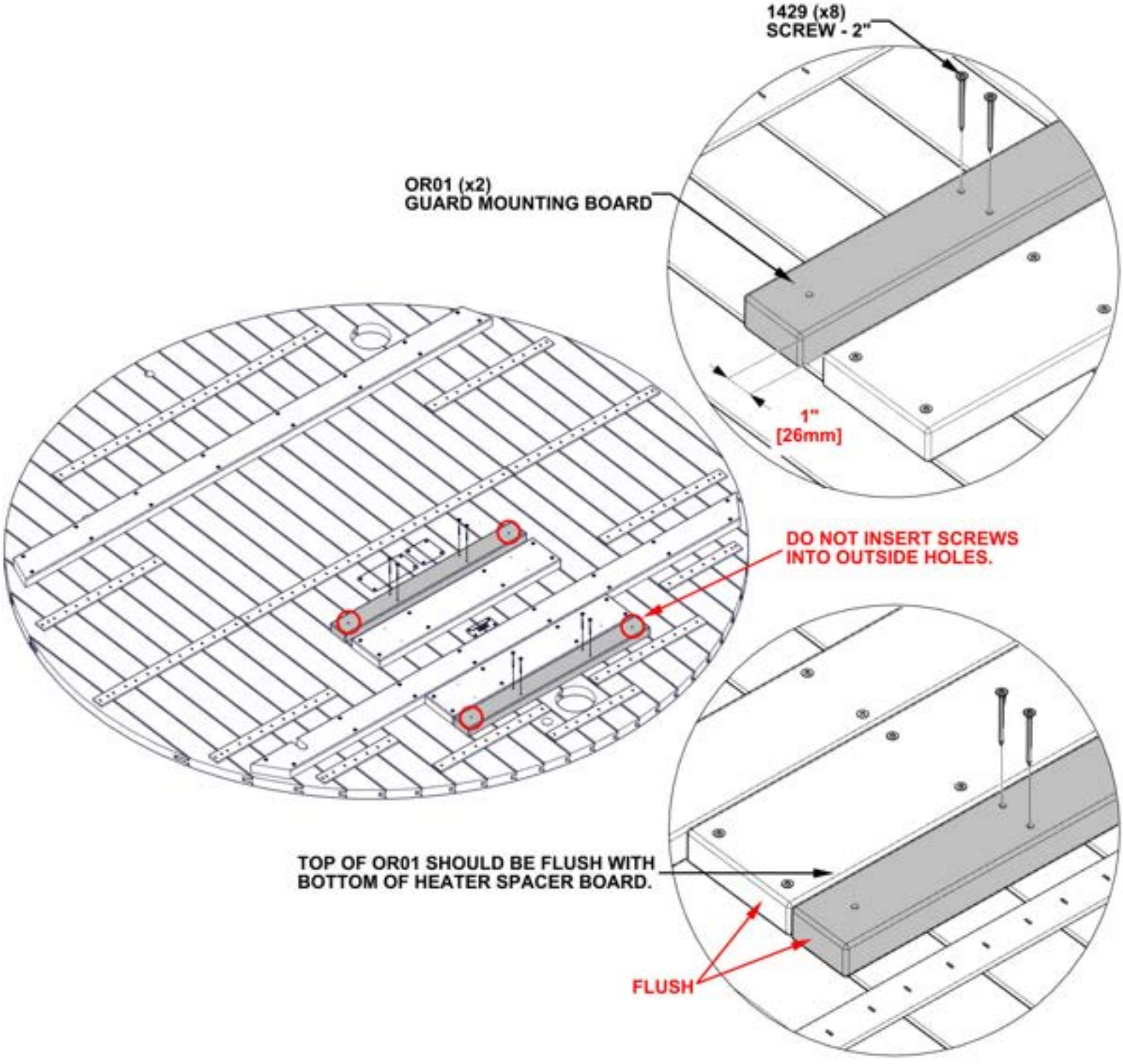

STEP 8 - FRONT WALL ASSEMBLY

QTY	PART NUMBER	DESCRIPTION
24	H101429	SCREW TFH 8X2 SS-BLK



WP04 (x1) WALL PANEL ASSEMBLY - W2A04794
3 11/16"X35 5/8"X74 9/16" (78x906x1894)

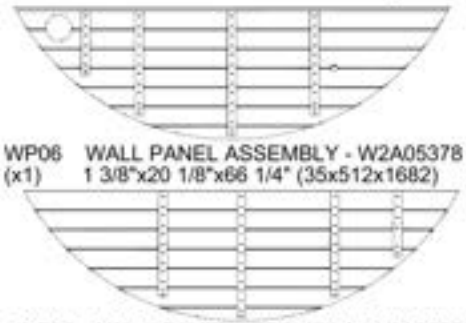

WP06 (x1) WALL PANEL ASSEMBLY - W2A05378
1 3/8"x20 1/8"x66 1/4" (35x512x1682)

WP05 (x1) WALL PANEL ASSEMBLY - W2A05385
1 3/8"x19 11/16"x65 3/4" (35x500x1669)



OG05 (x2) WALL CLEAT - W4L21862
1 3/16"x3 3/8"x16 7/8" (30x86x429)

OG06 (x1) WALL CLEAT - W4L21863
1 3/16"x3 3/8"x17 3/16" (30x86x437)

OG13 (x1) WALL CLEAT - W4L22019
1 3/16"x3 3/8"x17 3/16" (30x86x437)

- USING DIMENSION SHOWN CENTER AND ATTACH WALL CLEATS.
- THE FINISHED WALL PANEL ASSEMBLY SHOULD MEASURE 74 9/16" [1894mm] IN DIAMETER.
- CAUTION: SUPPORT GLASS DOOR AT ALL TIMES TO PREVENT ACCIDENTAL OPENING AND BREAKAGE.

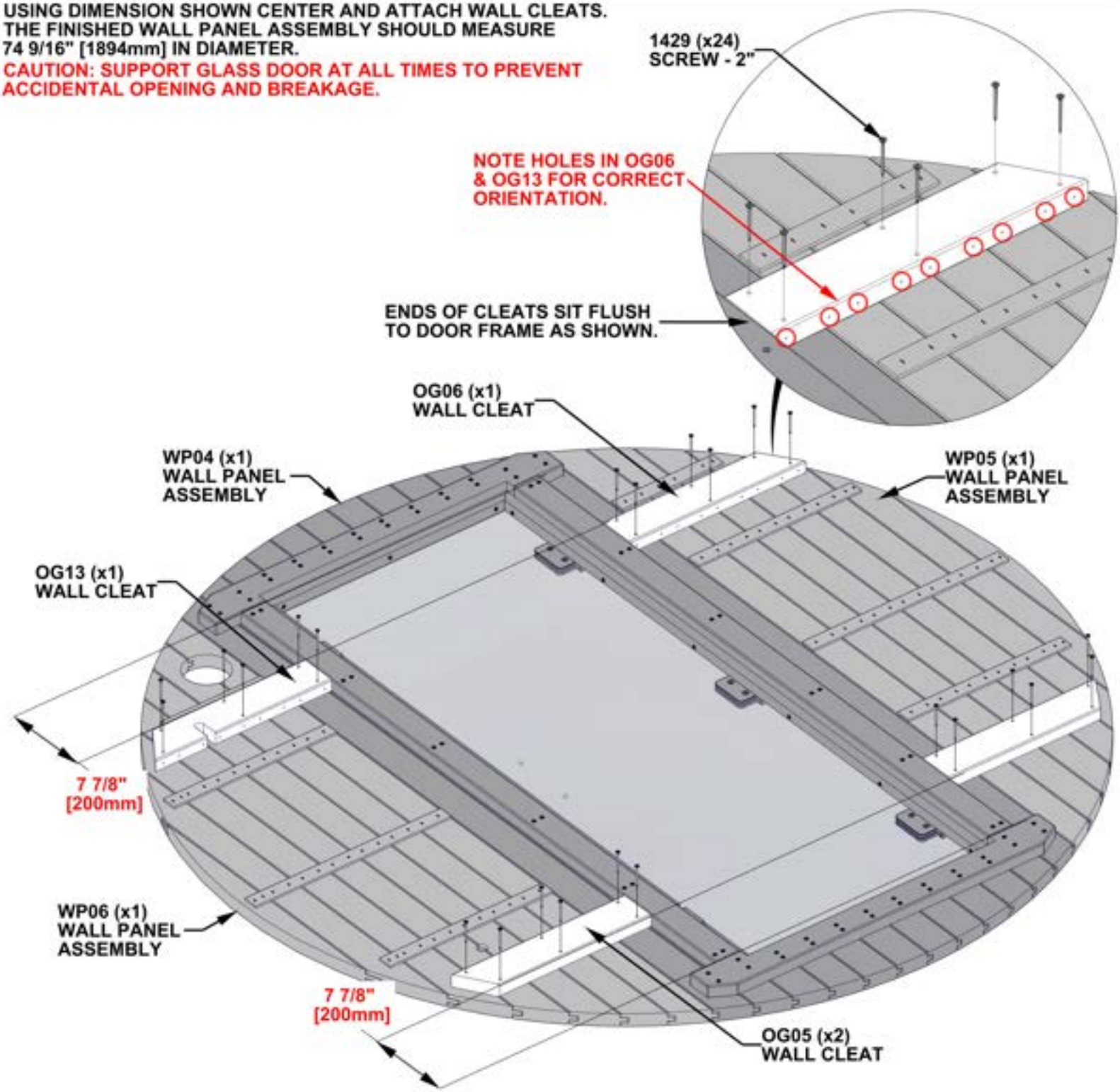

STEP 9 - SAUNA ASSEMBLY

- CAREFULLY LOWER BACK WALL ASSEMBLY INTO THE GROOVES ON THE PERIMETER BOARD/BASE SUPPORT ASSEMBLED IN STEP 4.
- HAVE A SECOND PERSON HOLD THE BACK WALL TO KEEP IT STEADY DURING THE NEXT FEW STEPS.
- WHEN LIFTING THE WALL ASSEMBLY, LIFT BY THE TOP AND BOTTOM NOT THE SIDES.

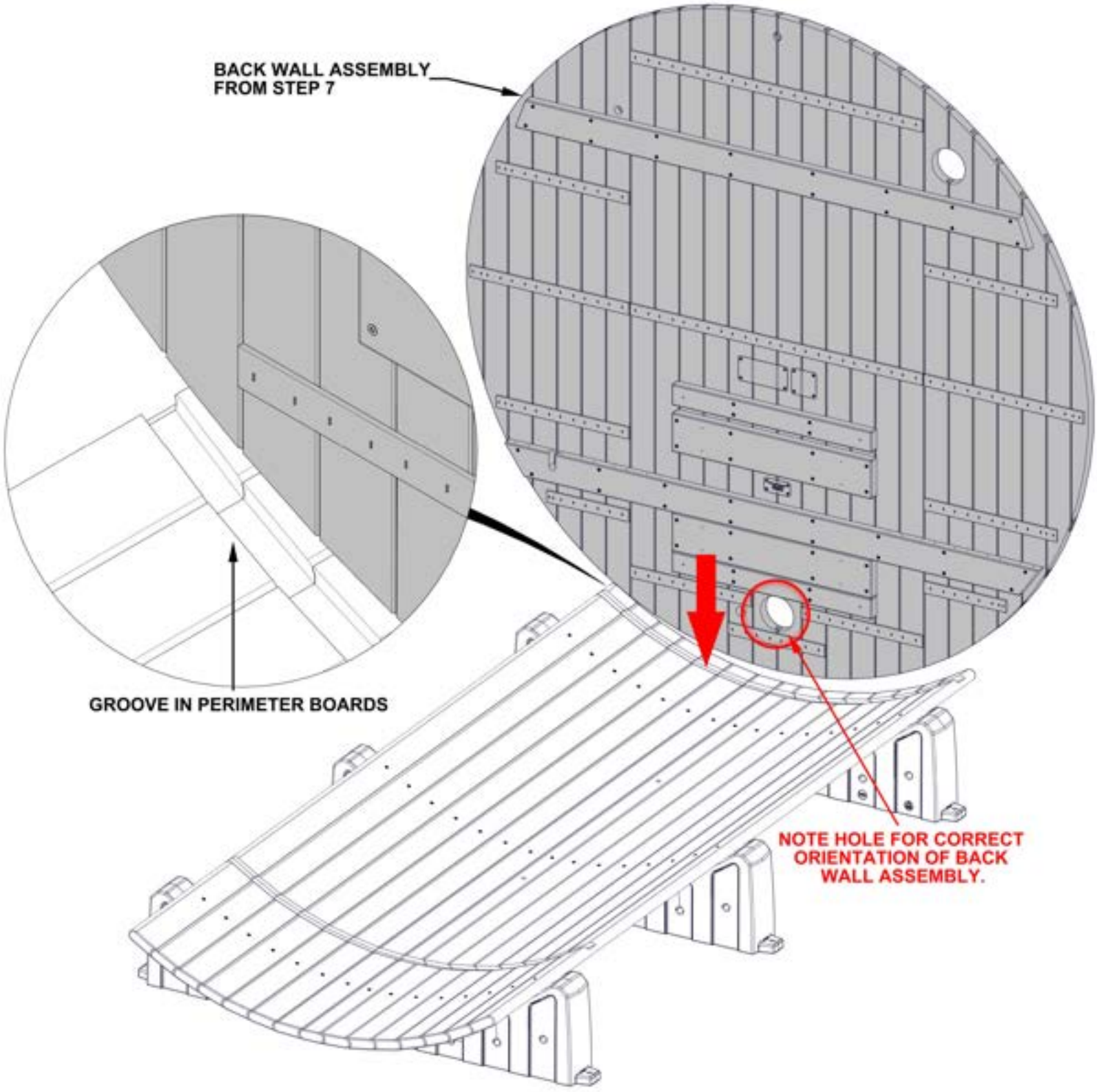

STEP 10 - SAUNA ASSEMBLY



OG01 (x1) PERIMETER BOARD - W4L21988
1 3/16"x3 3/8"x99 15/16" (30x86x2538)

- CAREFULLY LOWER FRONT WALL ASSEMBLY INTO THE GROOVES ON THE PERIMETER BOARD/BASE SUPPORT ASSEMBLED IN STEP 4.
- POSITION THE PERIMETER BOARD ON THE TOP OF THE WALL ASSEMBLIES TO HOLD THE WALLS IN PLACE.
- WHEN LIFTING WALL ASSEMBLY, LIFT BY TOP AND BOTTOM NOT THE SIDES.
- CAUTION: SUPPORT GLASS DOOR AT ALL TIMES TO PREVENT ACCIDENTAL OPENING AND BREAKAGE.

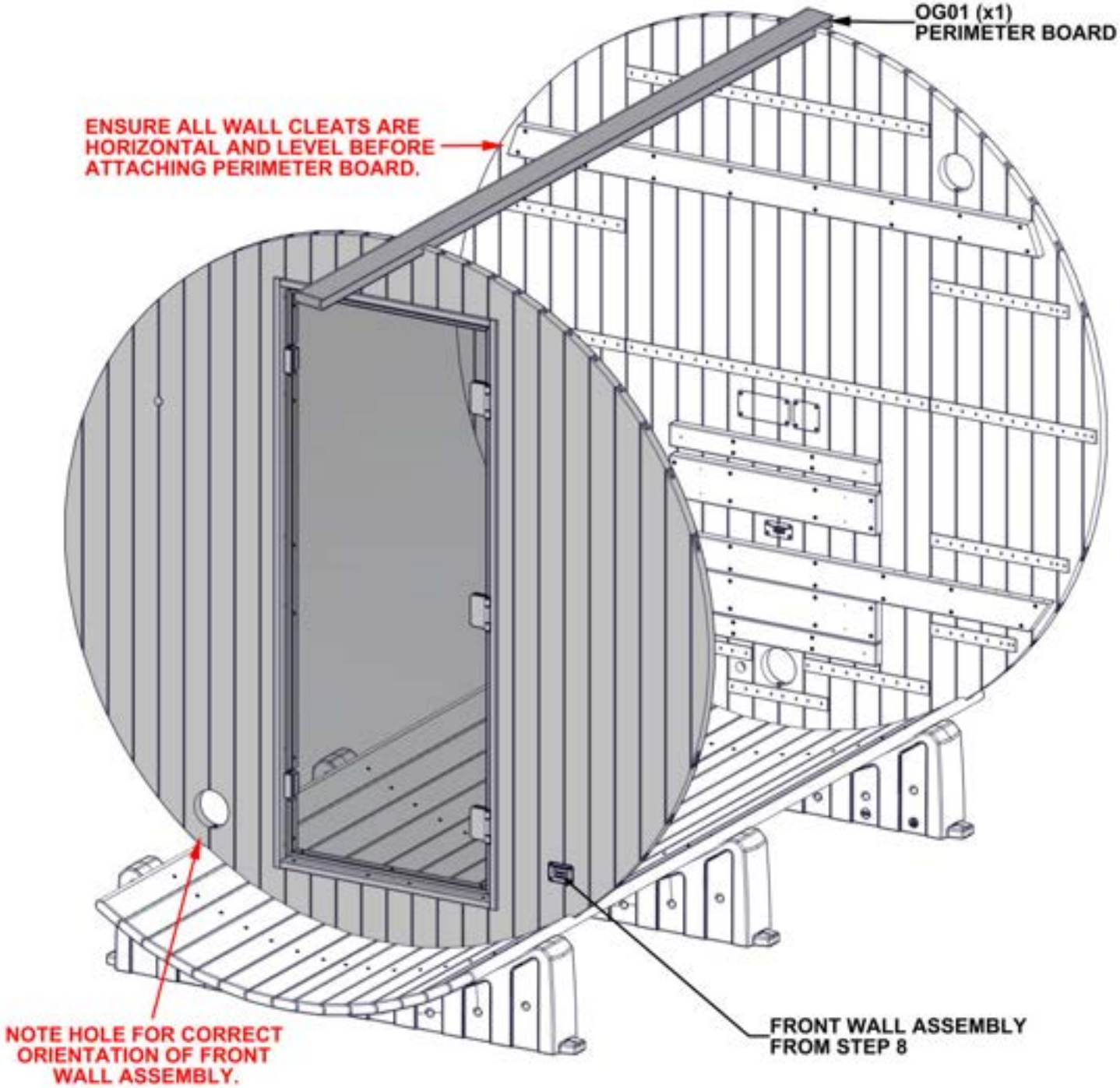

STEP 11 - SAUNA ASSEMBLY

QTY	PART NUMBER	DESCRIPTION
14	H101428	SCREW TFH 8X1 3/4 SS-BLK

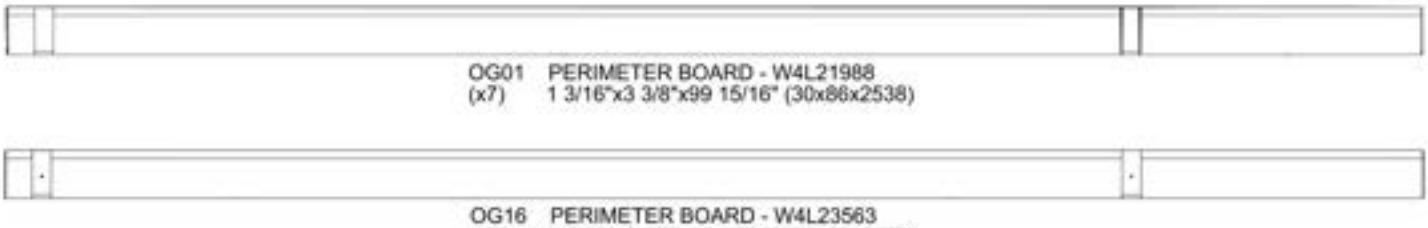

OG01 PERIMETER BOARD - W4L21988
(x7) 1 3/16"x3 3/8"x99 15/16" (30x86x2538)

OG16 PERIMETER BOARD - W4L23563
(x7) 1 3/16"x3 3/8"x99 15/16" (30x86x2538)

- ALIGN GROOVE IN PERIMETER BOARDS WITH BOTH FRONT WALL AND BACK WALL ASSEMBLIES.
- STARTING WITH AN OG01 BOARD, WORK UPWARDS STACKING BOARDS IN THE ORDER SHOWN.
- ATTACH EACH OG16 WITH SCREWS BEFORE THE NEXT BOARD IS INSTALLED.

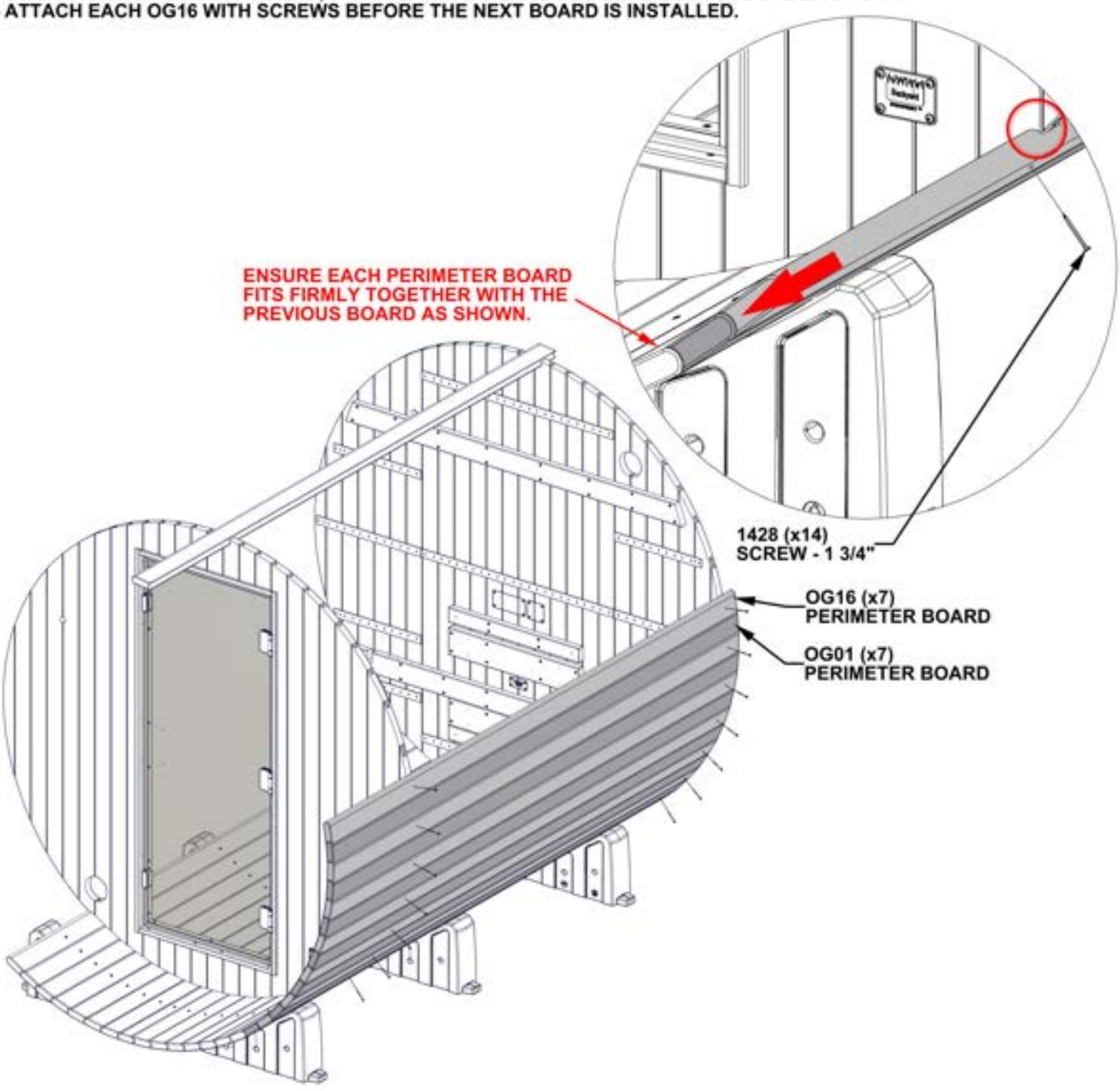

STEP 12 - SAUNA ASSEMBLY

QTY	PART NUMBER	DESCRIPTION
14	H101428	SCREW TFH 8X1 3/4 SS-BLK



OG15 PERIMETER BOARD - W4L23468
(x7) 1 3/16"x3 3/8"x99 15/16" (30x86x2538)



OG17 PERIMETER BOARD - W4L23564
(x7) 1 3/16"x3 3/8"x99 15/16" (30x86x2538)

- ALIGN GROOVE IN PERIMETER BOARDS WITH BOTH FRONT WALL AND BACK WALL ASSEMBLIES.
- STARTING WITH AN OG15 BOARD, WORK UPWARDS STACKING BOARDS IN THE ORDER SHOWN.
- ATTACH EACH OG17 WITH SCREWS BEFORE THE NEXT BOARD IS INSTALLED.

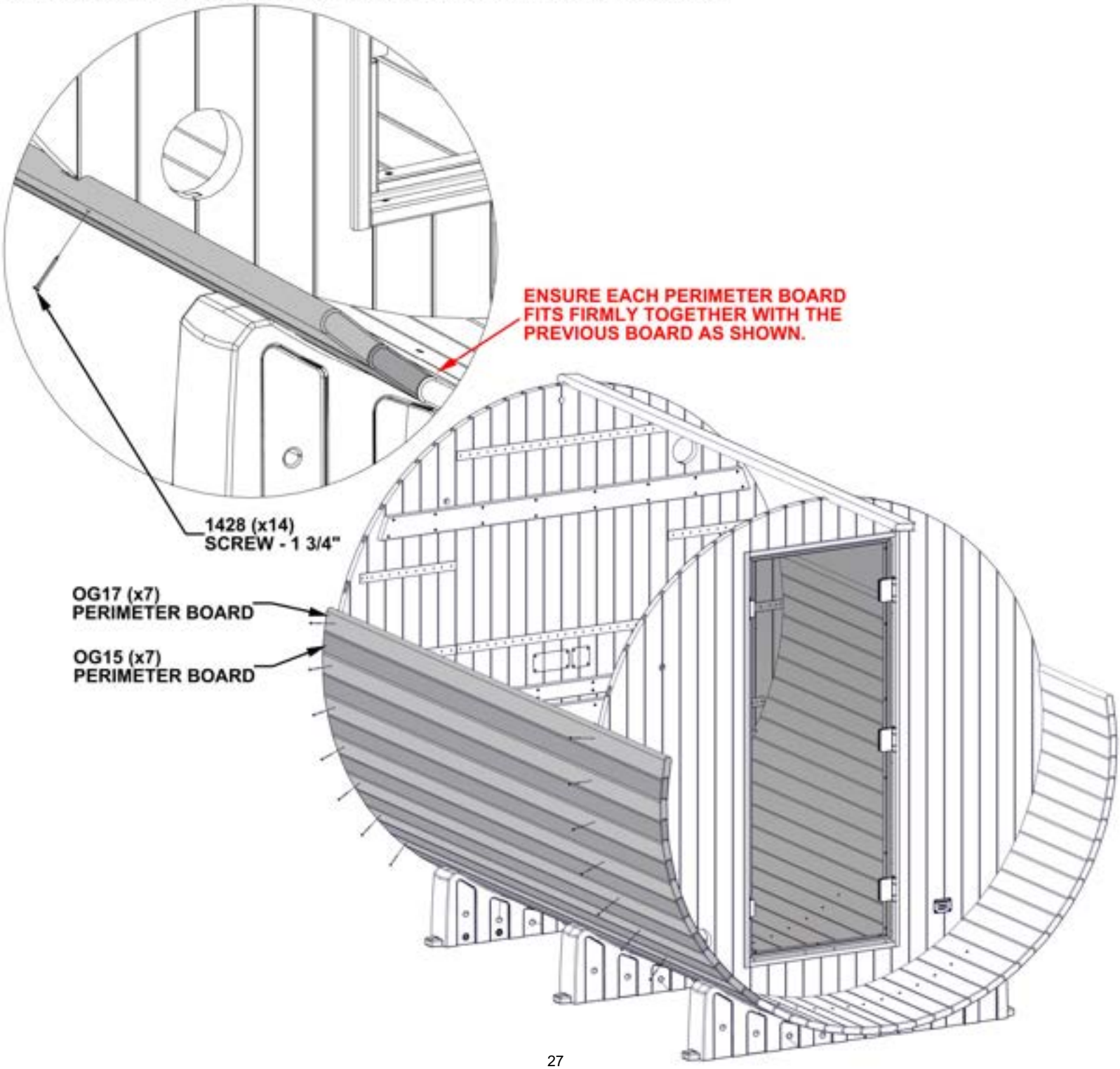

STEP 13 - HANDLE ASSEMBLY

QTY	PART NUMBER	DESCRIPTION
2	H101402	SCREW TFH 1/4-20 X 1 5/8 SS
4	H101403	POLY WASHER



AM01 (x1) DOOR HANDLE - W4L21861
2 1/4"x3"x10 3/16" (57x76x258)



AM02 (x1) DOOR HANDLE - W2A04795
2 1/4"x3"x10 3/16" (57x76x258)

- ATTACH DOOR HANDLES AS SHOWN.
- DO NOT OVERTIGHTEN.

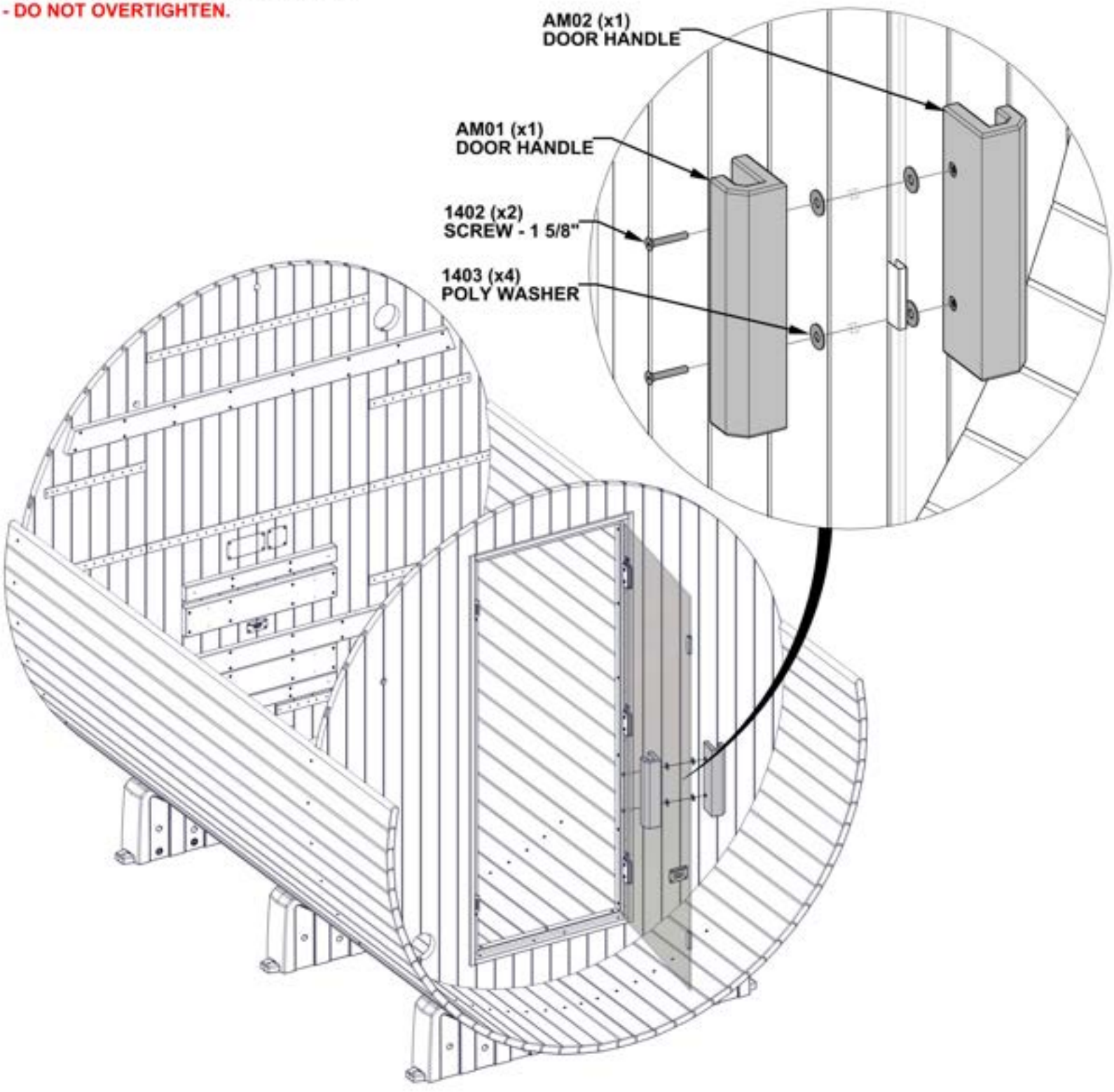

STEP 14 - BENCH ASSEMBLY

QTY	PART NUMBER	DESCRIPTION
9	H101429	SCREW TFH 8X2 SS-BLK
4	H101431	SCREW TFH 8X2 1/2 SS-BLK
4	H101443	SCREW TWH 8x1 1/2 SS-BLK

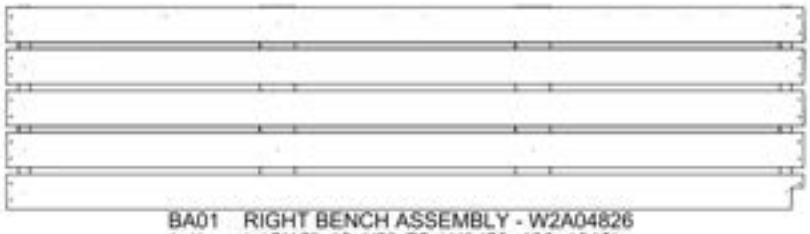

BA01 (x1) RIGHT BENCH ASSEMBLY - W2A04826
1 15/16"x19 1/8"x75 1/4" (50x486x1912)



OG04 (x2) BENCH BRACE - W4L21860
1 3/16"x3 3/8"x16 3/8" (30x86x416)

1) INSTALL BENCH BRACE OG04 TO BENCH ASSEMBLY. (DETAIL 'A')
2) PUSH THE BENCH WITH BENCH BRACE BOARD AGAINST THE WALL UNTIL IT MAKES CONTACT WITH THE SIDEWALL.
3) CHECK THE ALIGNMENT OF THE HOLES ON EACH END OF THE BENCH WITH THE PILOT HOLES ON THE CLEATS MOUNTED TO THE WALL. (DETAIL 'B')
4) ENSURE BENCH BRACE IS SQUARE WITH BENCH AND INSTALL (4) 1443 SCREWS. (DETAIL 'C')
5) LEVEL THE BENCH BOTH FRONT-TO-BACK AND SIDE-TO-SIDE; THEN ATTACH TO SIDEWALL AS SHOWN. (DETAIL 'D')

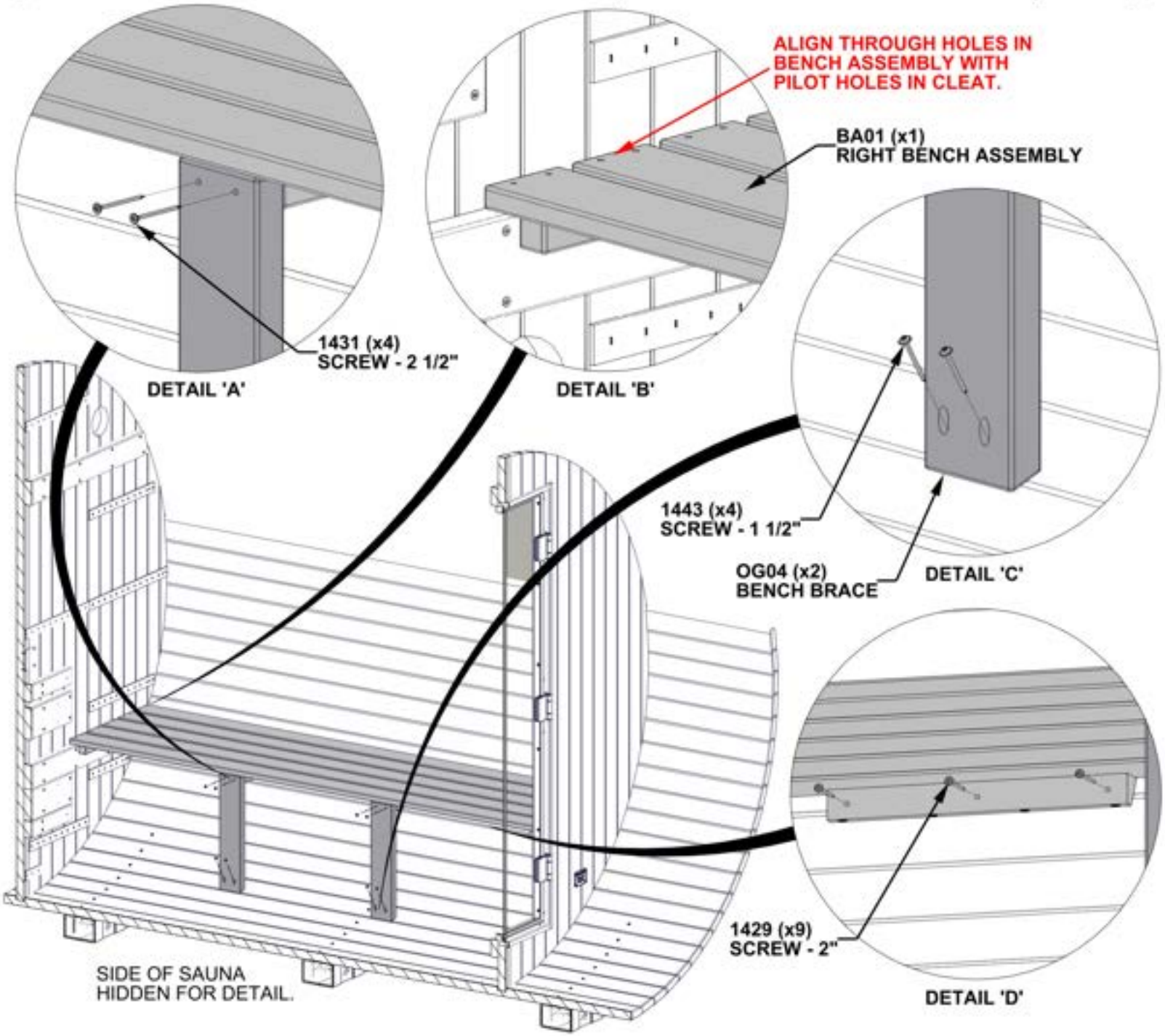

STEP 15 - BENCH ASSEMBLY

QTY	PART NUMBER	DESCRIPTION
9	H101429	SCREW TFH 8X2 SS-BLK
4	H101431	SCREW TFH 8X2 1/2 SS-BLK
4	H101443	SCREW TWH 8x1 1/2 SS-BLK

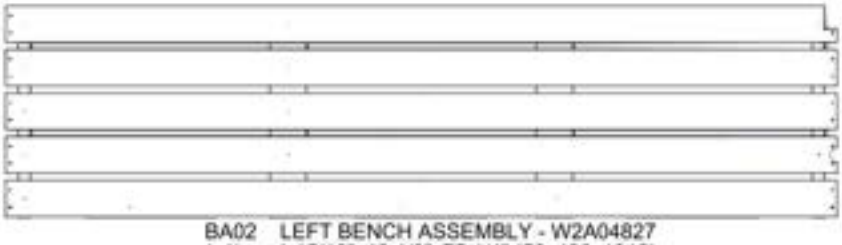

BA02 (x1) LEFT BENCH ASSEMBLY - W2A04827
1 15/16"x19 1/8"x75 1/4" (50x486x1912)



OG04 (x2) BENCH BRACE - W4L21860
1 3/16"x3 3/8"x16 3/8" (30x86x416)

1) INSTALL BENCH BRACE OG04 TO BENCH ASSEMBLY. (DETAIL 'A')
2) PUSH THE BENCH WITH BENCH BRACE BOARD AGAINST THE WALL UNTIL IT MAKES CONTACT WITH THE SIDEWALL.
3) CHECK THE ALIGNMENT OF THE HOLES ON EACH END OF THE BENCH WITH THE PILOT HOLES ON THE CLEATS MOUNTED TO THE WALL. (DETAIL 'B')
4) ENSURE BENCH BRACE IS SQUARE WITH BENCH AND INSTALL (2) 1443 SCREWS. (DETAIL 'C')
5) LEVEL THE BENCH BOTH FRONT-TO-BACK AND SIDE-TO-SIDE; THEN ATTACH TO SIDEWALL AS SHOWN. (DETAIL 'D')

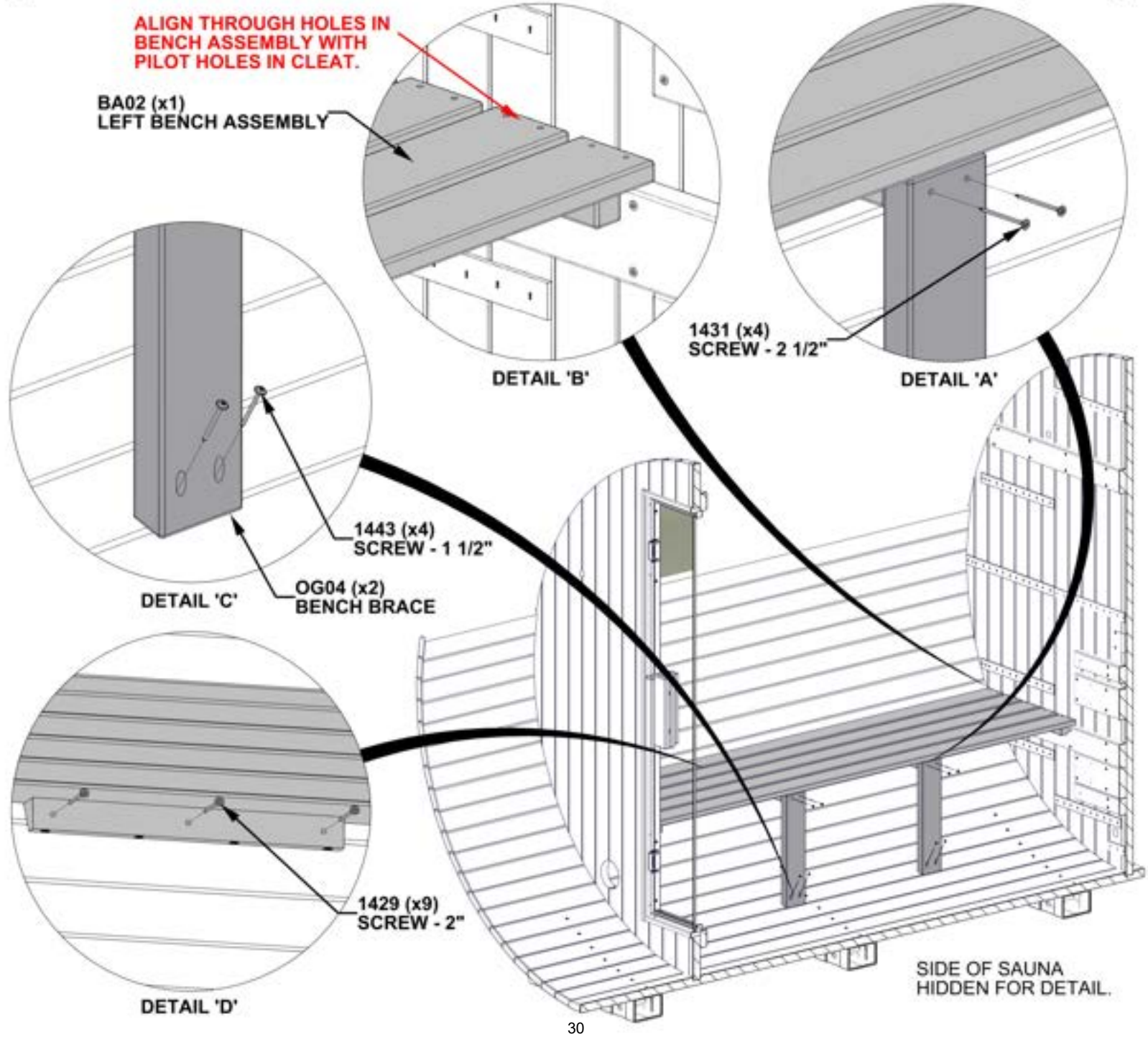

STEP 16 - BENCH ASSEMBLY

QTY	PART NUMBER	DESCRIPTION
38	H101428	SCREW TFH 8X1 3/4 SS-BLK

- ATTACH BENCHES TO CLEATS ON BOTH FRONT AND BACK WALLS AS SHOWN.

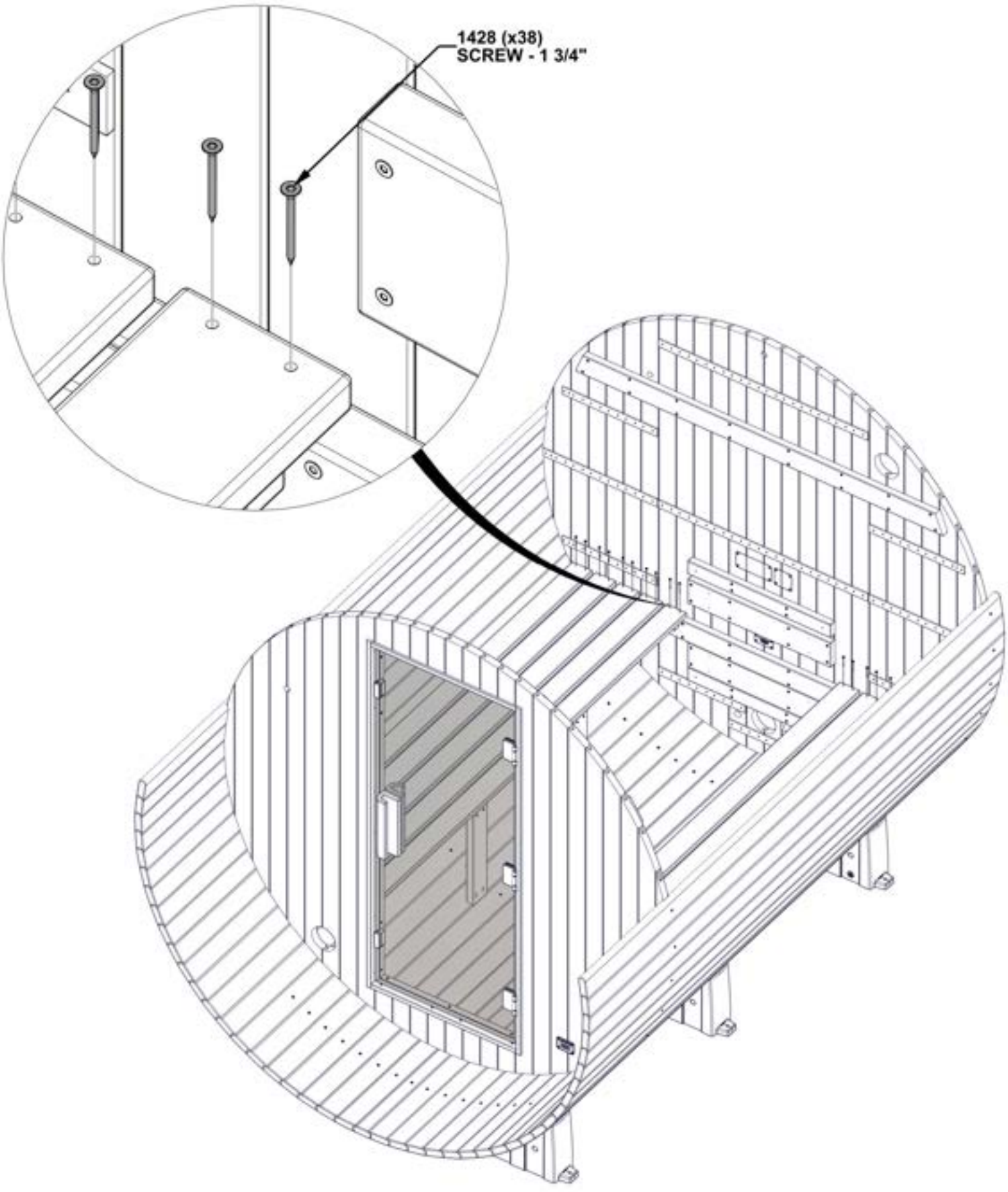

STEP 17 - BENCH ASSEMBLY

QTY	PART NUMBER	DESCRIPTION
16	H101430	SCREW TFH 8X2 1/4 SS-BLK

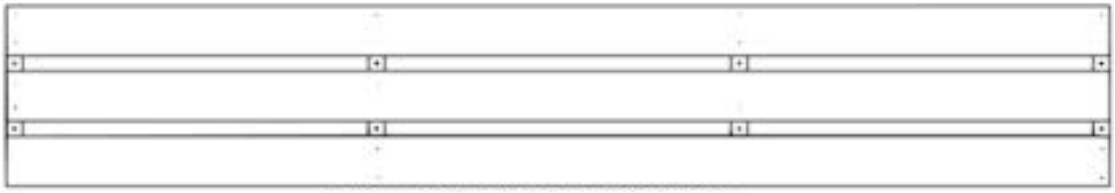

BR02 (x2) BENCH BACK REST - W2A04828
1 15/16"x12 1/16"x73 3/8" (50x306x1864)

- CENTER BACK REST AND ATTACH AS SHOWN.
- USE DIMENSIONS SHOWN AS A GENERAL GUIDE AND ADJUST TO YOUR OWN PREFERENCE.

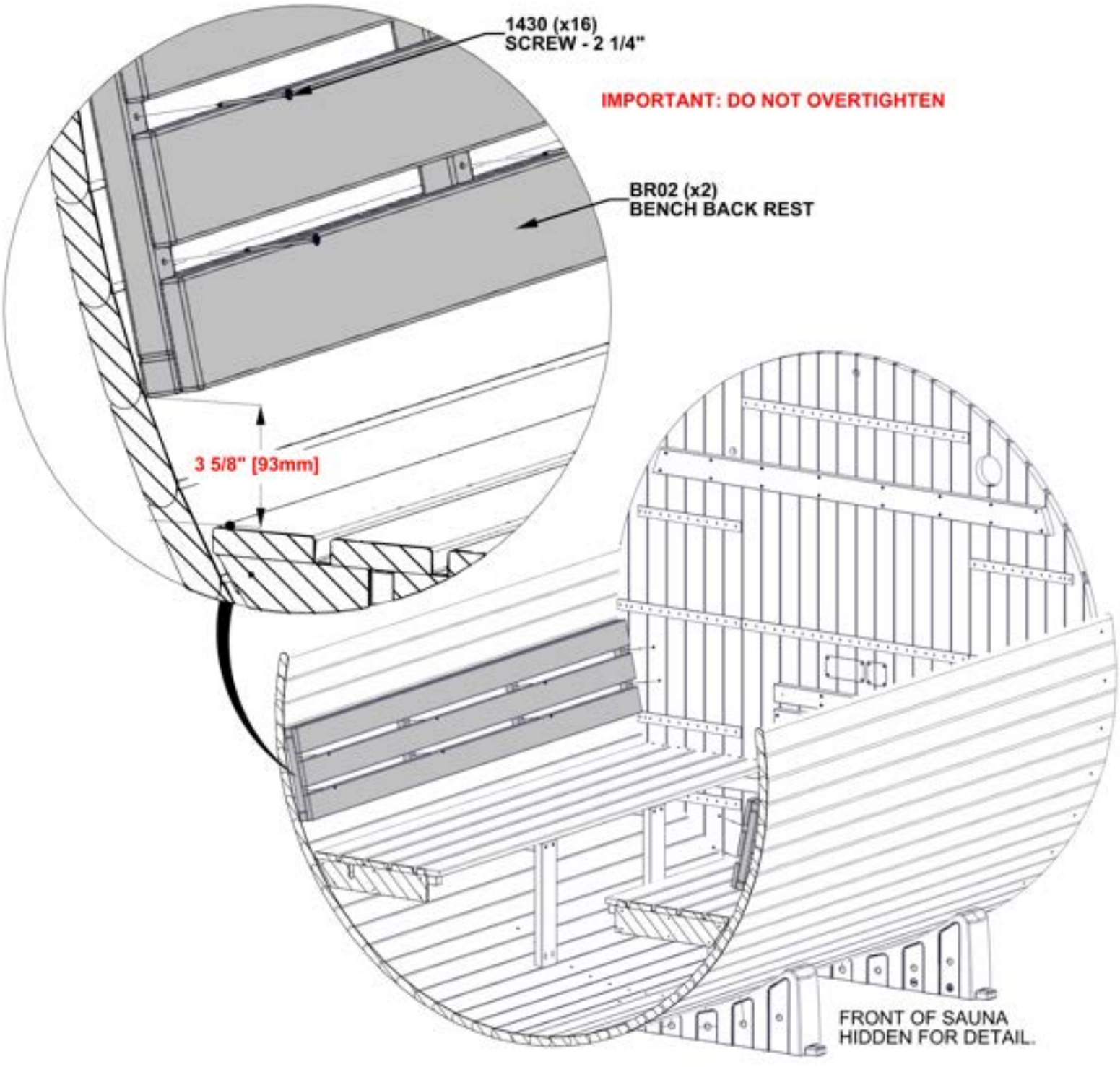

STEP 18 - FLOOR CLEAT INSTALLATION

QTY	PART NUMBER	DESCRIPTION
4	H101429	SCREW TFH 8X2 SS-BLK



OO05 (x1) FLOOR SUPPORT - W4L21963
1 3/16"x1 3/16"x20 7/8" (30x30x530)

- CENTER FLOOR SUPPORT BOARD IN SAUNA.
- USE THE DIMENSION SHOWN FROM THE DOOR OPENING TO MARK THE CENTER OF THE OO05 BOARD.
- MAKE SURE THE BOARD IS LEVEL AND ATTACH AS SHOWN.

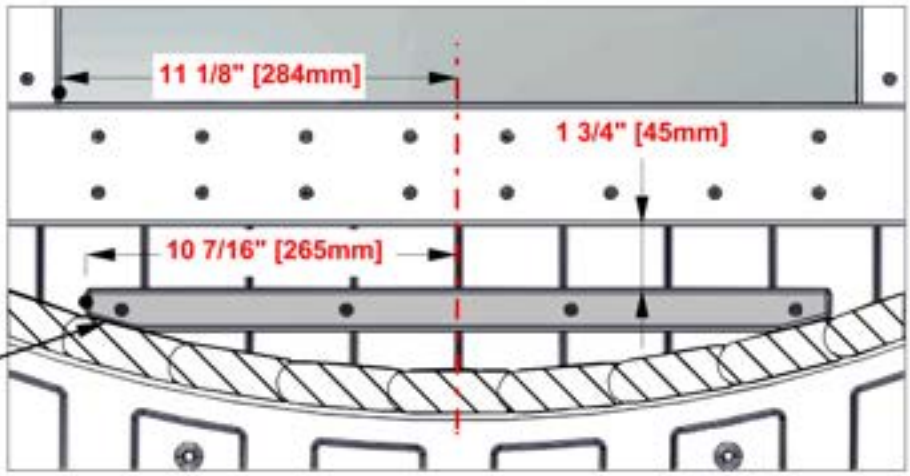

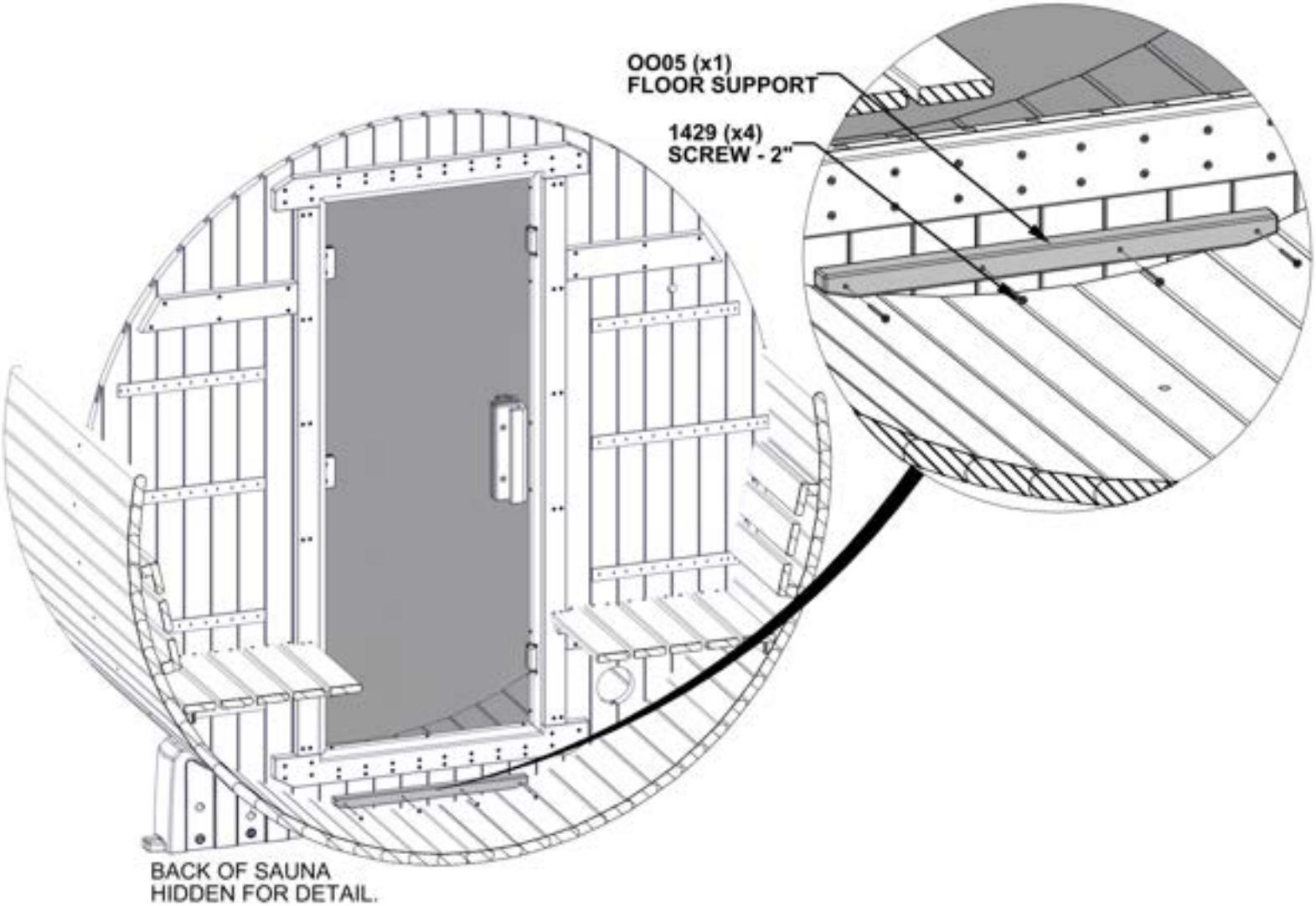

STEP 19 - FLOOR CLEAT INSTALLATION

QTY	PART NUMBER	DESCRIPTION
4	H101429	SCREW TFH 8X2 SS-BLK



OO05 (x1) FLOOR SUPPORT - W4L21963
1 3/16"x1 3/16"x20 7/8" (30x30x530)

- CENTER FLOOR SUPPORT BOARD IN SAUNA.
- USE THE DIMENSION SHOWN FROM THE DOOR OPENING TO MARK THE CENTER OF THE OO05 BOARD.
- MAKE SURE THE BOARD IS LEVEL AND ATTACH AS SHOWN.

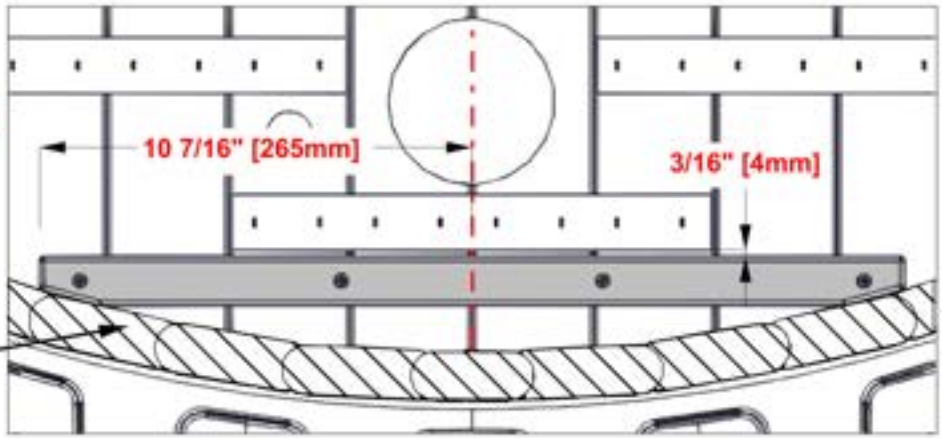

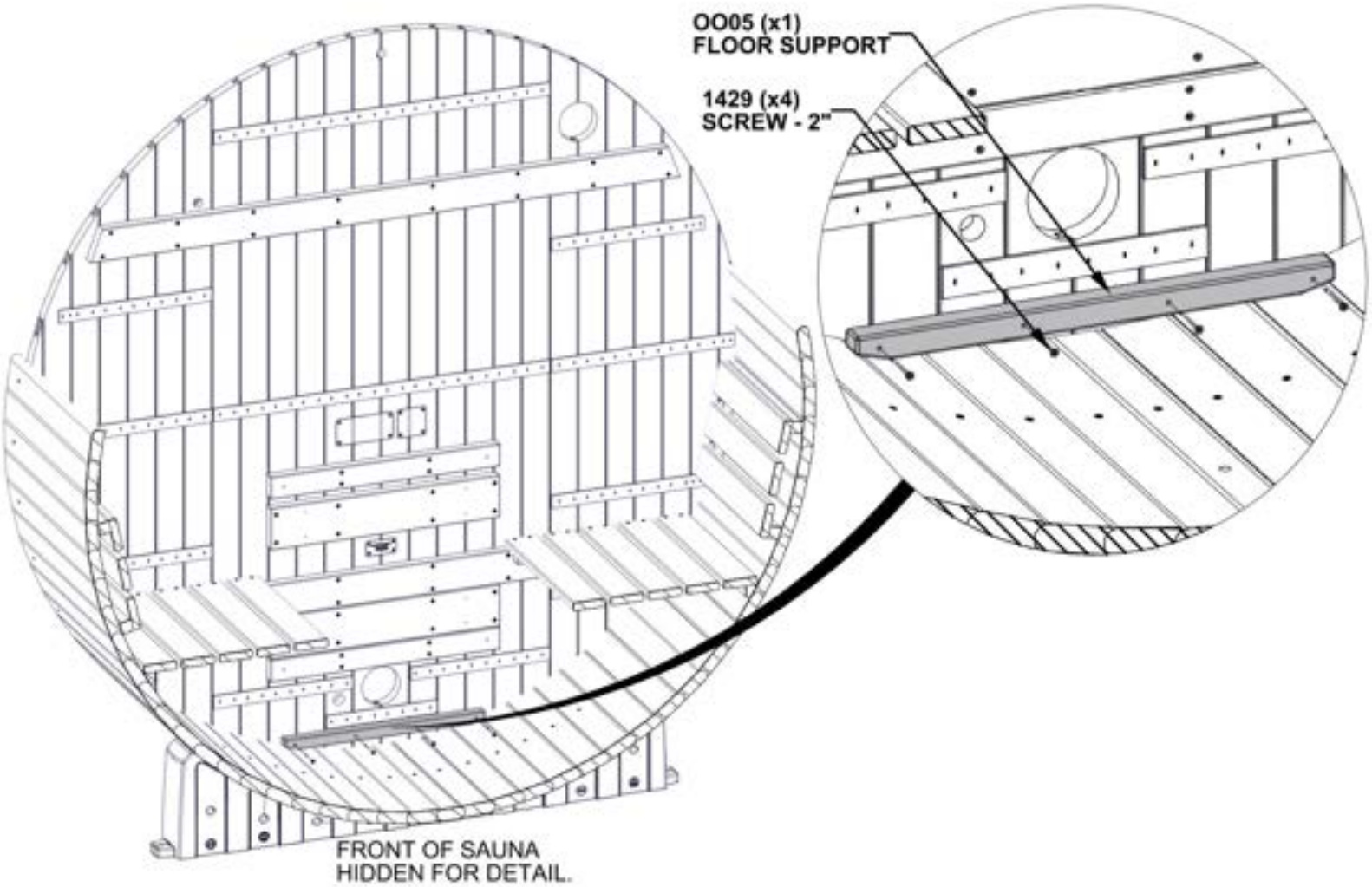

STEP 20 - FLOOR CLEAT INSTALLATION

QTY	PART NUMBER	DESCRIPTION
2	H101429	SCREW TFH 8X2 SS-BLK



OO03 FLOOR CLEAT - W4L21964
(x1) 1 3/16"x1 3/16"x20 7/8" (30x30x530)

- LOCATE OO03 BOARD USING DIMENSION SHOWN.
- ENDS ARE TO BE FLUSH WITH PREVIOUSLY INSTALLED CLEAT.

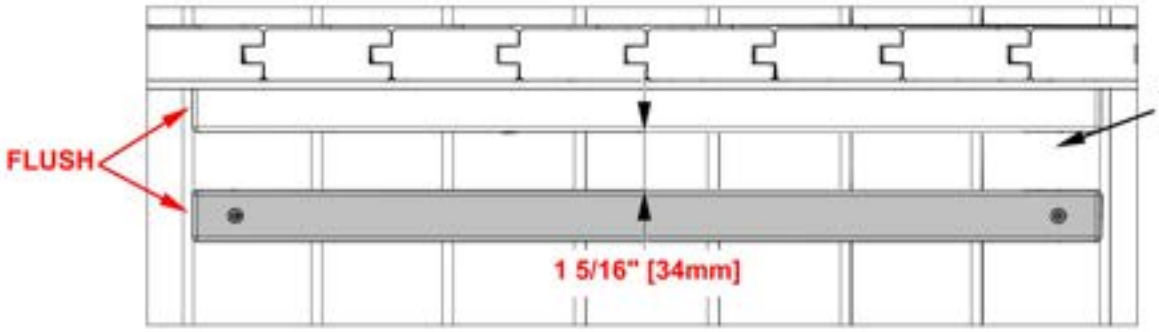

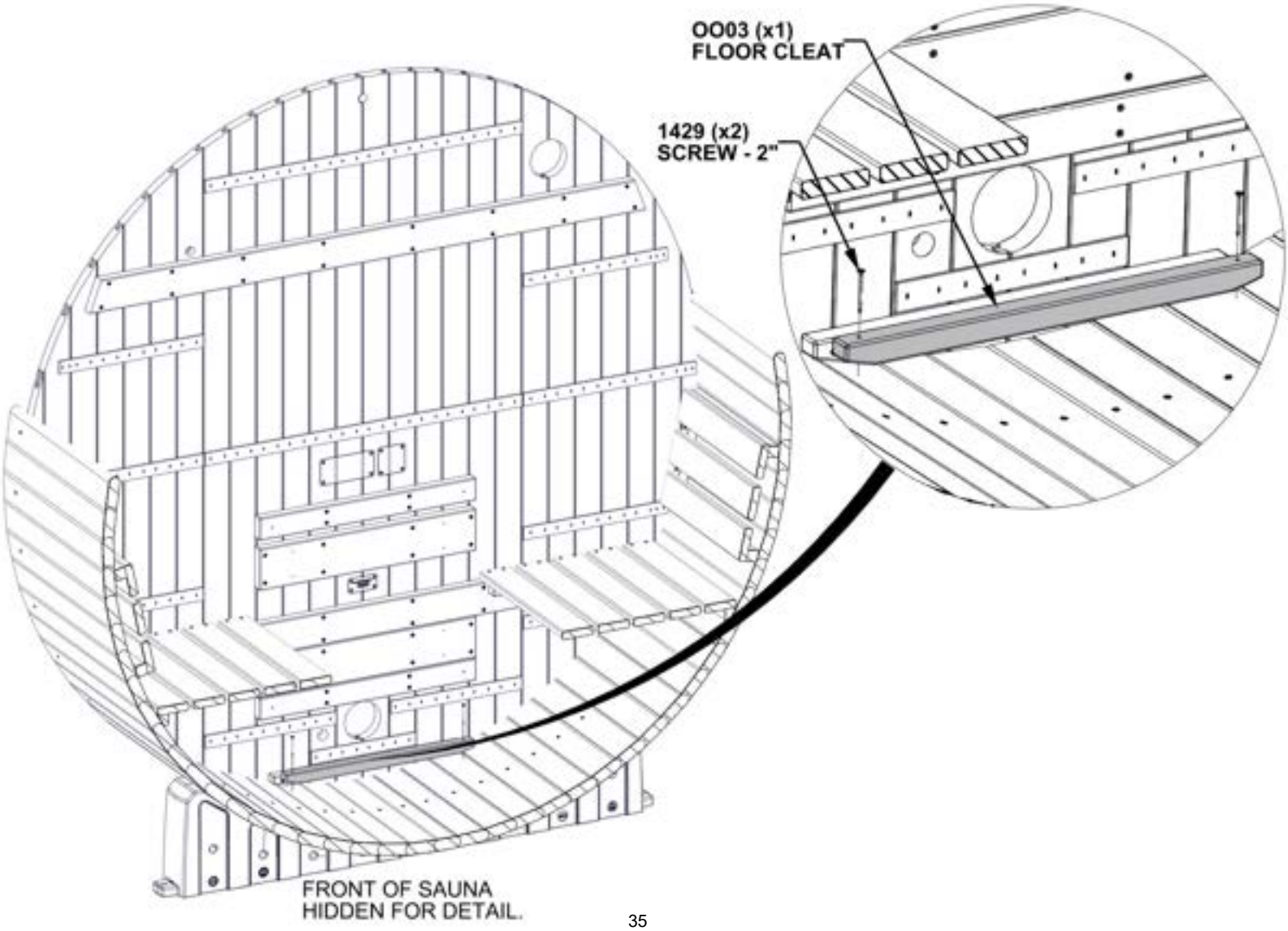

STEP 21 - FLOOR INSTALLATION

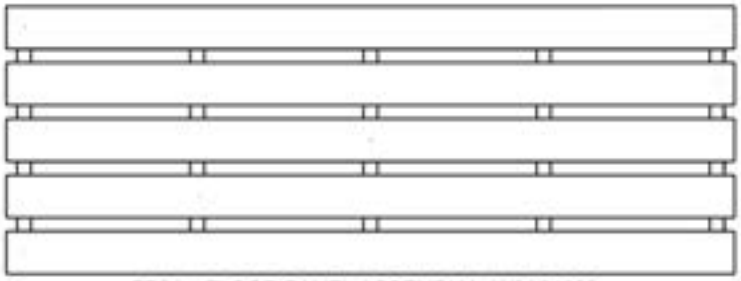

FP01 (x1) FLOOR PANEL ASSEMBLY - W2A04829
1 15/16"x20 11/16"x73 7/8" (50x525x1876)

- SLIDE FLOOR PANEL ASSEMBLY AND CENTER IN SAUNA.
- FLOOR PANEL SHOULD SEAT BETWEEN TWO PREVIOUSLY INSTALLED CLEATS.
- FLOOR PANEL WILL NOT BE FASTENED DOWN. IT'S DESIGNED TO BE REMOVABLE TO ALLOW FOR CLEANING UNDERNEATH THE FLOOR PANEL.

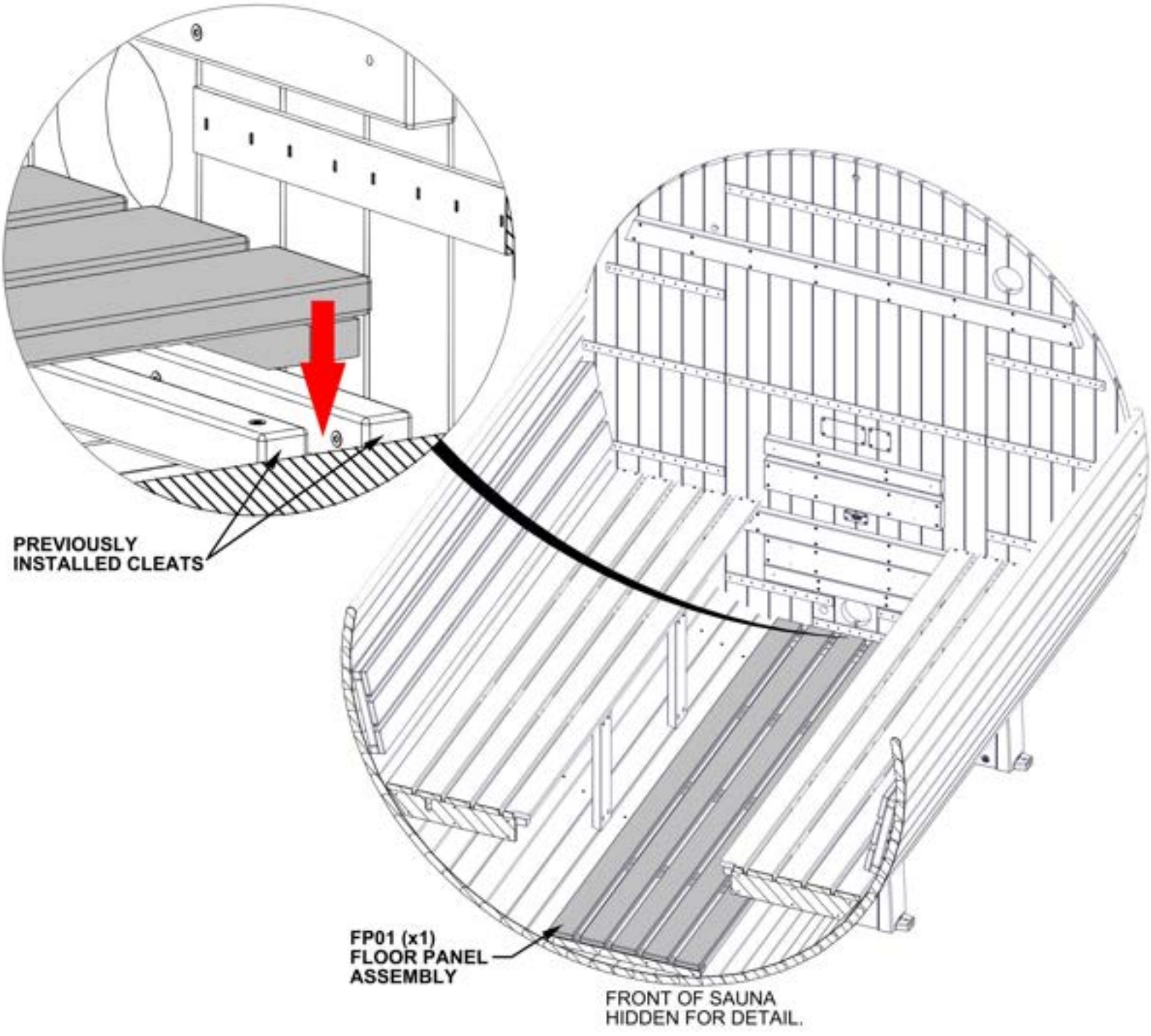

STEP 22 - TEMPERATURE SENSOR INSTALLATION

QTY	PART NUMBER	DESCRIPTION
2	H101440	SCREW TWH 8x1 SS-BLK



A6P01714 (x1) TEMPERATURE SENSOR



A6P01467 (x1) SILICONE GROMMET 25mm

IMPORTANT: INSTALL THE TEMPERATURE SENSOR EXACTLY AS SHOWN IN THESE INSTRUCTIONS. THE SENSOR LOCATION HAS BEEN SPECIFICALLY ENGINEERED AND TESTED TO ENSURE SAFE OPERATION AND ACCURATE TEMPERATURE CONTROL. RELOCATING THE SENSOR OR INSTALLING IT IN AN INCORRECT POSITION MAY RESULT IN INACCURATE TEMPERATURE READINGS, POOR HEATING PERFORMANCE, NUISANCE SHUTOFFS, OR OVERHEATING CONDITIONS.

ATTACH TEMPERATURE SENSOR ABOVE THE THROUGH HOLE HOLDING THE DIMENSION GIVEN.

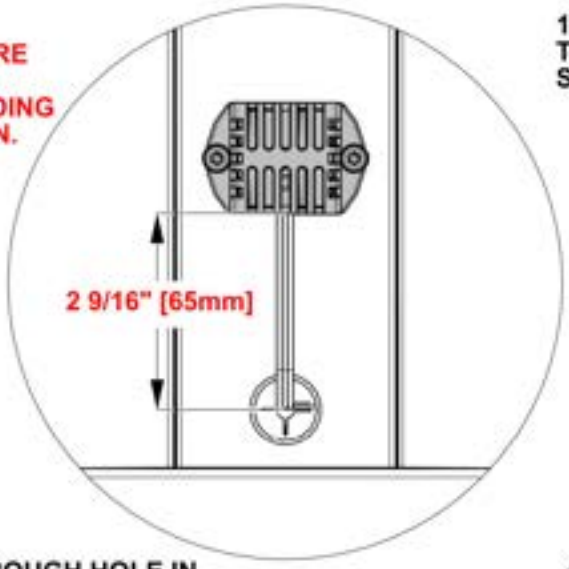

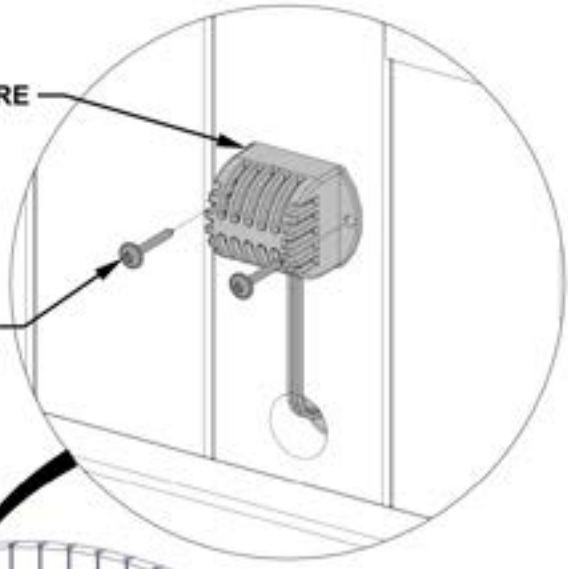

RUN CABLE THROUGH HOLE IN WALL PANEL AND THROUGH GROMMET AS SHOWN.

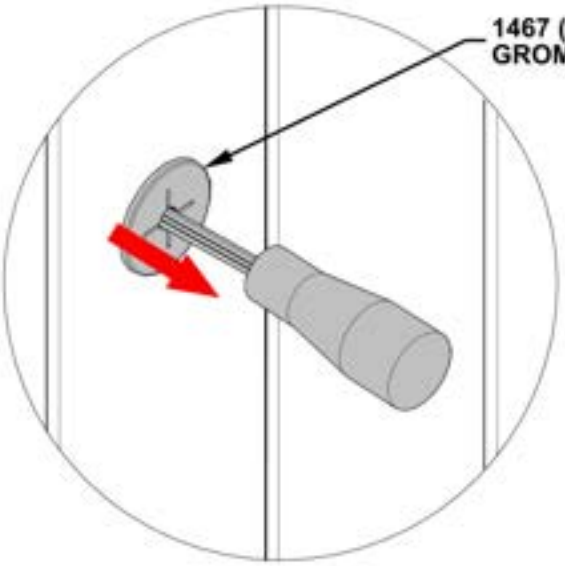

BACK VIEW

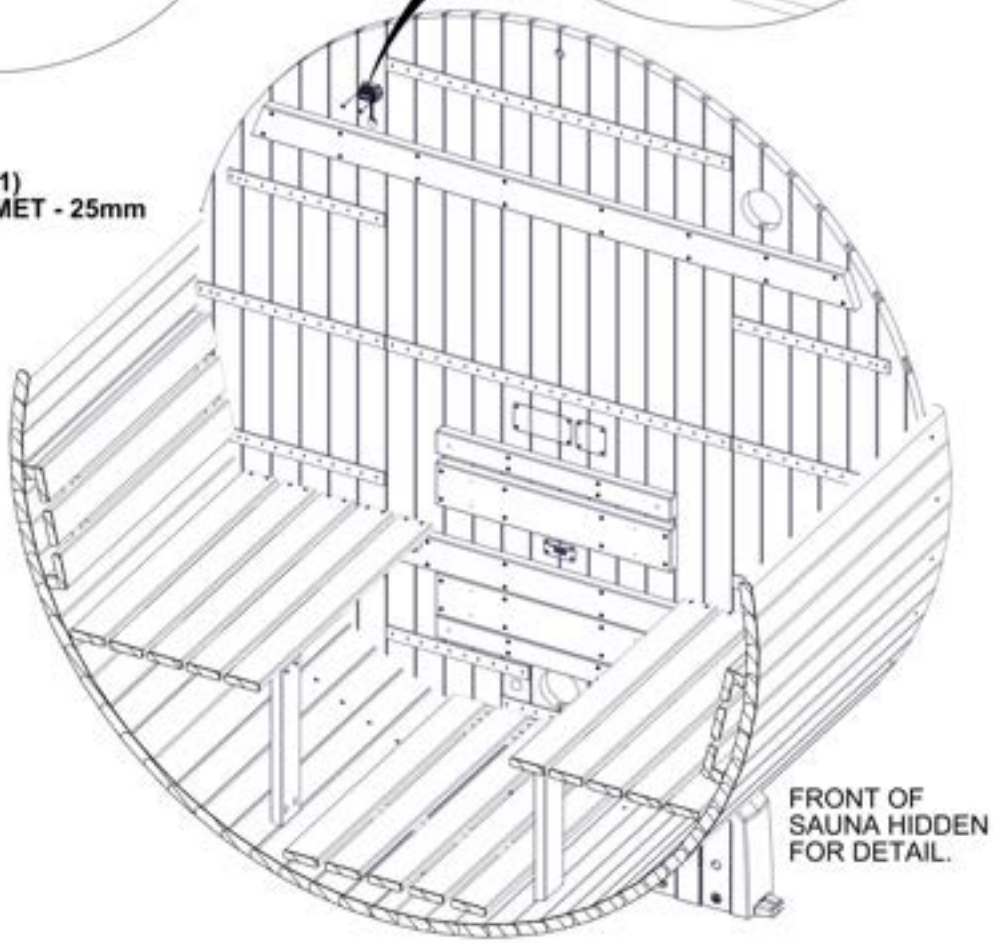

STEP 23 - CONTROL PANEL ASSEMBLY

QTY	PART NUMBER	DESCRIPTION
2	H100627	SCREW PFH 6x3/4 BLK



A4M05590-03 (x1) CONTROL PANEL MOUNTING BRACKET



A6P01467 (x1) SILICONE GROMMET 25mm

- CENTER MOUNTING BRACKET SLIGHTLY OVER CUTOUT IN WALL PANEL AND ATTACH AS SHOWN.
- INSERT GROMMET.

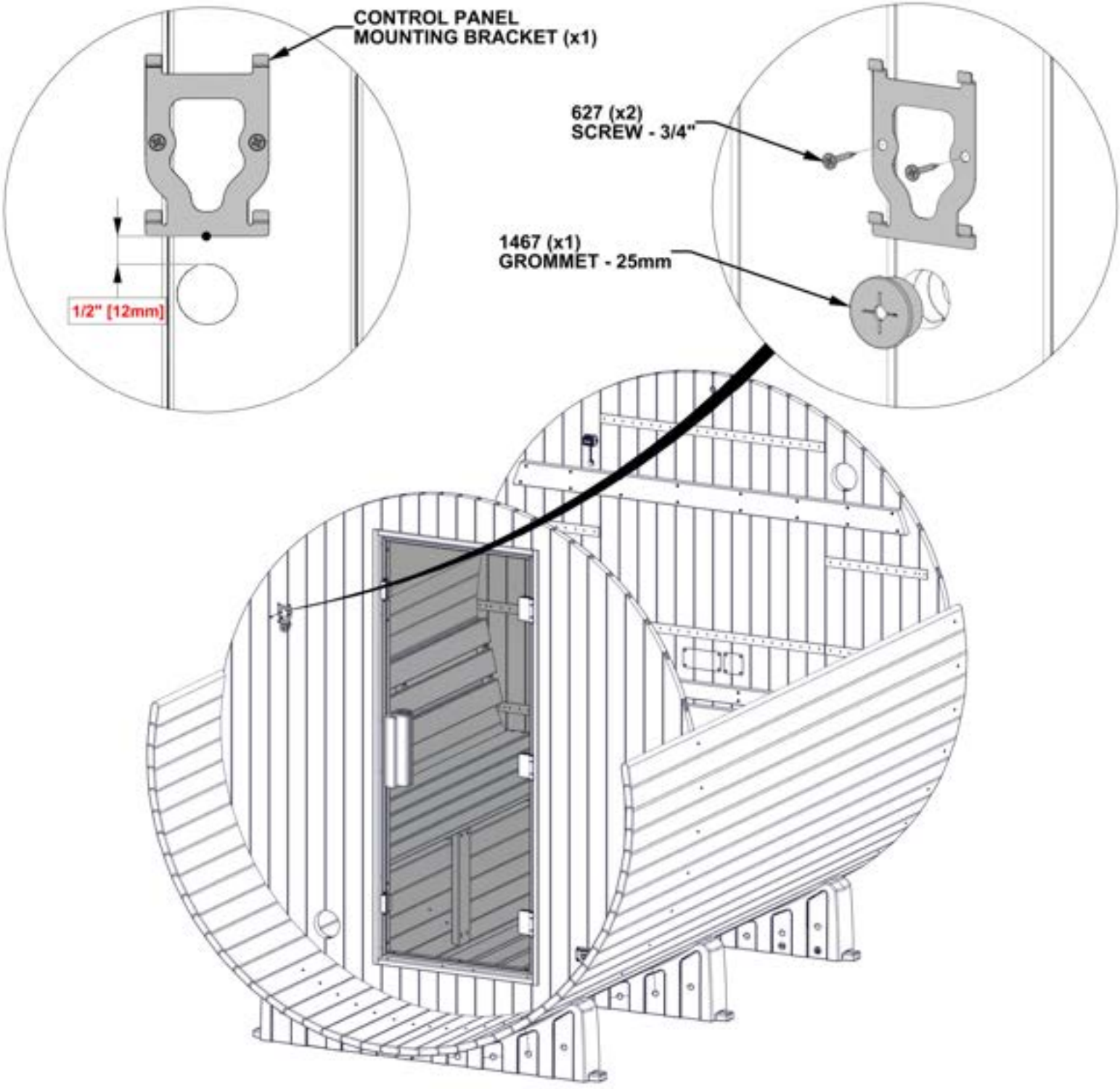

STEP 24 - CONTROL PANEL ASSEMBLY



A4M07172 (x1) SCREEN CONTROLLER

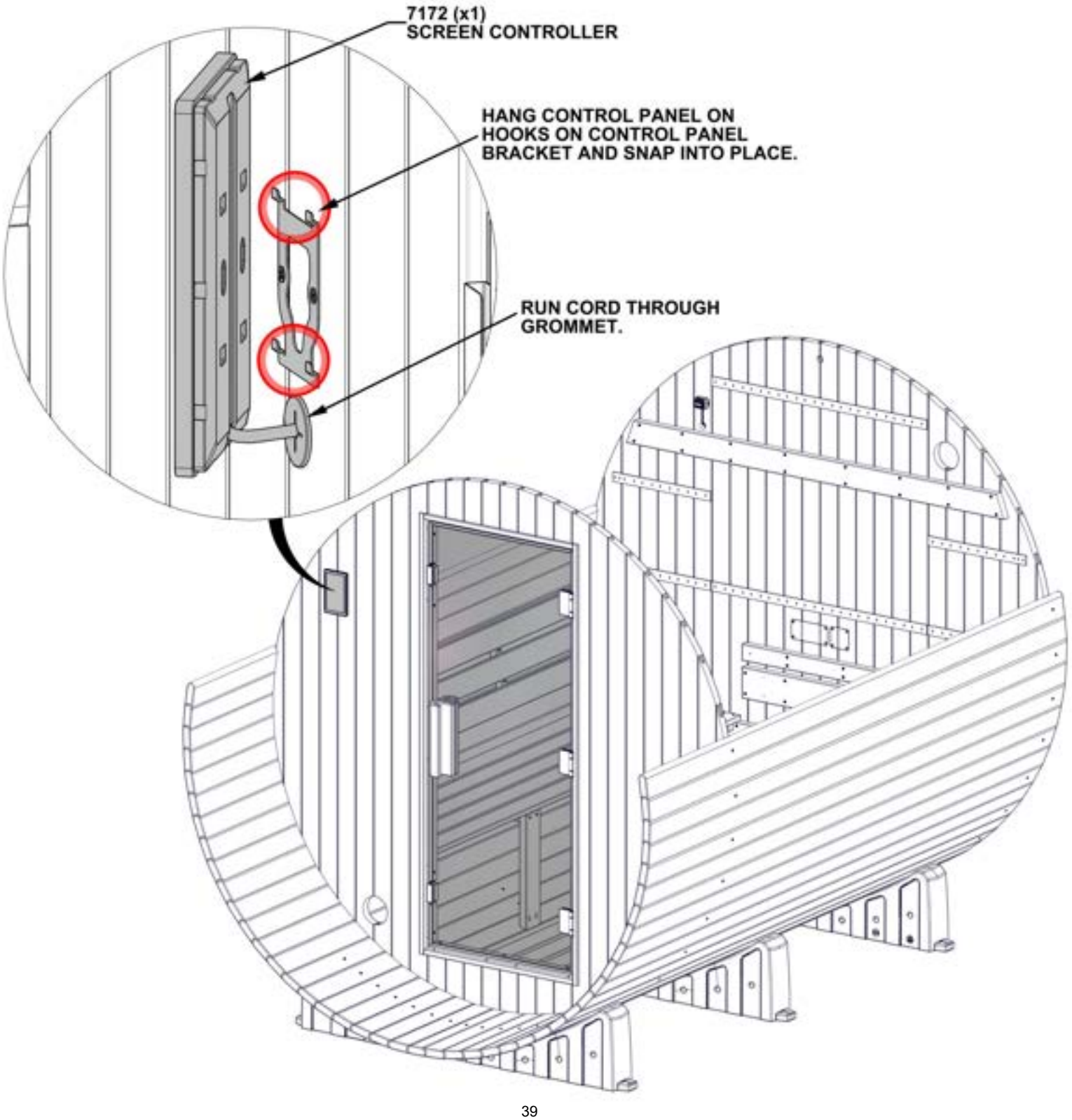

STEP 25 - WIREWAY ASSEMBLY

QTY	PART NUMBER	DESCRIPTION
8	H101429	SCREW TFH 8X2 SS-BLK



A4M05590-10 WIRING HARNESS
(x1)

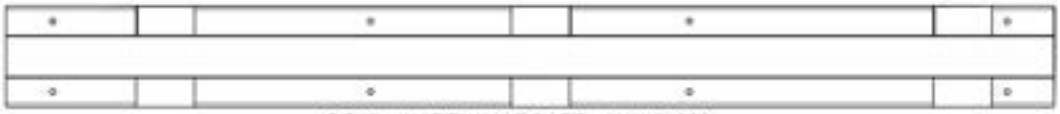

OG12 WIREWAY BOARD - W4L21999
(x1) 1 3/16"x3 3/8"x35 3/16" (30x86x894)

- CONNECT WIRING HARNESS TO CONTROL PANEL CABLE FROM PREVIOUS STEP. (DETAIL 'A')
- RUN CABLE THROUGH CUTOUT IN BENCH ASSEMBLY AS SHOWN. (DETAIL 'B')
- CENTER WIRE WAY BOARD OVER CABLE AND CUTOUT IN BENCH AND ATTACH AS SHOWN. (DETAIL 'C')
- BE CAUTIOUS WHEN INSERTING SCREWS TO PREVENT PINCHING OR PENETRATING CORDS.

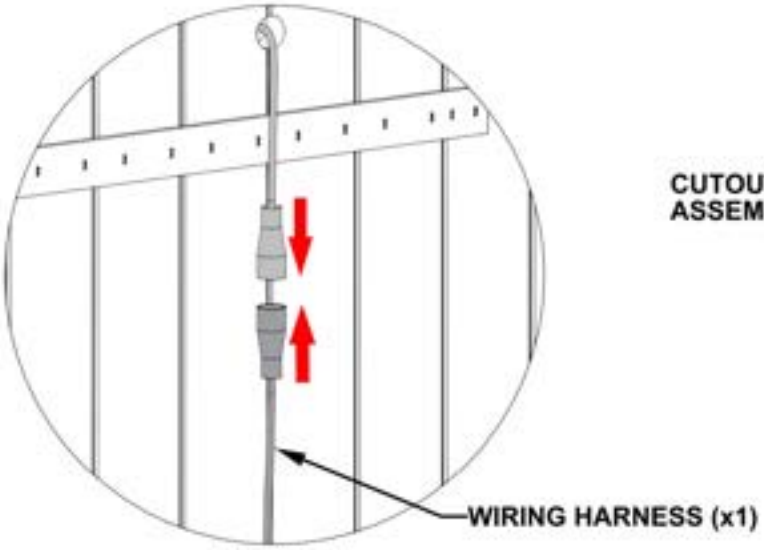

DETAIL 'A'

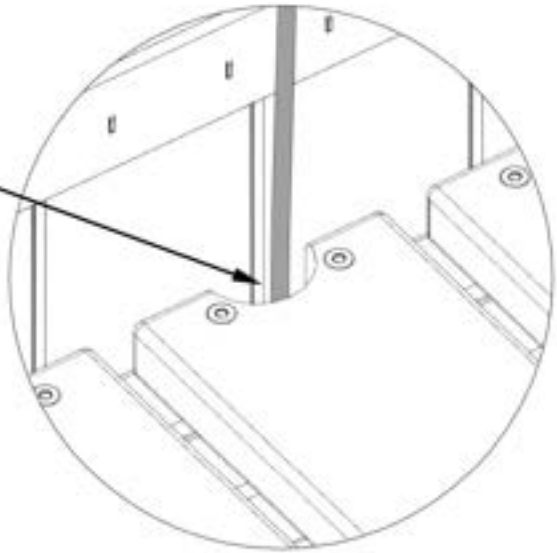

DETAIL 'B'

WIREWAY BOARD WILL ONLY FIT ONE WAY. ALIGN NOTCHES IN WIREWAY BOARD WITH CLEATS IN SIDEWALL.

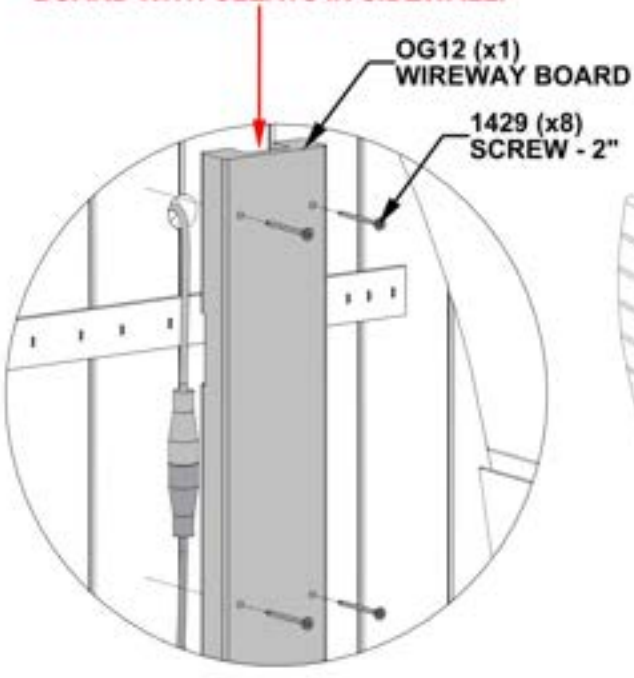

DETAIL 'C'

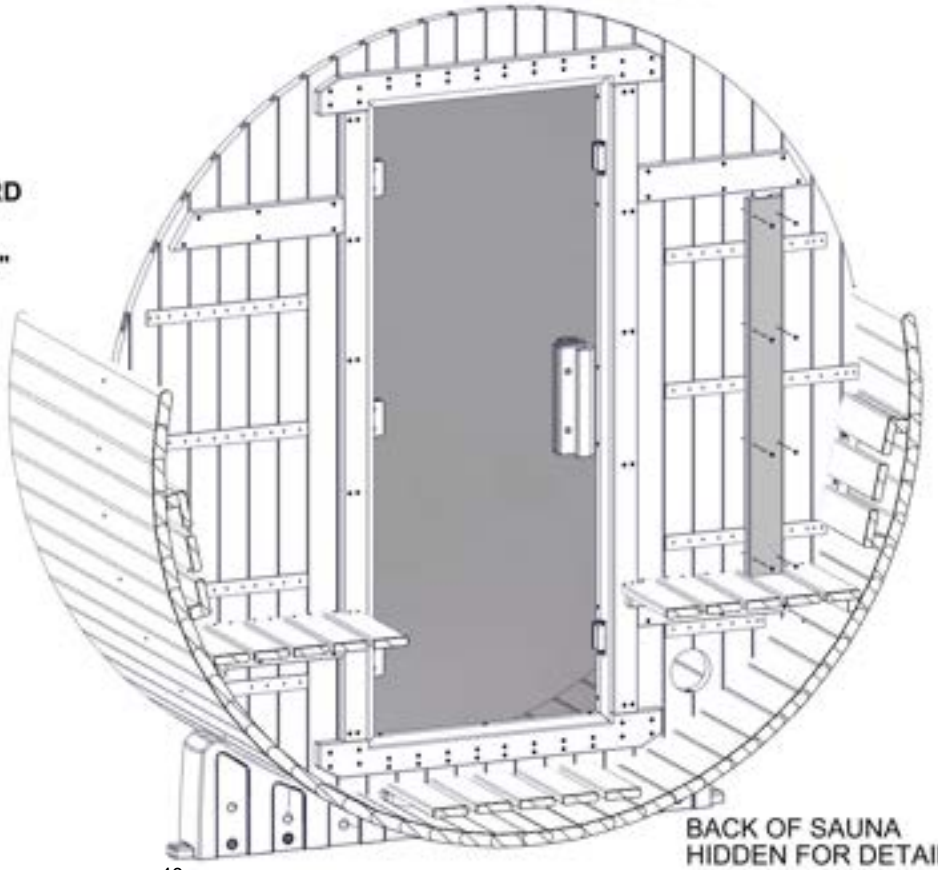

BACK OF SAUNA
HIDDEN FOR DETAIL.

STEP 26 - BACK REST ASSEMBLY

QTY	PART NUMBER	DESCRIPTION
12	H101429	SCREW TFH 8X2 SS-BLK

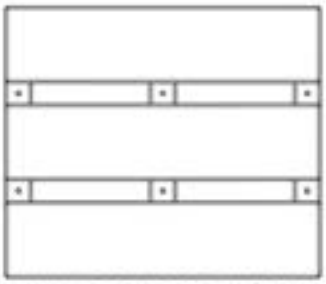

BR01 (x2) WALL BACK REST - W2A04790
1 15/16"X12 1/16"X14" (50x306x356)

- USE DIMENSIONS SHOWN AS A GENERAL GUIDE AND ADJUST TO YOUR OWN PREFERENCE.

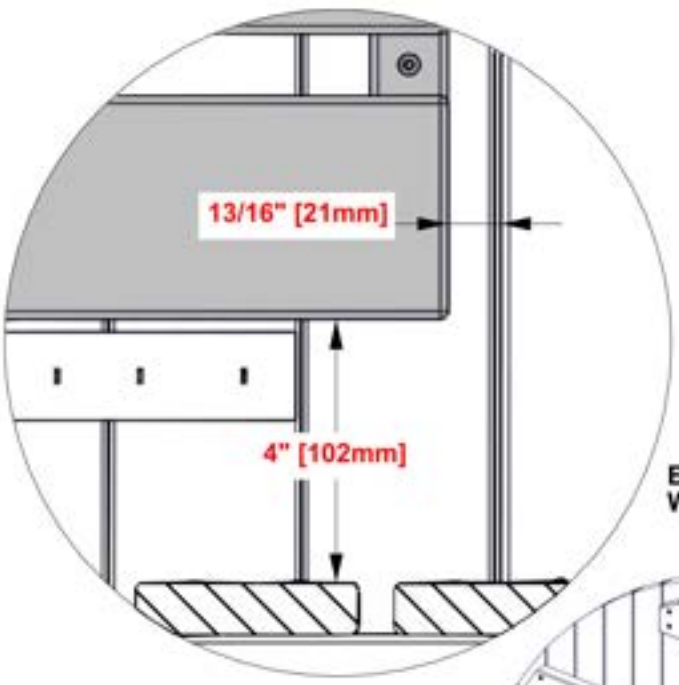

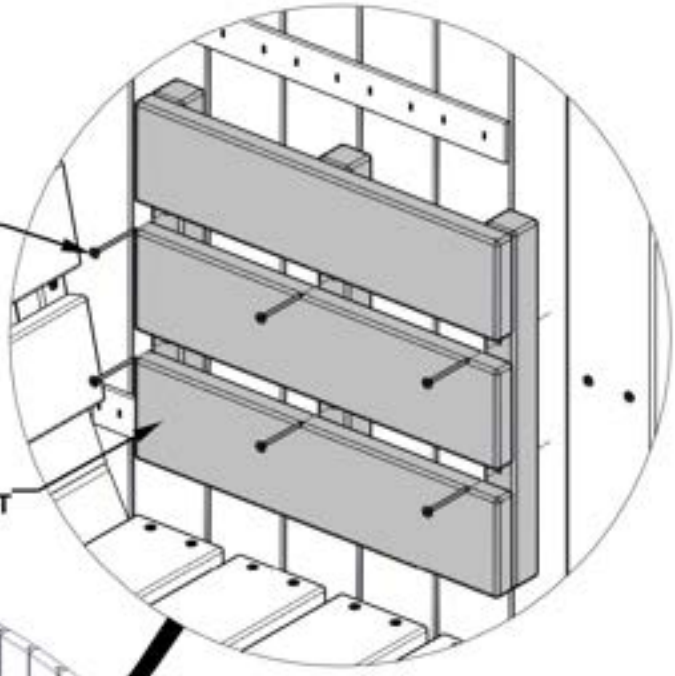

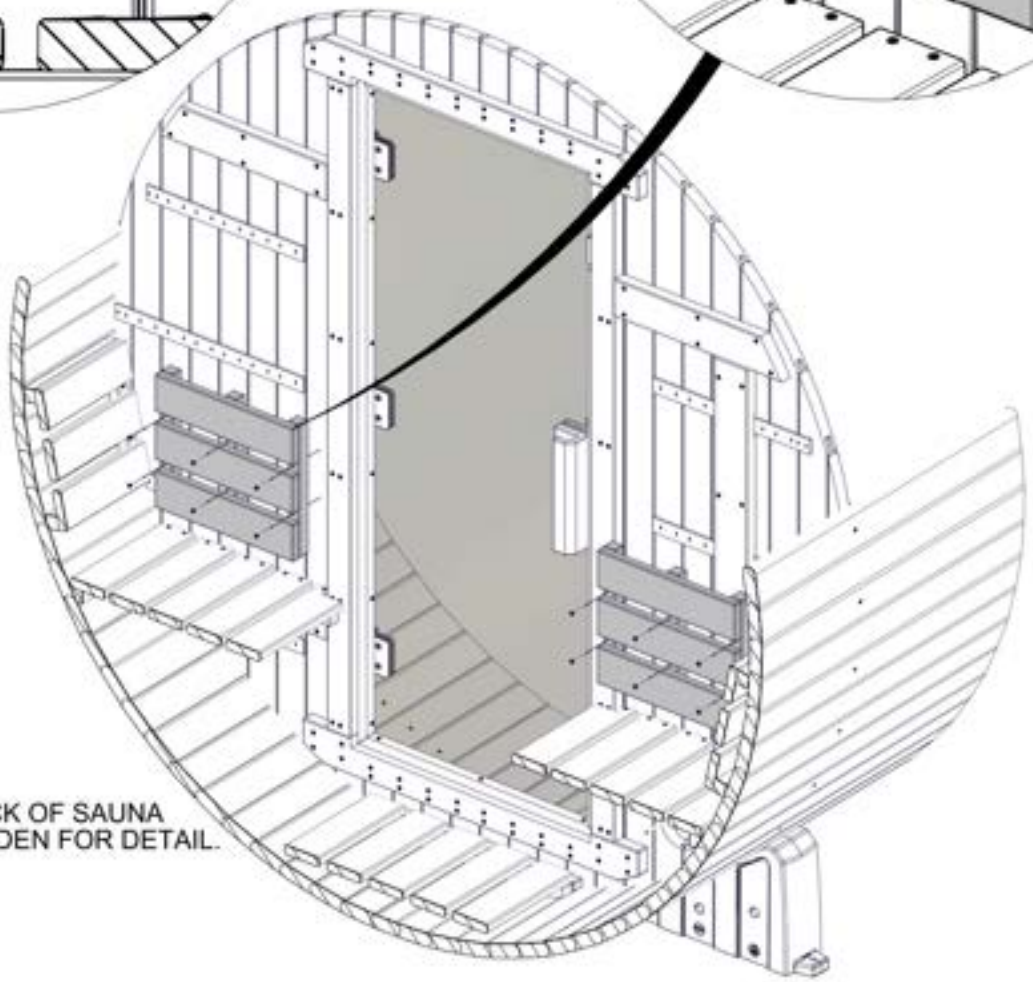

STEP 27 - FAN ASSEMBLY

QTY	PART NUMBER	DESCRIPTION
4	H101438	SCREW TWH 8x3/4 SS-BLK

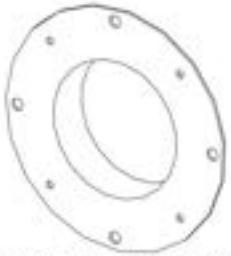

A4M07417 (x1) SAUNA FAN BRACKET

- CENTER BRACKET IN WALL PANEL HOLE AND ATTACH AS SHOWN.
- ENSURE SCREWS ARE INSERTED INTO SMALLER HOLES IN BRACKET.

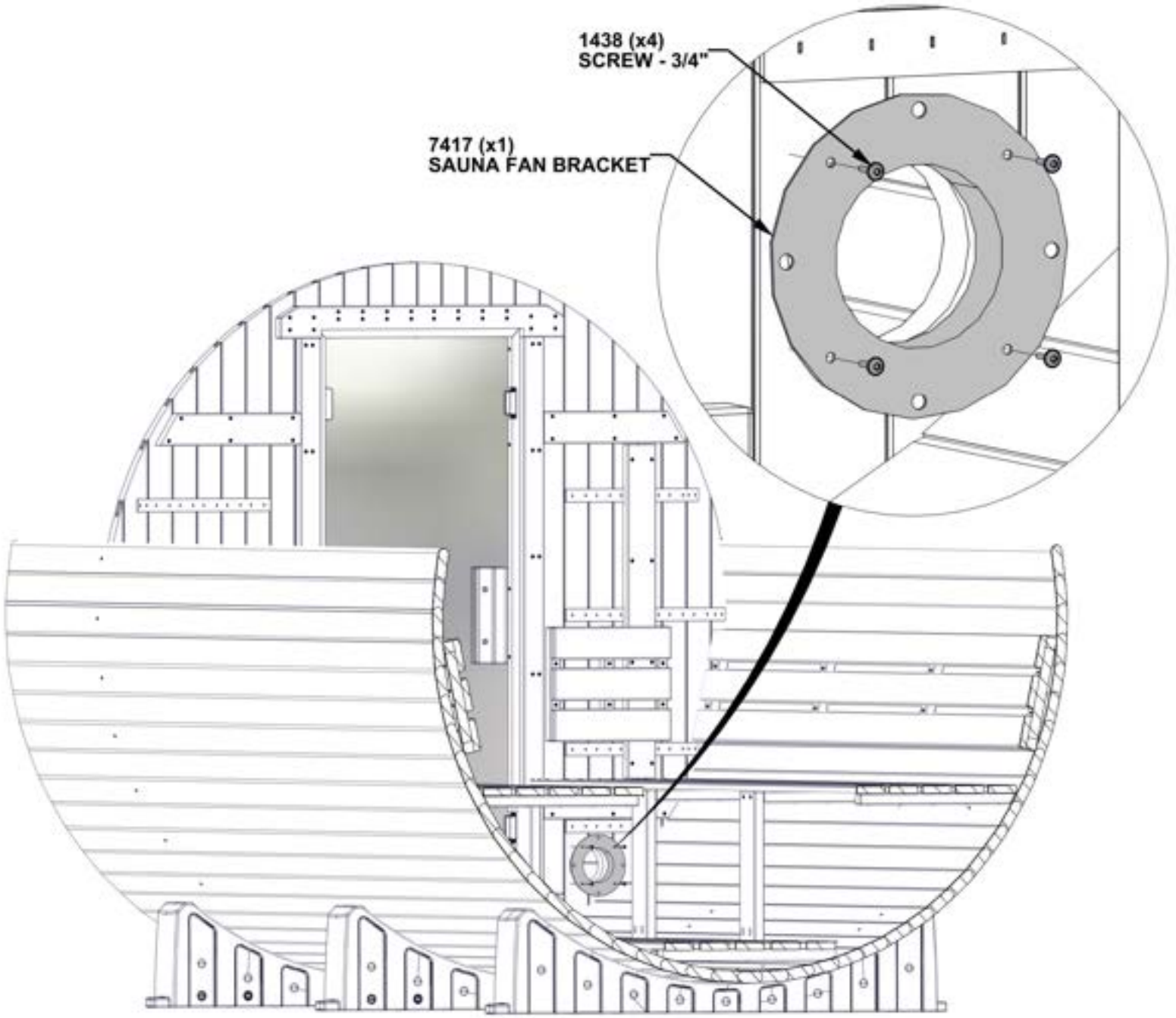

BACK OF SAUNA
HIDDEN FOR DETAIL.

STEP 28 - FAN ASSEMBLY

QTY	PART NUMBER	DESCRIPTION
4	H101446	SCREW TWH 8x2 1/4 SS-BLK



A4M07272 SAUNA FAN
(x1)

- ALIGN HOLES IN SAUNA FAN WITH LARGER HOLES IN BRACKET AND ATTACH AS SHOWN.
- FOR SAFETY, ATTACH METAL GUARD AS SHOWN.

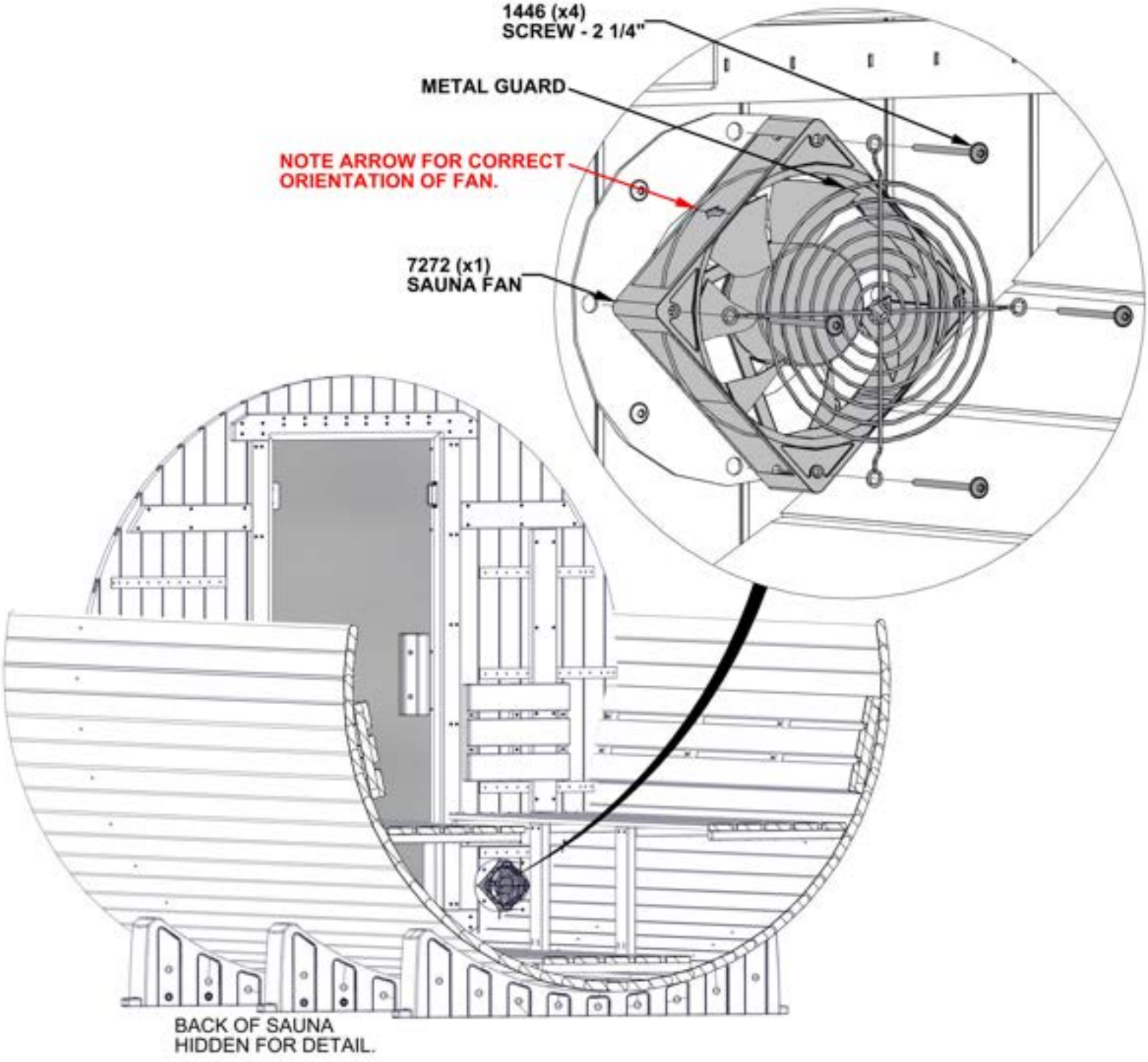

STEP 29 - WIREWAY ASSEMBLY

QTY	PART NUMBER	DESCRIPTION
8	H101431	SCREW TFH 8X2 1/2 SS-BLK



AK01 (x1) WIREWAY COVER - W4L22562
5/16"x3 3/8"x73" (8x86x1854)

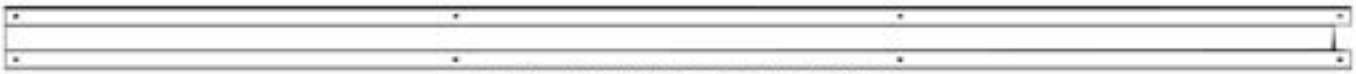

OG14 (x1) WIREWAY BOARD - W4L23473
1 3/16"x3 3/8"x73" (30x86x1854)

- RUN WIRING HARNESS CABLE BETWEEN AK01 AND OG14 ENSURING THAT CABLE RUNS IN CHANNELED PORTION.
- RUN WIRING FOR SAUNA FAN THROUGH NOTCH AND CHANNELED PORTION OF OG14
- NOTE, THE WIRING HARNESS EXCESS CAN BE BUNDLED WITH PROVIDED ZIP CABLE TIES.
- USE RIGHT ANGLE DRILL ADAPTER TO INSERT BACK SCREWS.
- RUN ALL WIRING THROUGH HOLE IN BACK WALL.
- BE CAUTIOUS WHEN INSERTING SCREWS TO PREVENT PINCHING OR PENETRATING CORDS.

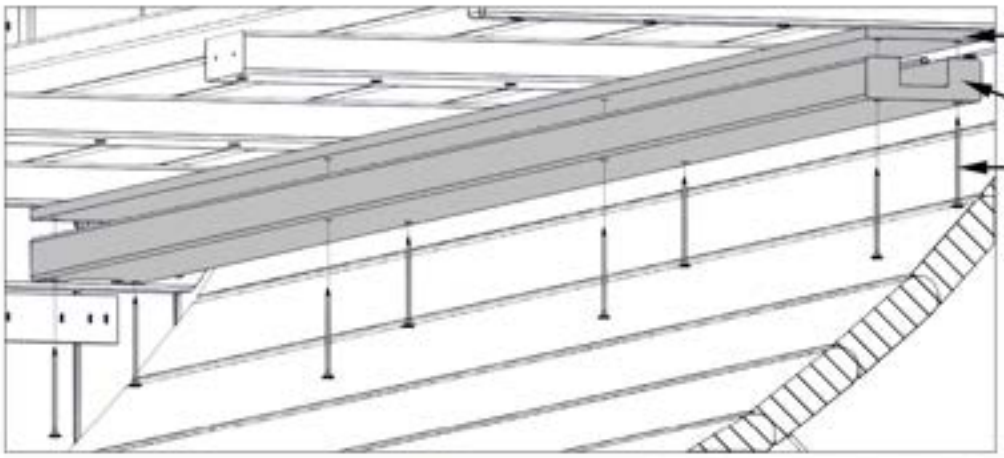

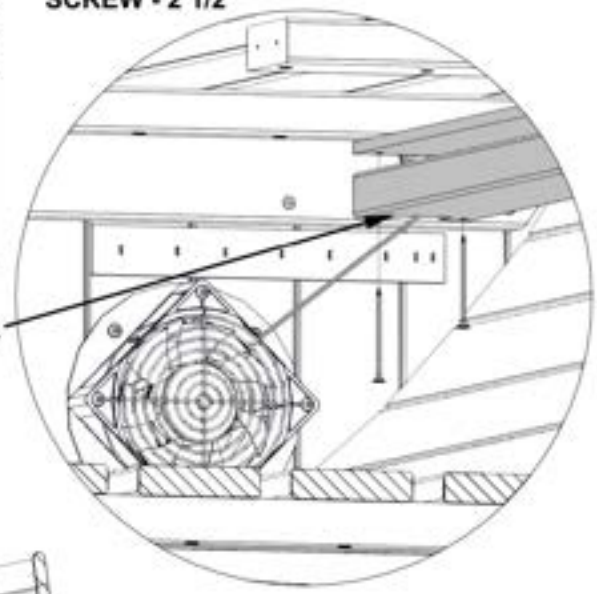

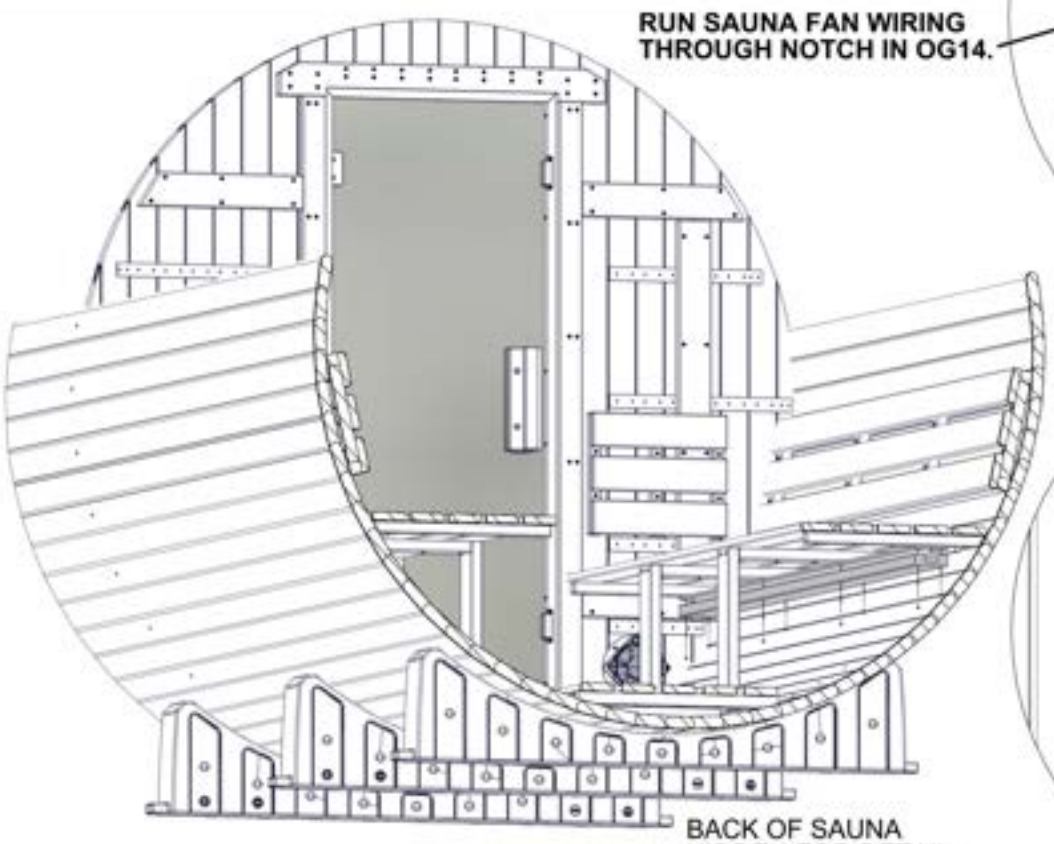

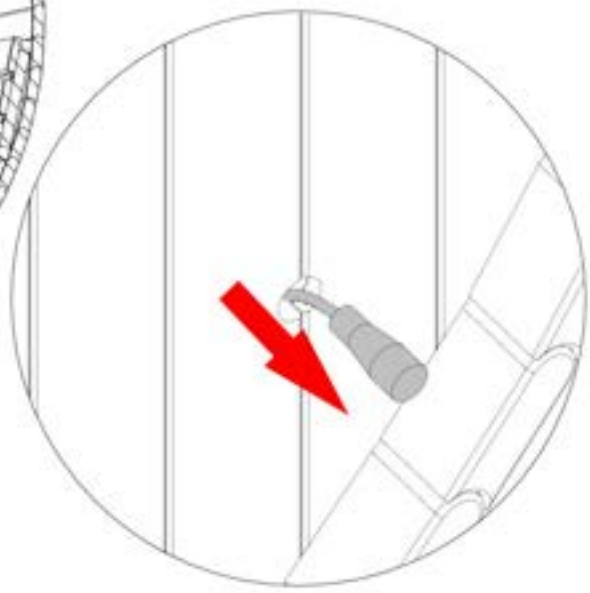

STEP 30 - CONTROL PANEL INSTALLATION

QTY	PART NUMBER	DESCRIPTION
3	H101440	SCREW TWH 8x1 SS-BLK



A4M07170 CONTROL BOX
(x1)



A6P01467 SILICONE GROMMET 25mm
(x1)

- REMOVE COVER PLATE FROM CONTROL PANEL BOX.
- CENTER CONTROL PANEL BOX ON BACK WALL APPROXIMATELY 18 7/8" ABOVE THE GROUND AS SHOWN.
- REATTACH COVER PLATE
- SLIDE GROMMET OVER WIRING INSTALLED IN PREVIOUS STEP AND INSERT INTO HOLE IN BACK WALL.

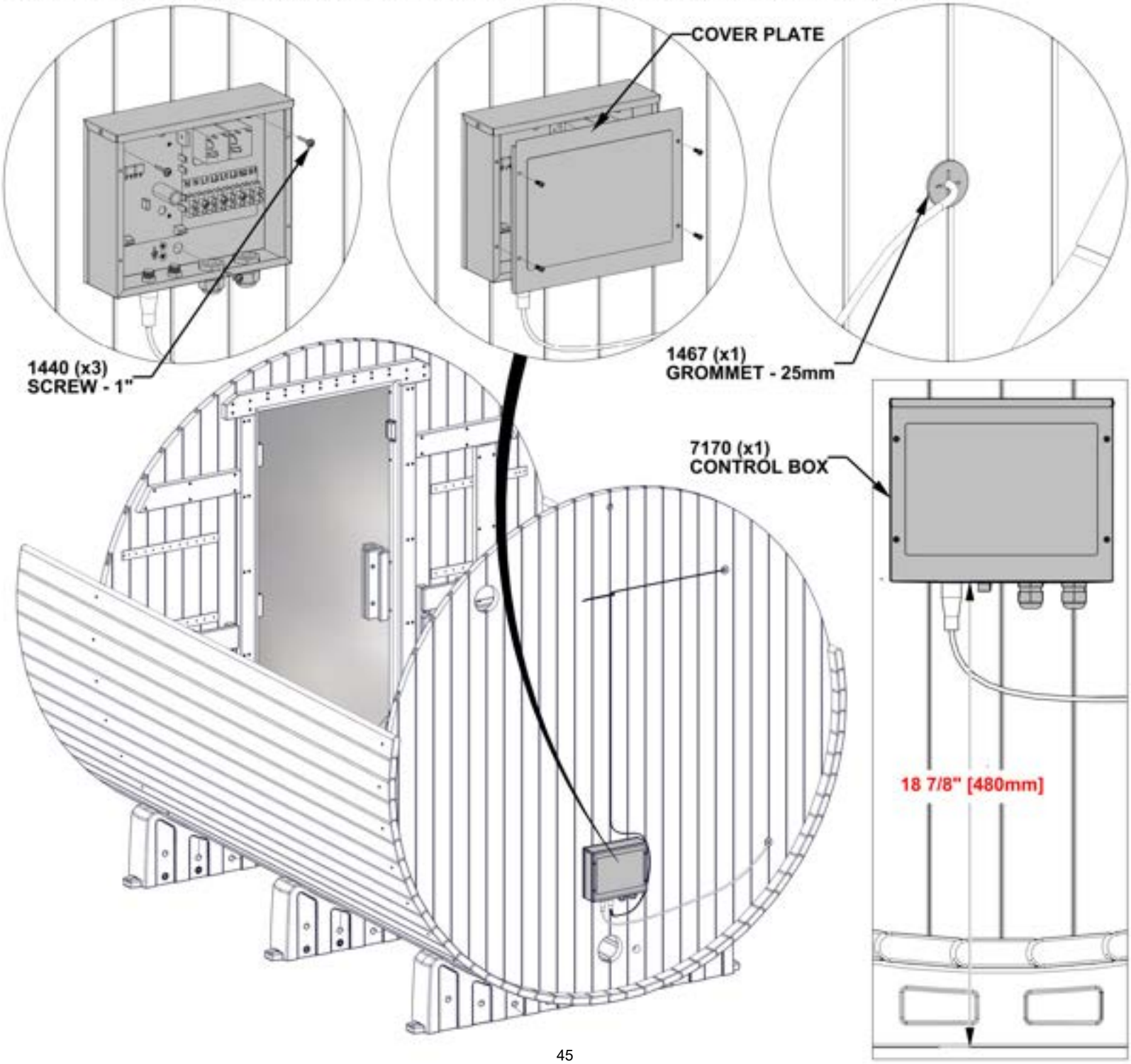

STEP 31 - CONTROL PANEL ASSEMBLY

QTY	PART NUMBER	DESCRIPTION
4	H101428	SCREW TFH 8X1 3/4 SS-BLK

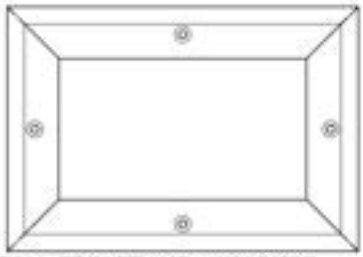

TF01 (x1) TRIM FRAME - W2A04797
7/8"x5 9/16"x8 1/16" (22x142x204)

- PLACE TRIM FRAME ON CONTROL PANEL ENSURING IT SEATS AROUND THE CONTROL PANEL AND ATTACH AS SHOWN.

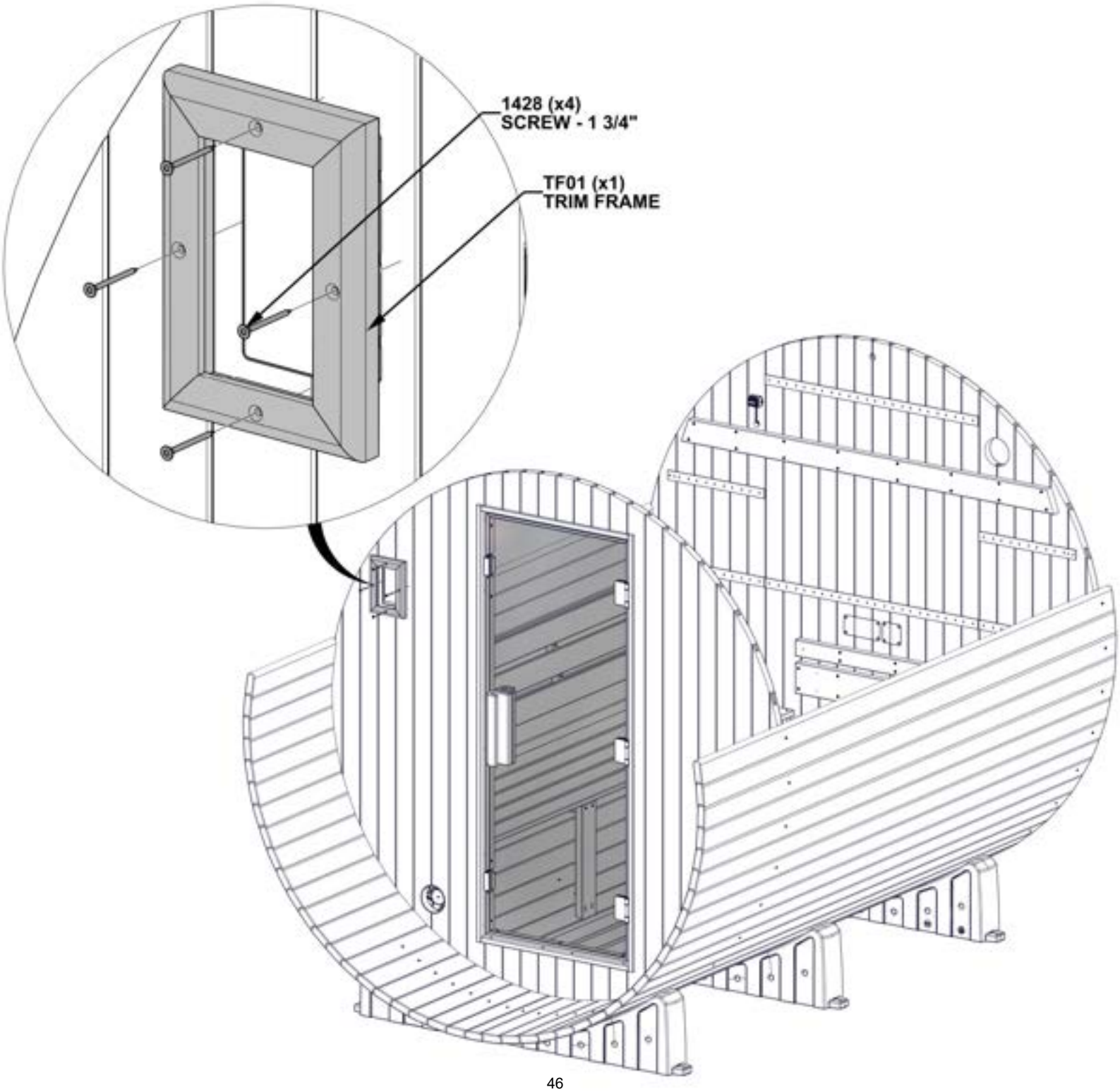

STEP 32 - VENT INSTALLATION

QTY	PART NUMBER	DESCRIPTION
3	H101426	SCREW TFH 8X1 1/4 SS-BLK



A4M05592 VENT ASSEMBLY
(x1)

- BEFORE ATTACHING VENT COVER, UNSCREW ADJUSTABLE VENT COVER FROM VENT BASE INSERT.
- ONCE VENT BASE INSERT IS ATTACHED, SCREW ADJUSTABLE VENT COVER BACK IN.

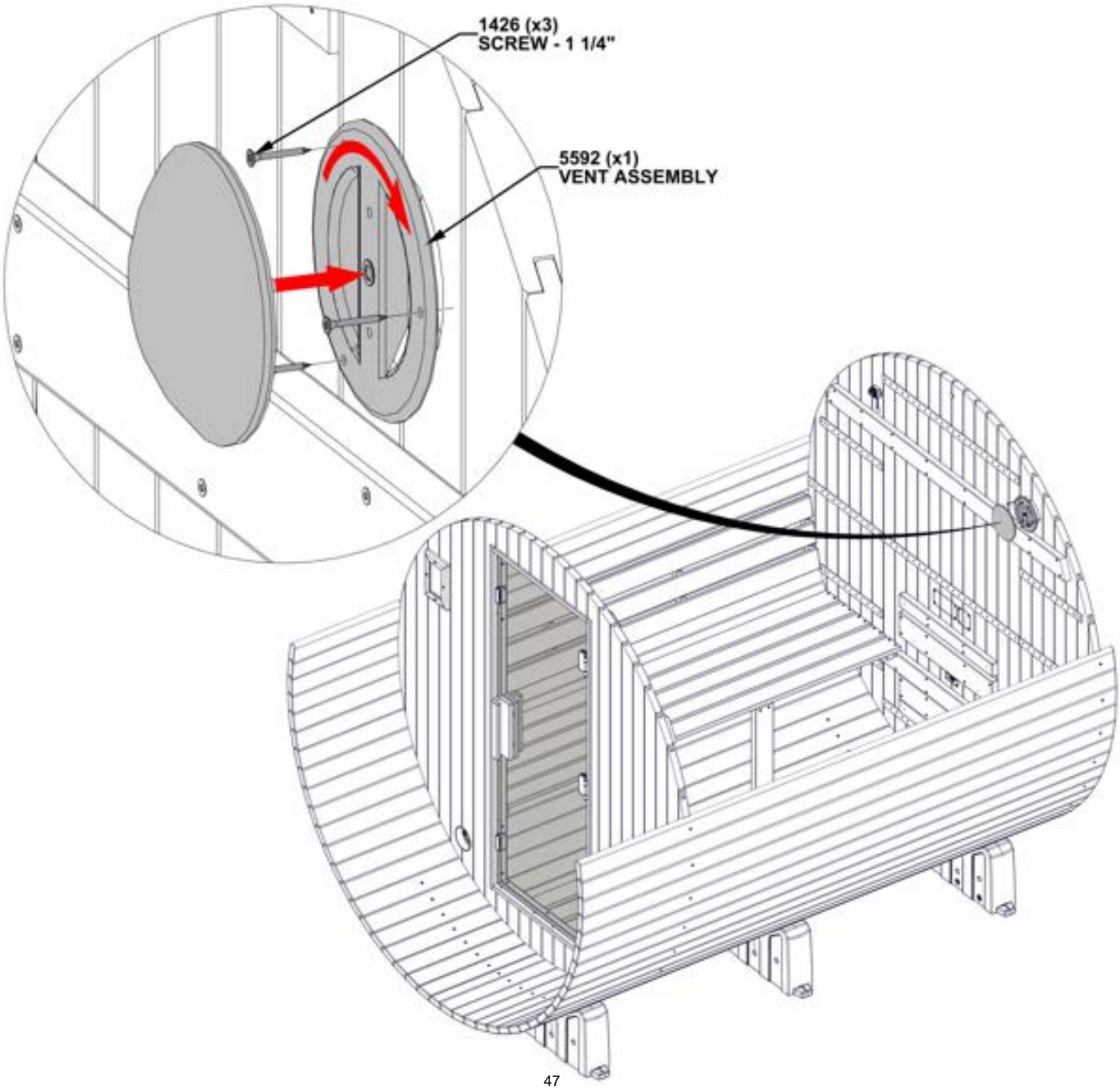

STEP 33 - VENT INSTALLATION

QTY	PART NUMBER	DESCRIPTION
6	H101438	SCREW TWH 8x3/4 SS-BLK

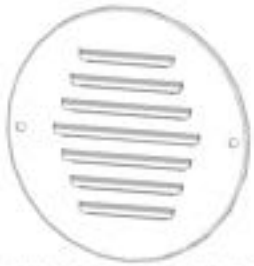

A4M05285 VENT COVER
(x2)



A4M07415 VENT COVER
(x1)

- INSERT 5285 VENT COVERS INTO BACK WALL PANEL HOLES AND ATTACH AS SHOWN.
- CENTER 7415 VENT COVER OVER FRONT WALL PANEL HOLE AND ATTACH AS SHOWN.

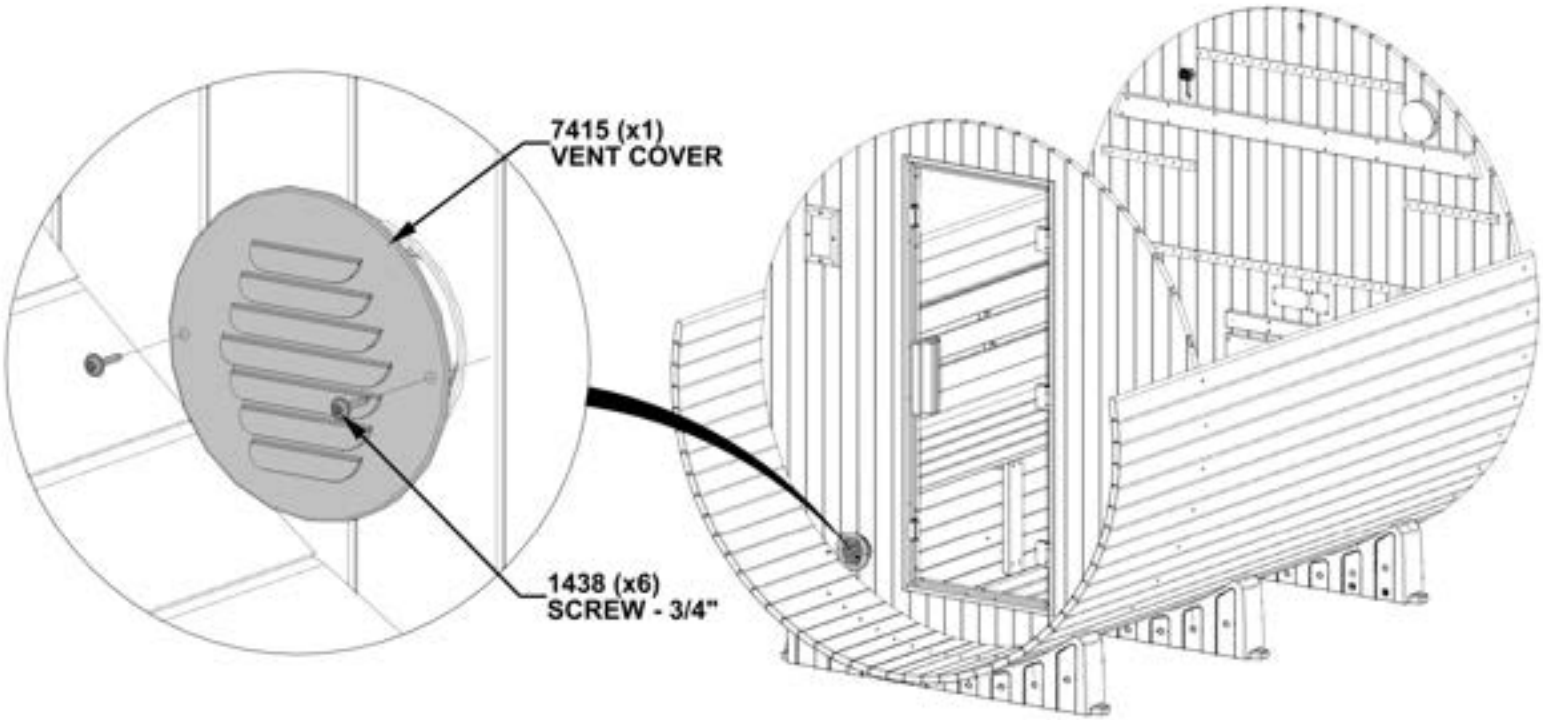

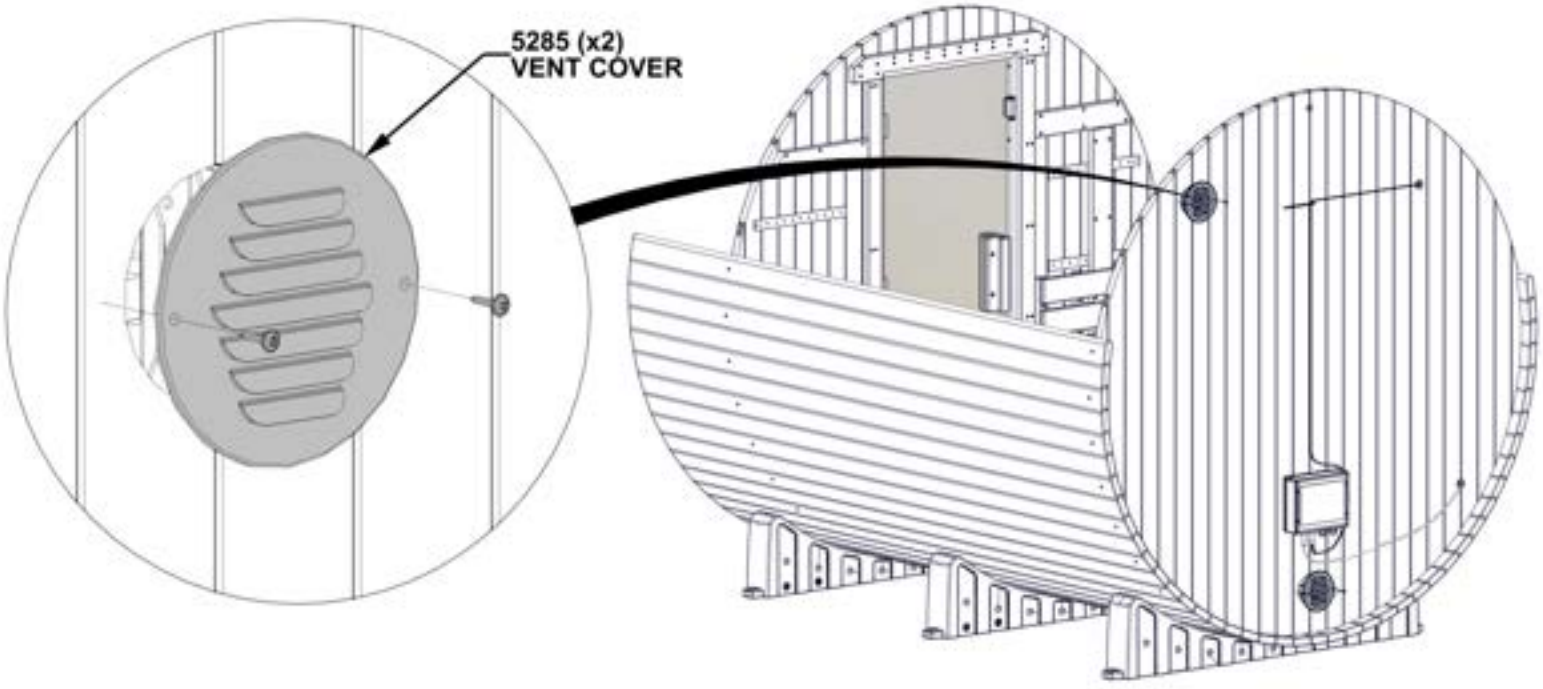

STEP 34 - SAUNA ASSEMBLY



OG01 PERIMETER BOARD - W4L21988
(x16) 1 3/16"x3 3/8"x99 15/16" (30x86x2538)



OG15 PERIMETER BOARD - W4L23468
(x16) 1 3/16"x3 3/8"x99 15/16" (30x86x2538)

- A ROPE OR STRAP IS SUGGESTED TO BE LOOSELY TIED/ATTACHED AROUND THE SAUNA TO HELP HOLD BOARDS IN PLACE.
- ALIGN GROOVE IN PERIMETER BOARDS WITH BOTH FRONT WALL AND BACK WALL ASSEMBLIES.
- WORKING UPWARDS, STACK PERIMETER BOARDS UP BOTH SIDES.
- FASTEN ONE OR TWO OF THE PERIMETER BOARDS TO THE WALLS WITH A SMALL NAIL TO HOLD IN PLACE.

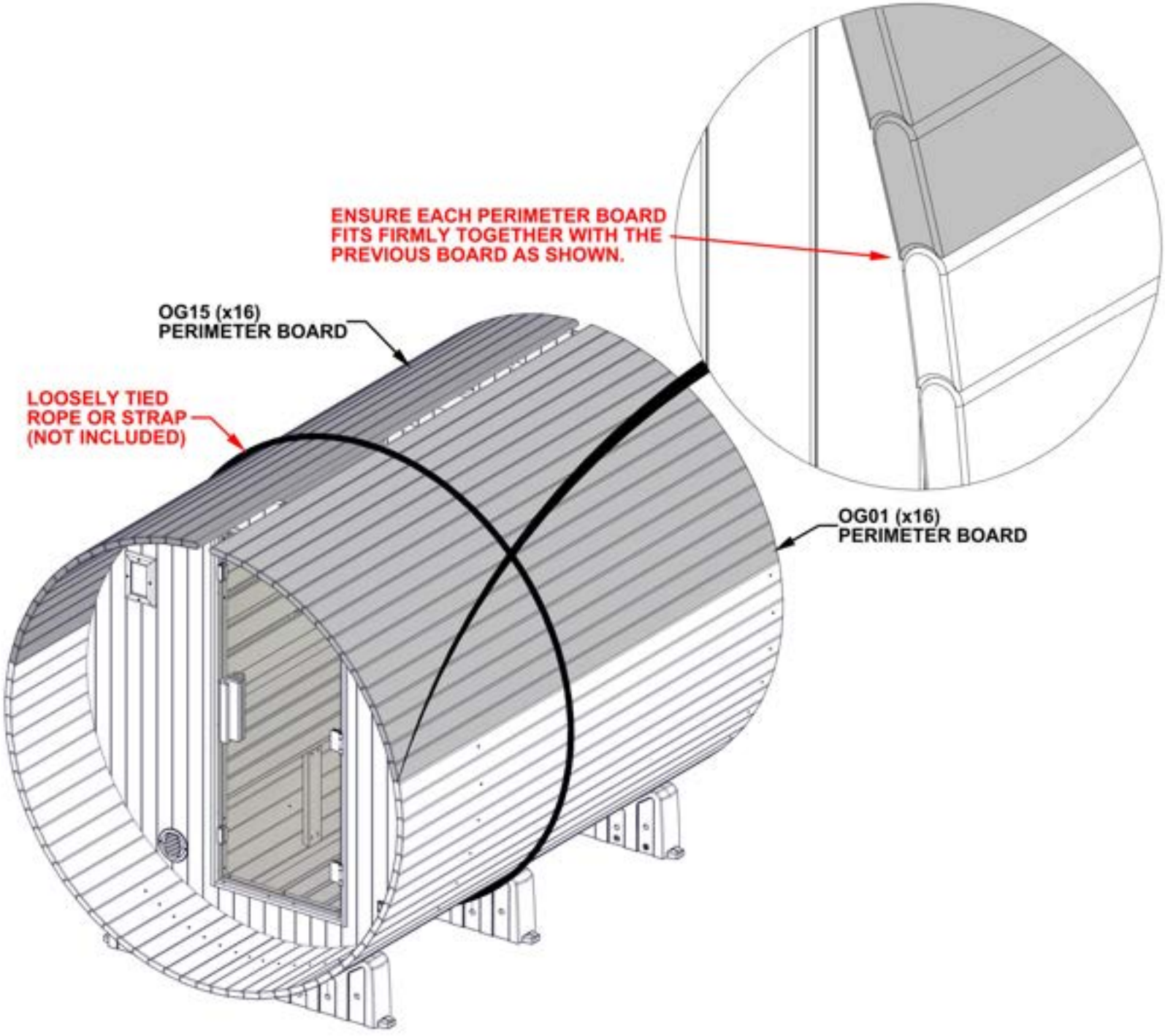

STEP 35 - SAUNA ASSEMBLY

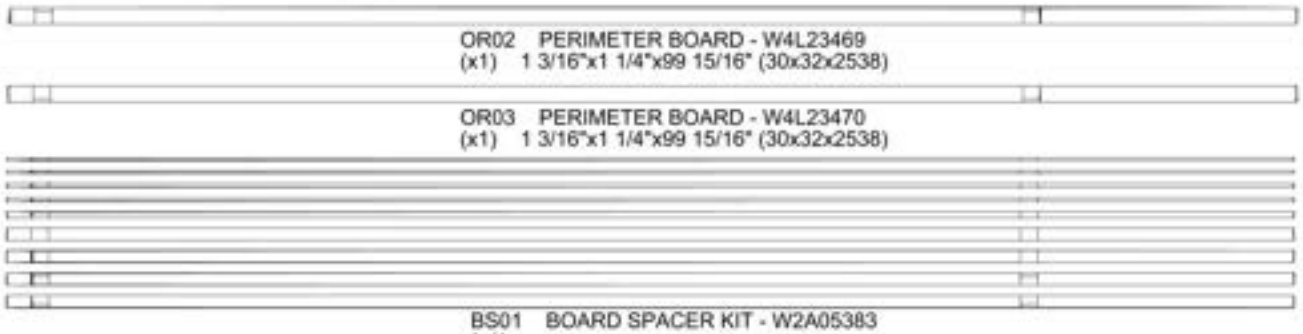

OR02 PERIMETER BOARD - W4L23469
(x1) 1 3/16"x1 1/4"x99 15/16" (30x32x2538)

OR03 PERIMETER BOARD - W4L23470
(x1) 1 3/16"x1 1/4"x99 15/16" (30x32x2538)

BS01 BOARD SPACER KIT - W2A05383
(x1)

- INSTALL OR02 AND OR03 AS SHOWN ENSURING THEY FIT FIRMLY TOGETHER WITH PREVIOUSLY INSTALLED BOARDS.
- IT IS CRITICAL THE BOARDS FIT TIGHTLY TOGETHER.
- USE THE BOARD SPACER KIT AS NEEDED TO ACHIEVE A TIGHT FIT.
- FILL ANY GAP LEFT BETWEEN OR02 AND OR03 WITH A PROPERLY SIZED SPACER BOARD FROM THE SPACER KIT.
- IF THE GAP IS NOT BIG ENOUGH TO FIT OR02 AND OR03, USE THE NARROWER PERIMETER BOARDS IN THE SPACER KIT.

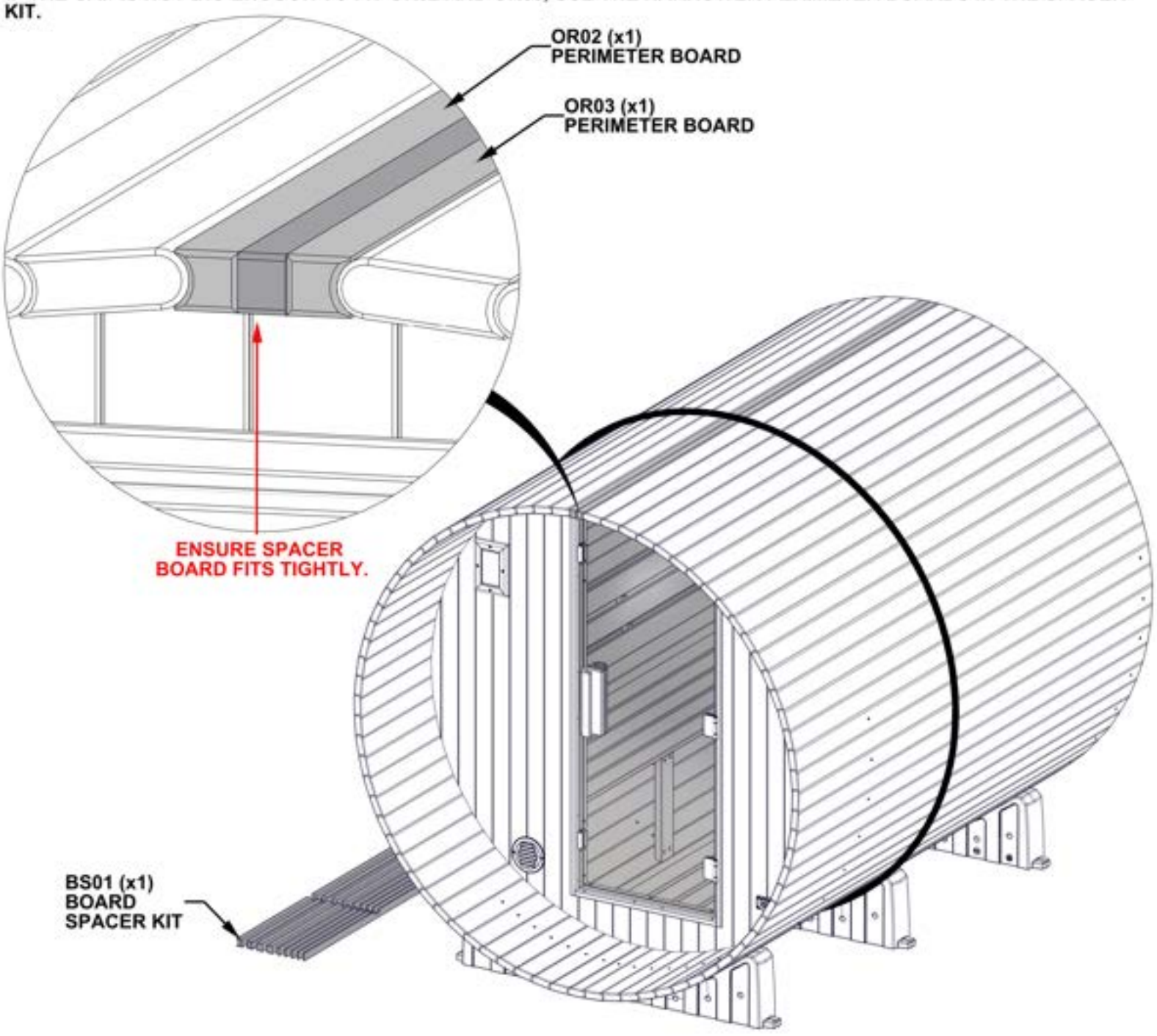

STEP 36 - BARREL ASSEMBLY



A4M05671 STRAPPING CINCH
(x4)



A4M05277 STRAPPING
(x4)

- WRAP STRAPPING AROUND SAUNA AS SHOWN.
- POSITION TWO STRAPS TO COVER THE SCREWS INSTALLED IN STEPS 11 AND 12.
- THE THIRD STRAP WILL BE LOCATED 2" [50mm] FROM THE FRONT EDGE OF THE SAUNA, AND THE FOURTH WILL BE LOCATED 54 3/4" [1390mm] FROM THAT STRAP AS SHOWN. OTHERWISE STRAPPING MAY INTERFERE WITH ROOF SHEET SCREWS.
- INSERT STRAPPING CINCH INSERTS INTO THE EYES ON STRAPPING.
- INSERT THE ALL THREAD THROUGH THE INSERTS AND CONNECT HARDWARE AS SHOWN.
- BEFORE TIGHTENING, VERIFY STRAPPING IS PROPERLY POSITIONED AND STRAIGHT.
- THE STRAPPING CINCHES CAN BE EITHER ALIGNED OR STAGGERED BASED ON PERSONAL PREFERENCE.
- TIGHTEN ALL NUTS EVENLY.
- REMOVE ROPE/STRAP IF USED FROM PREVIOUS STEP.

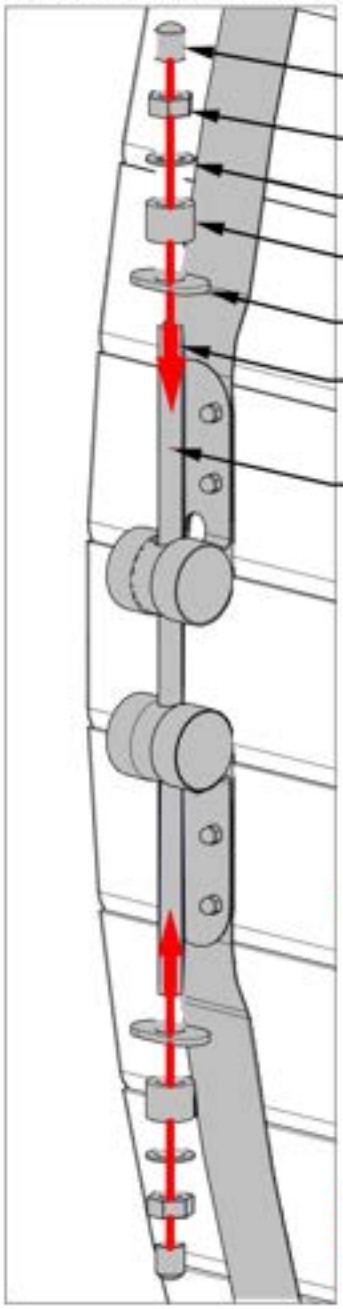

IMPORTANT: DO NOT OVERTIGHTEN

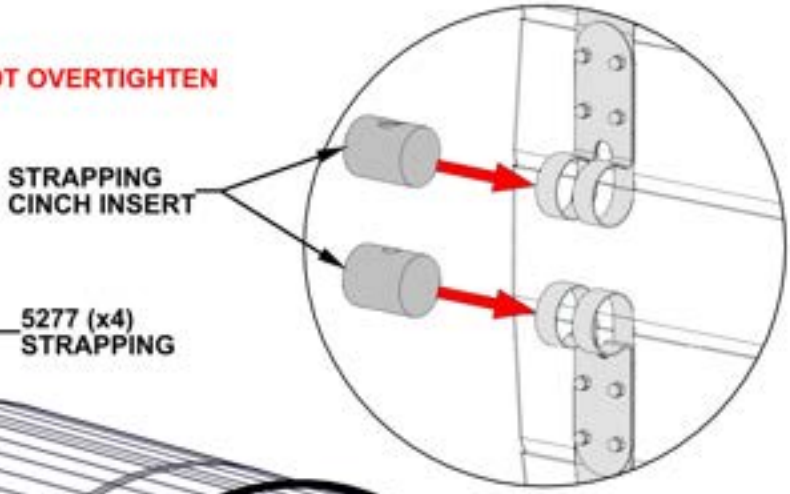

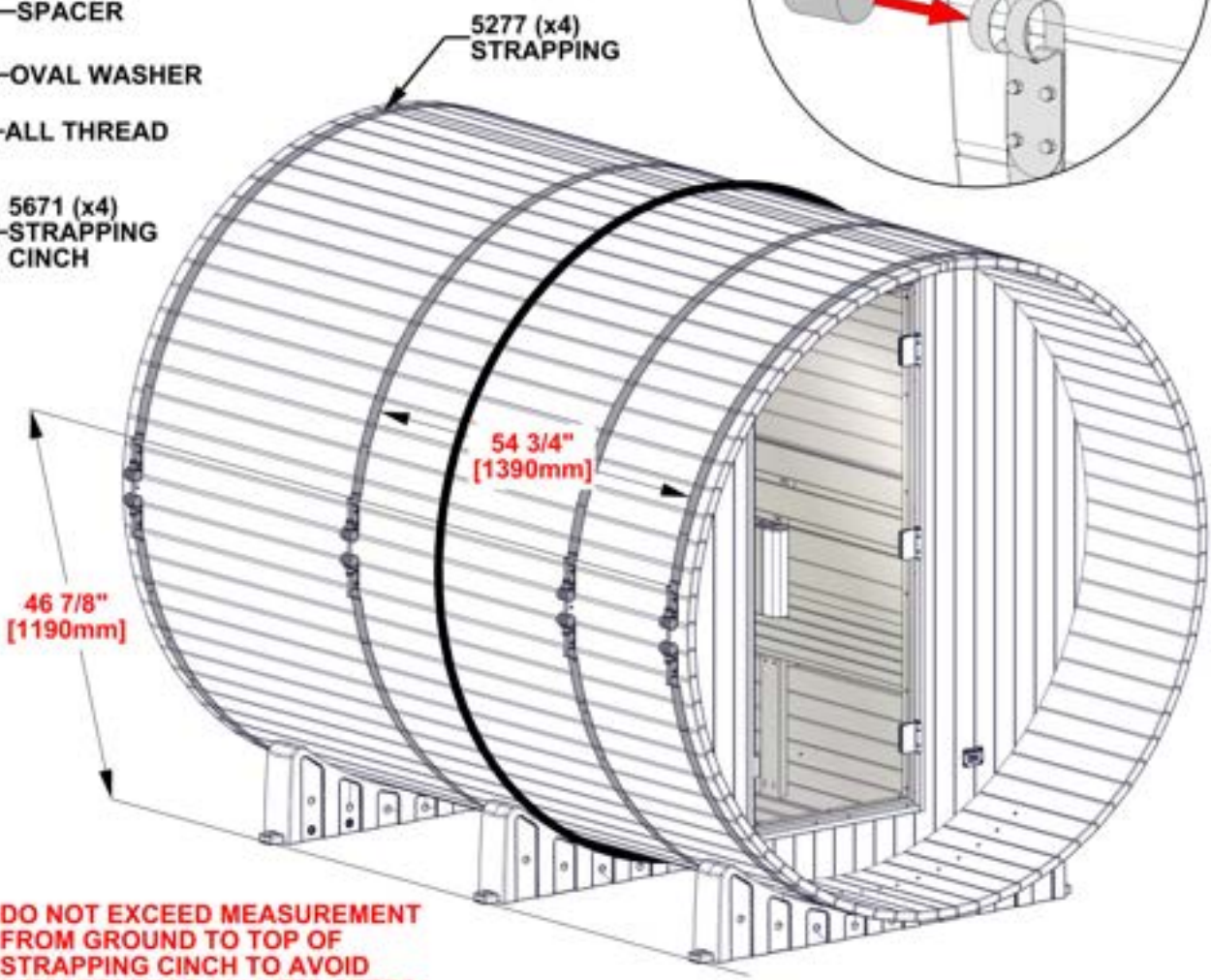

DO NOT EXCEED MEASUREMENT FROM GROUND TO TOP OF STRAPPING CINCH TO AVOID INTERFERENCE IN LATER STEPS.

STEP 37 - LIGHT ASSEMBLY

QTY	PART NUMBER	DESCRIPTION
2	H101437	SCREW TWH 8x5/8 SS-BLK



A6P01493-04 (x2) LIGHT CLIP

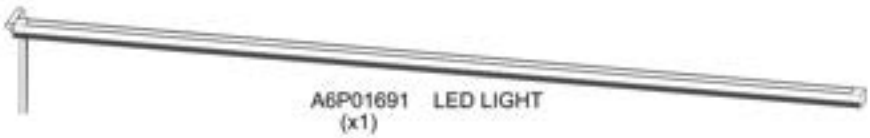

A6P01691 (x1) LED LIGHT



A6P01467 (x1) SILICONE GROMMET 25mm

- INSTALL GROMMET IN THE TOP OF THE BACK WALL PANEL ASSEMBLY AS SHOWN.
- INSTALL CLIPS ON THE TOP CENTER BOARD AS SHOWN USING APPROXIMATE DIMENSIONS. (DETAIL 'A')
- THREAD CORD THROUGH CUTOUT AND GROMMET. (DETAIL 'B')
- SNAP LED LIGHT INTO LIGHT CLIPS. (DETAIL 'C')

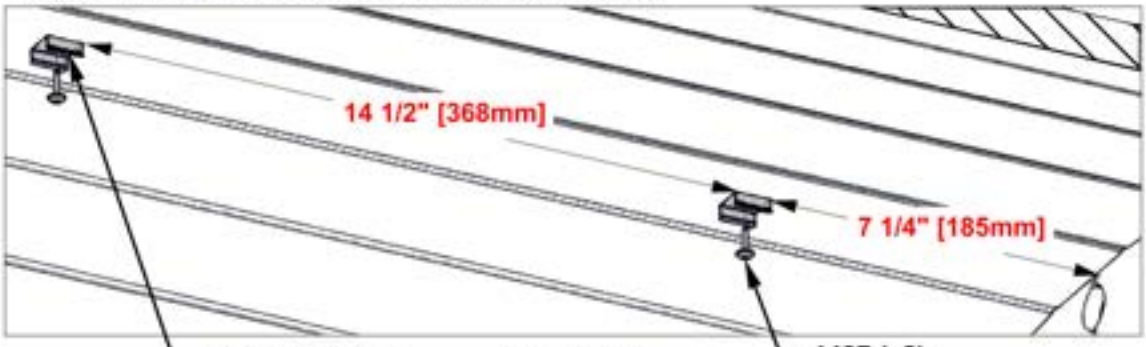

DETAIL 'A'

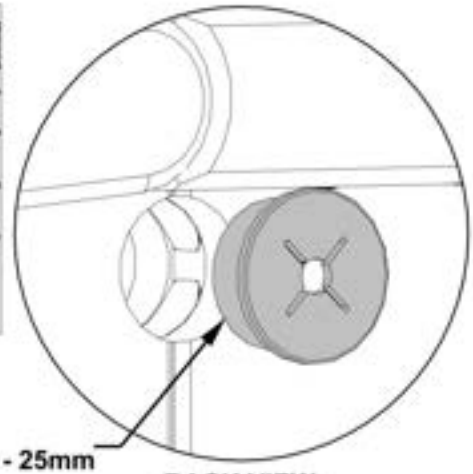

BACK VIEW

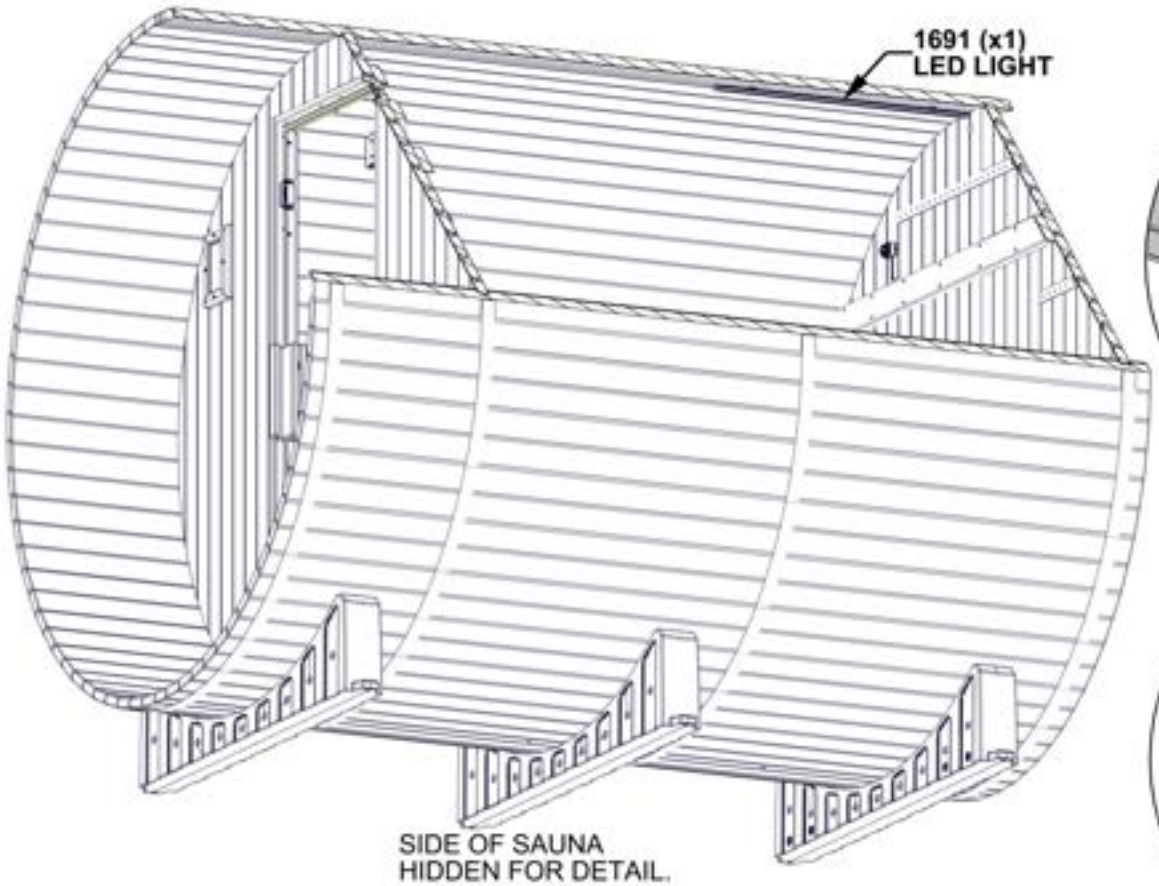

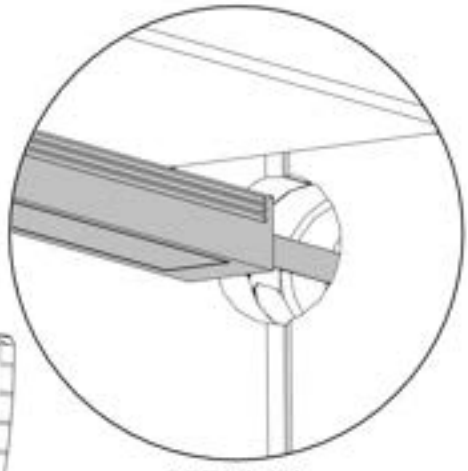

DETAIL 'B'

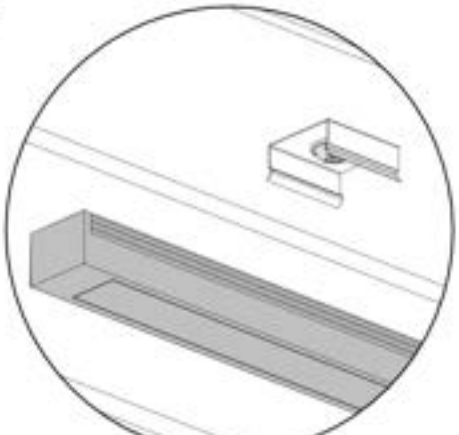

DETAIL 'C'

STEP 38 - WIRING

QTY	PART NUMBER	DESCRIPTION
5	H101409	SCREW PPH 4x1/2 BLK



A6P01712 LED LIGHT EXTENSION CABLE
(x1)



A6P01448 ZIP CABLE TIE
(x5)

- ATTACH LIGHT CORD TO 1712 AND PLUG INTO THE CONTROL BOX.
- USE ZIP CABLE TIES TO ORGANIZE ALL WIRING ON BACK OF SAUNA.

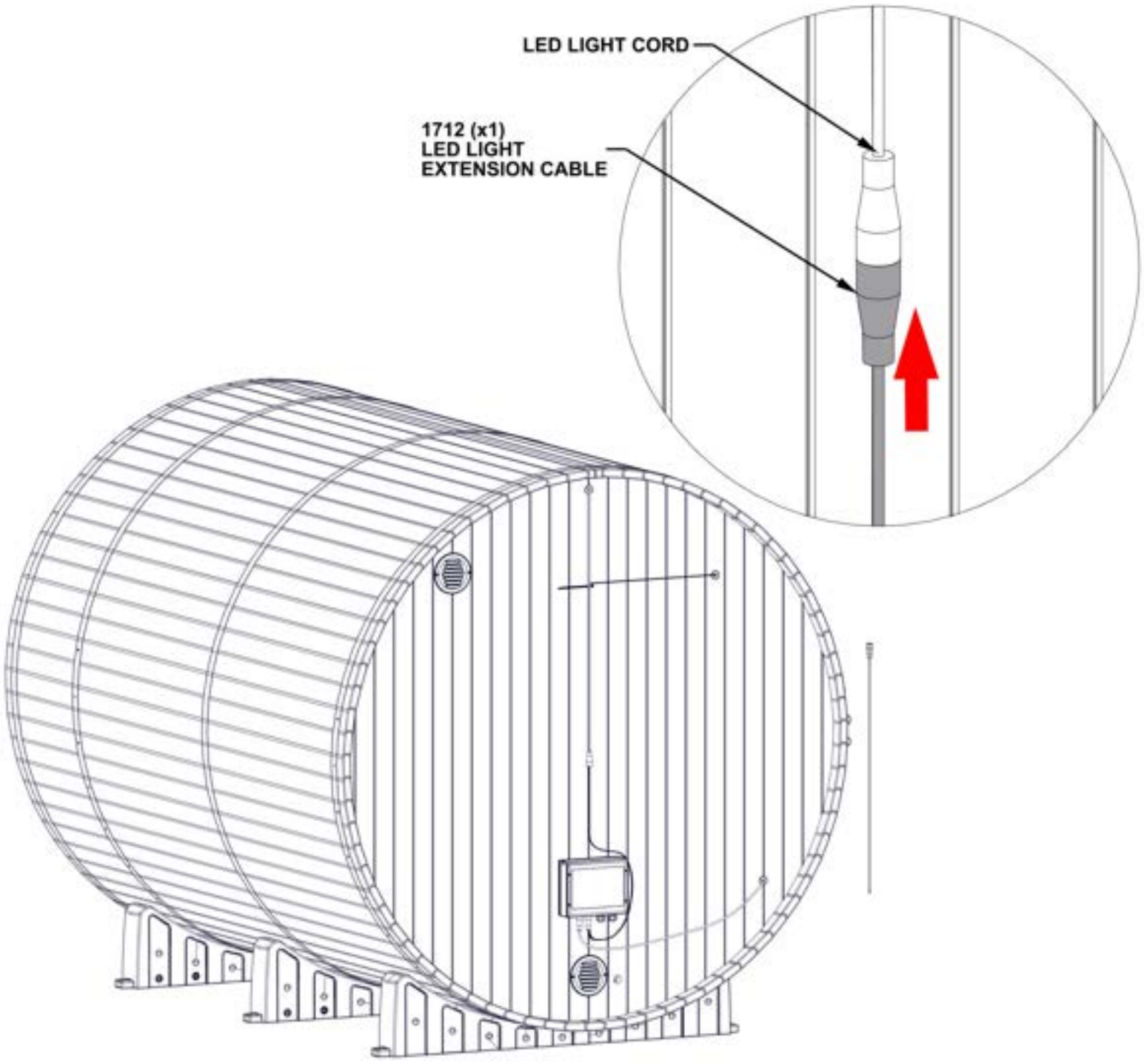

STEP 39 - TRIM ASSEMBLY

QTY	PART NUMBER	DESCRIPTION
30	H101429	SCREW TFH 8X2 SS-BLK



NR02 (x10) TRIM - W4L21866
13/16"x2 3/8"x10 15/16" (20x60x278)

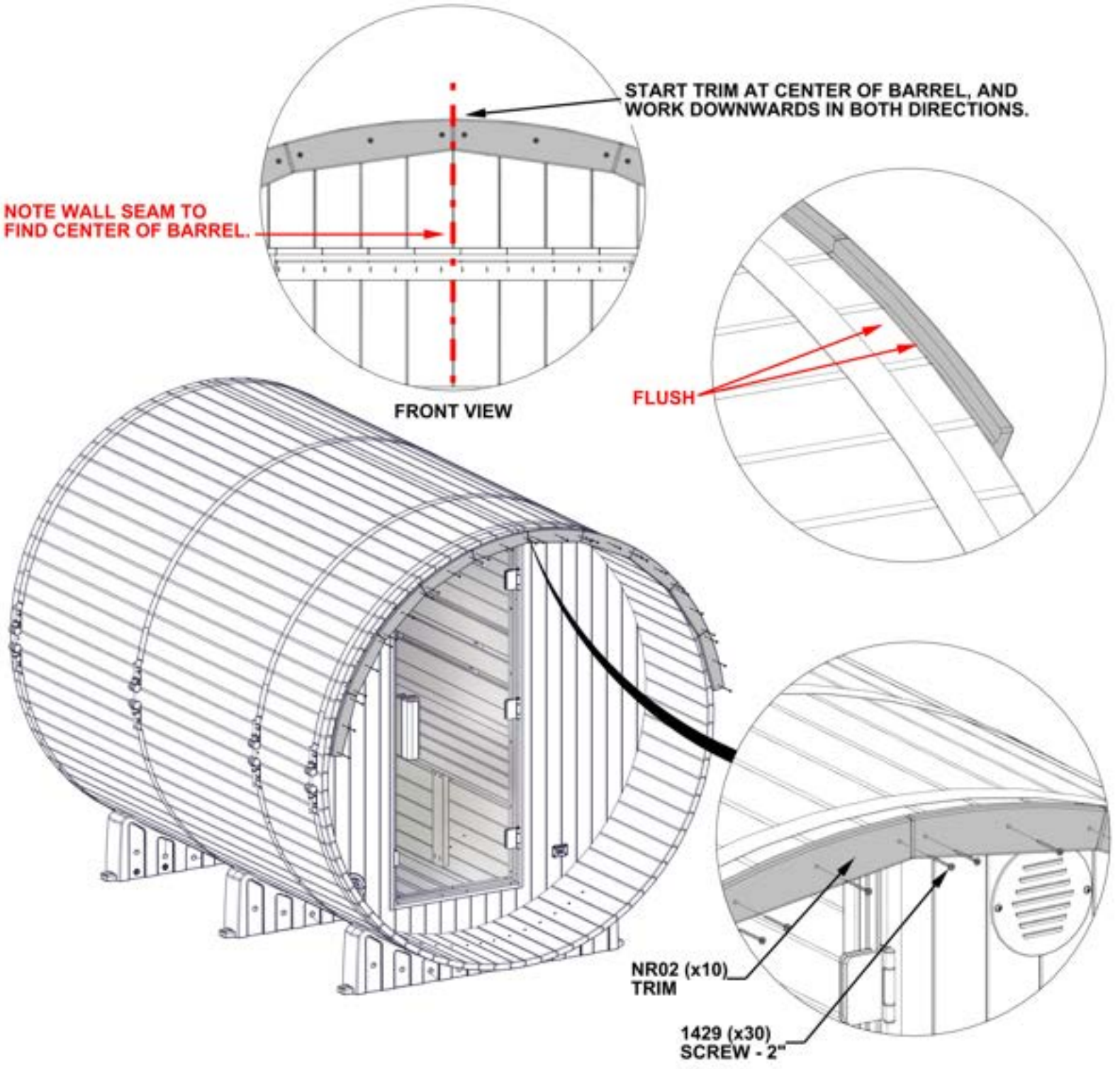

STEP 40 - ROOF ASSEMBLY

QTY	PART NUMBER	DESCRIPTION
48	H101480	SCREW SELF TAPPING #9x1 BLK



A4M05670 29GA SHEETING
(x6)

- WARNING: USE GLOVES WHEN HANDLING STEEL SHEETING.
- IMPORTANT: REMOVE BLUE FILM BEFORE INSTALLATION.
- INSTALL SHEETS STARTING WITH THE TOP RIGHT SHEET AS SHOWN.
- ENSURE THAT THE FIRST RIB IS CENTERED ON TOP OF THE SAUNA.
- CONTINUE INSTALLING SHEETS ON THE RIGHT SIDE OF SAUNA ENSURING CORRECT OVERLAP.
- AFTER RIGHT 3 SHEETS HAVE BEEN INSTALLED, INSTALL THE THREE LEFT SHEETS.
- IMPORTANT: EACH UPPER SHEET MUST OVERLAP THE LOWER SHEET. THIS IS CRITICAL TO AVOID LEAKING.

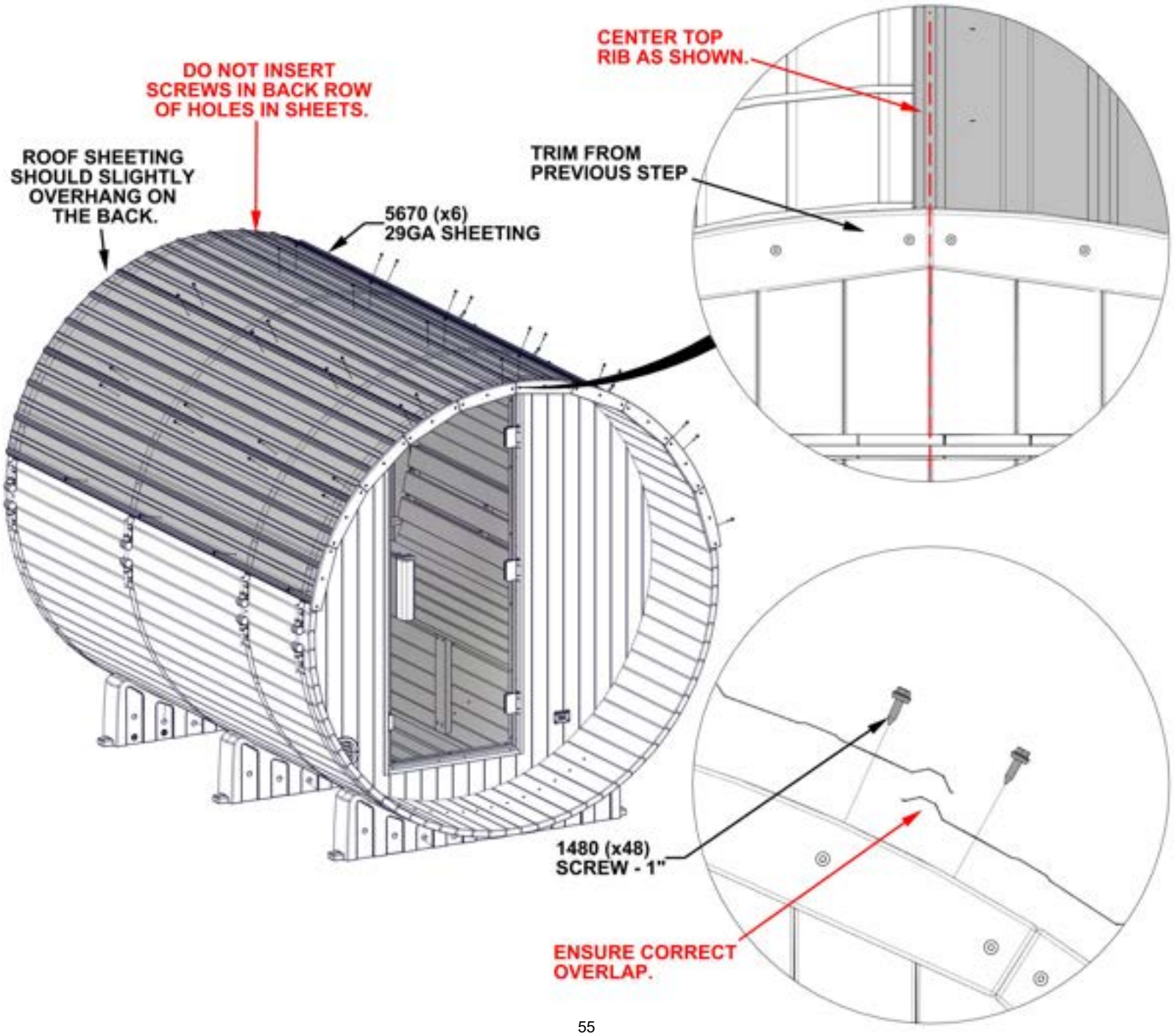

STEP 41 - DRIP EDGE ASSEMBLY

QTY	PART NUMBER	DESCRIPTION
12	H101480	SCREW SELF TAPPING #9x1 BLK



7398 DRIP EDGE - A4M07398
(x1) 1 9/16"x9 15/16"x49 1/4" (40x253x1251)



7399 DRIP EDGE - A4M07399
(x1) 1 9/16"x9 15/16"x49 1/4" (40x253x1251)



7400 DRIP EDGE SPLICE - A4M07400
(x1) 1 5/16"x1 9/16"x4 5/8" (33x40x118)

- **WARNING: USE GLOVES WHEN HANDLING STEEL SHEETING.**
- **ENSURE 7400 IS OVERLAPPED OVER 7398 AND 7399 TO SHED WATER PROPERLY.**
- **SLIDE DRIP EDGE UNDER ROOF SHEETS AND ATTACH AS SHOWN.**

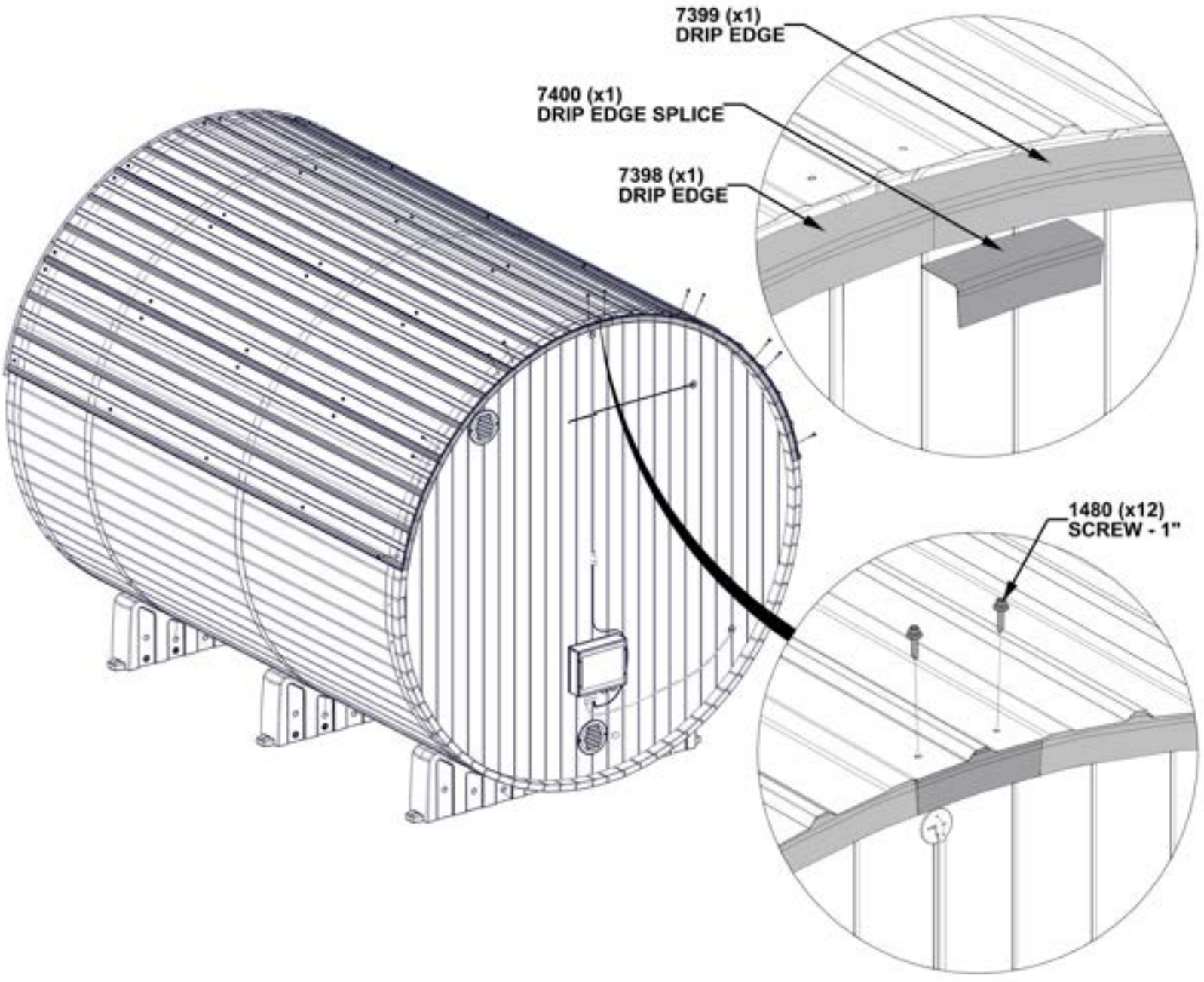

STEP 42 - HEATER GUARD ASSEMBLY

QTY	PART NUMBER	DESCRIPTION
20	H101428	SCREW TFH 8X1 3/4 SS-BLK



NR03 HEATER GUARD BOARD - W4L21874
(x5) 13/16"x2 3/8"x16 9/16" (20x60x420)



OO02 HEATER GUARD BOARD - W4L21875
(x1) 1 3/16"x1 3/16"x21 7/16" (30x30x544)



OO04 HEATER GUARD BOARD - W4L21871
(x1) 1 3/16"x1 3/16"x21 7/16" (30x30x544)

- ALIGN HOLES IN NR03 WITH PILOT HOLES IN OO02 AND OO04.

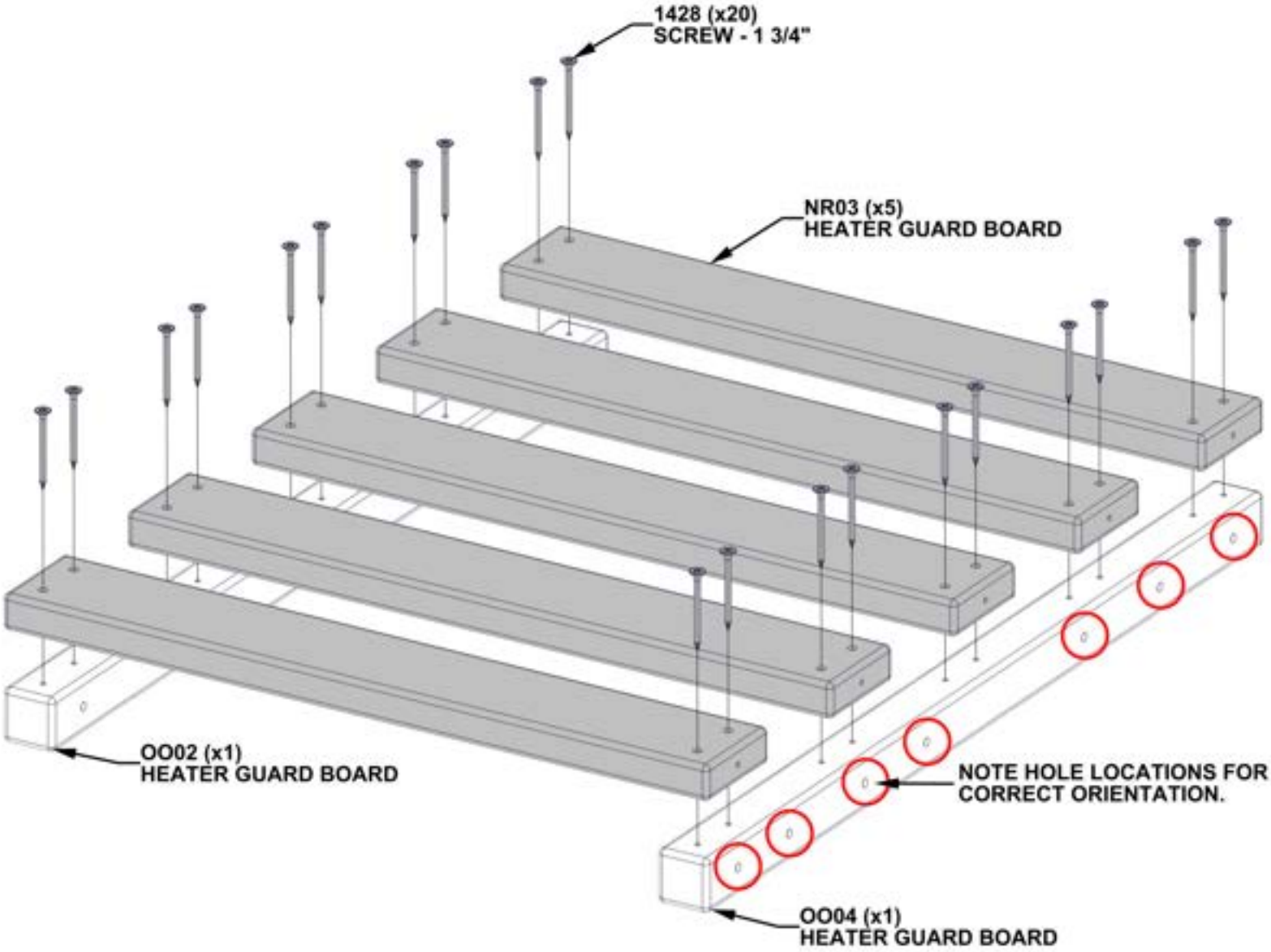

STEP 43 - HEATER GUARD ASSEMBLY

QTY	PART NUMBER	DESCRIPTION
20	H101428	SCREW TFH 8X1 3/4 SS-BLK



NR03 (x5) HEATER GUARD BOARD - W4L21874
13/16"x2 3/8"x16 9/16" (20x60x420)



OO02 (x1) HEATER GUARD BOARD - W4L21875
1 3/16"x1 3/16"x21 7/16" (30x30x544)

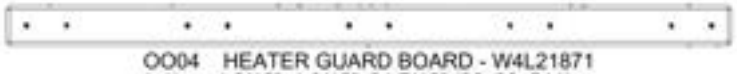

OO04 (x1) HEATER GUARD BOARD - W4L21871
1 3/16"x1 3/16"x21 7/16" (30x30x544)

- ALIGN HOLES IN NR03 WITH PILOT HOLES IN OO02 AND OO04.

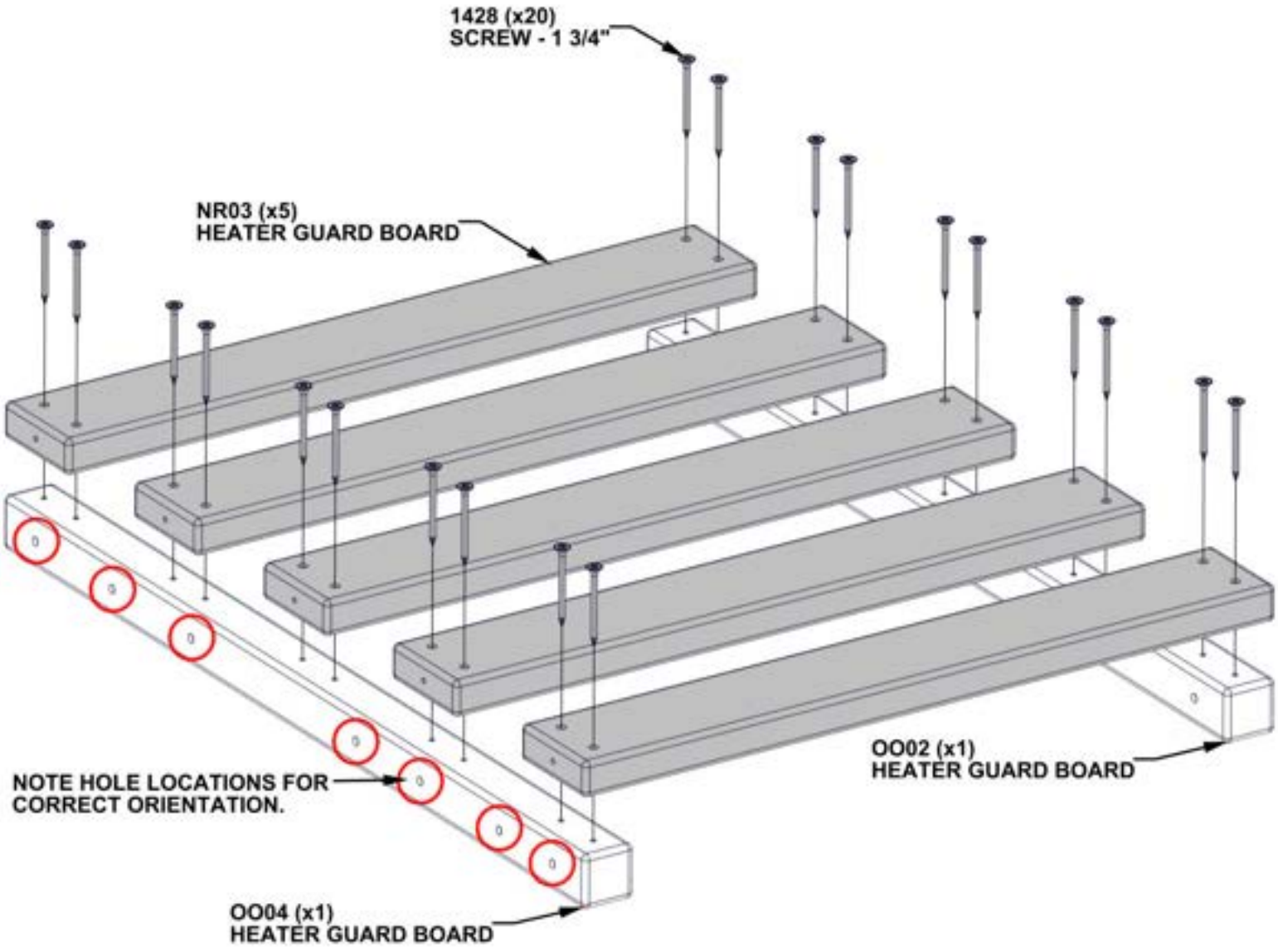

STEP 44 - HEATER GUARD ASSEMBLY

QTY	PART NUMBER	DESCRIPTION
20	H101428	SCREW TFH 8X1 3/4 SS-BLK



HEATER GUARD ASSEMBLY FROM STEP 42



HEATER GUARD ASSEMBLY FROM STEP 43



NR01 (x5) HEATER GUARD BOARD - W4L21872
13/16"x2 3/8"x23 15/16" (20x60x608)

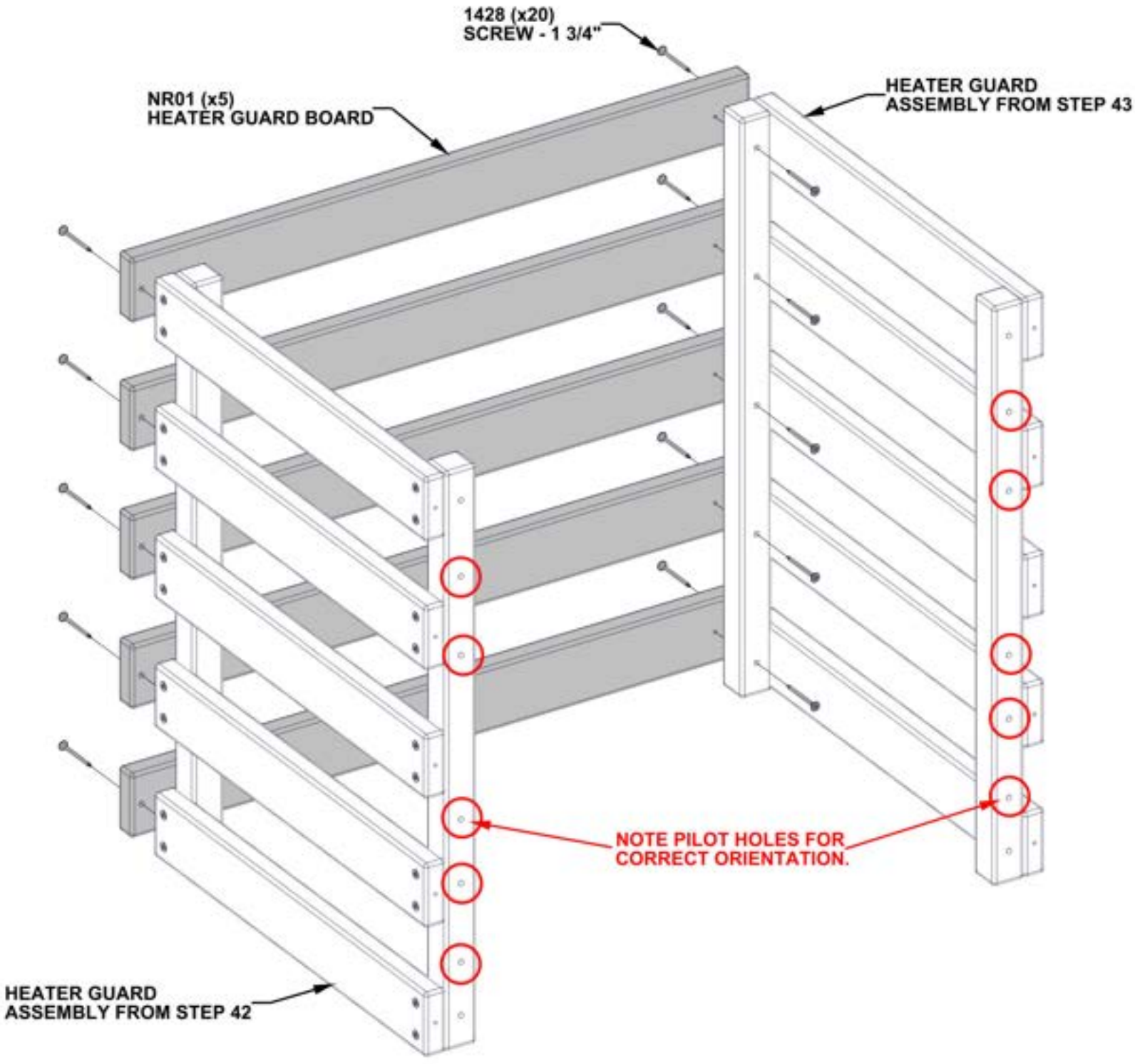

STEP 45 - HEATER GUARD ASSEMBLY

QTY	PART NUMBER	DESCRIPTION
14	H101434	SCREW TFH 8X3 1/4 SS-BLK

- POSITION HEATER GUARD ASSEMBLY AS SHOWN.
- ALIGN TOP AND BOTTOM THROUGH HOLES WITH THROUGH HOLES IN PREVIOUSLY INSTALLED GUARD MOUNTING BOARDS AND ATTACH.
- ENSURE SIDES OF THE HEATER GUARD ASSEMBLY ARE FLUSH WITH THE ENDS OF THE PREVIOUSLY INSTALLED HEATER SPACER BOARDS.

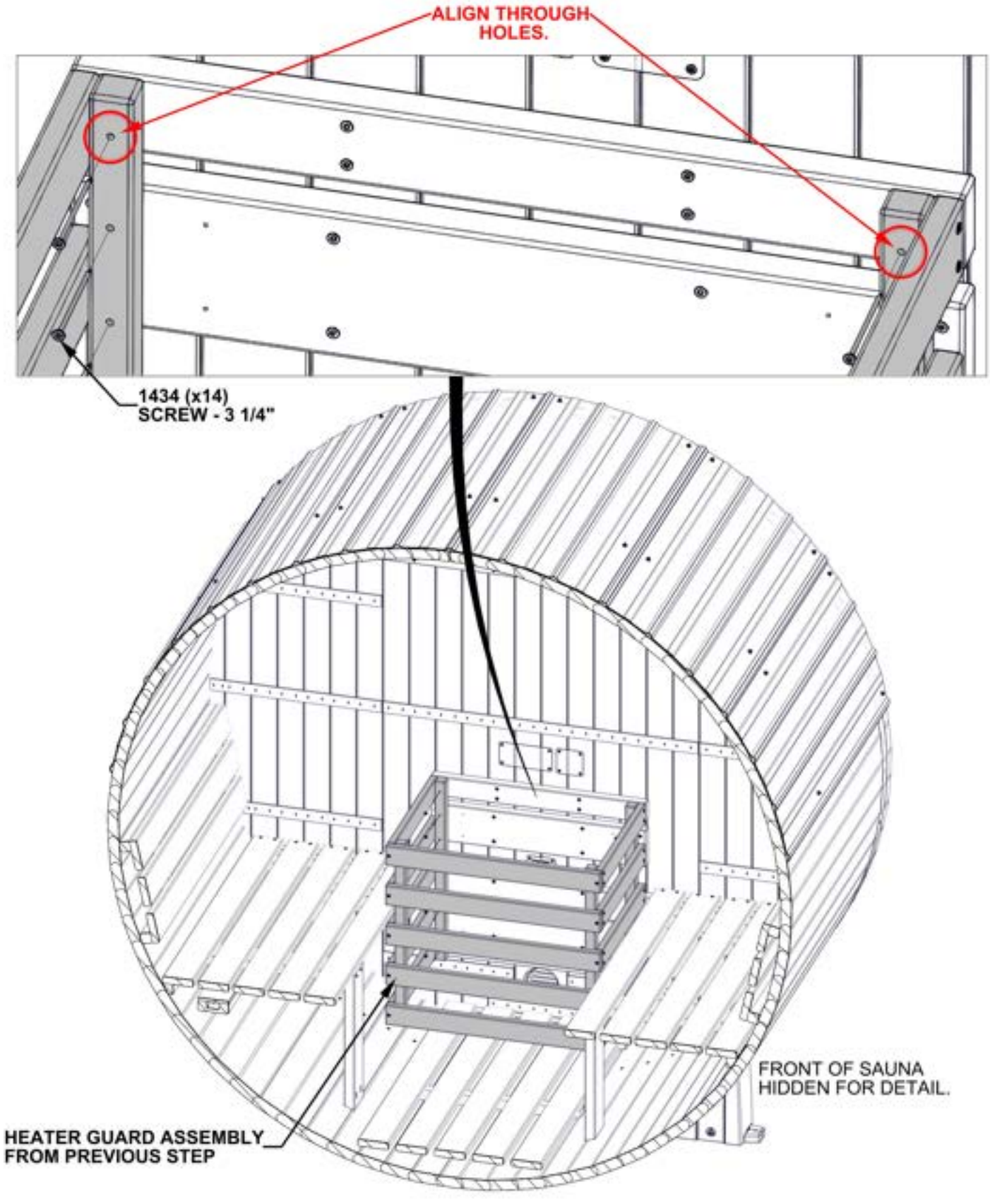

STEP 46 - HEATER MOUNT INSTALLATION

QTY	PART NUMBER	DESCRIPTION
8	H101468	SCREW RAISED HEAD 8x1 BLK

- INSERT SCREWS INTO PILOT HOLES IN HEATER GUARD SPACER BOARDS.

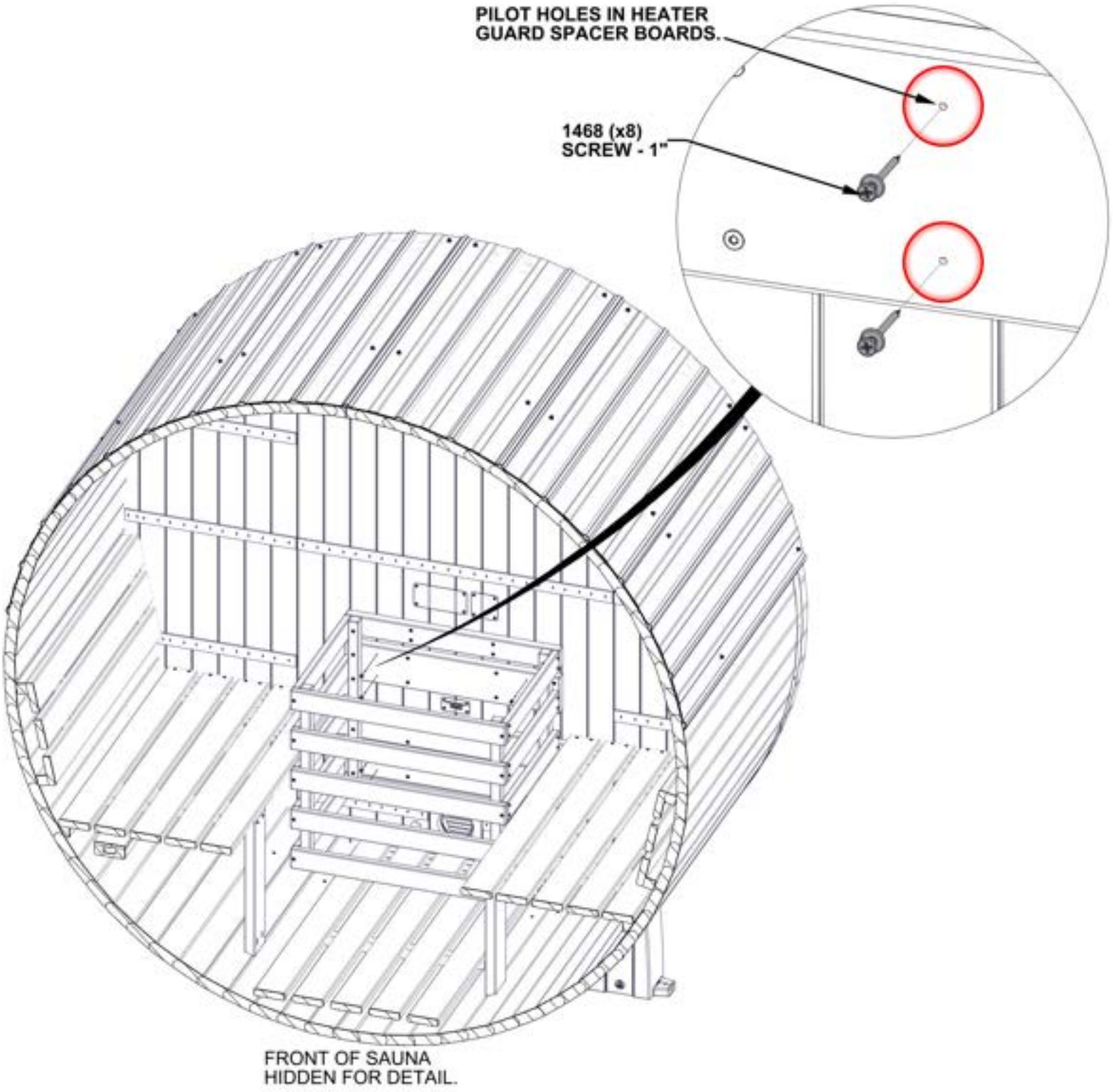

STEP 47 - BENCH ASSEMBLY

QTY	PART NUMBER	DESCRIPTION
12	H101429	SCREW TFH 8X2 SS-BLK



OG09 (x2) WALL CLEAT - W4L21909
1 3/16"x3 3/8"x18 7/8" (30x86x480)

- USING DIMENSIONS SHOWN, ATTACH AS SHOWN.
- ENSURE MEASUREMENTS ARE TAKEN FROM THE OUTSIDE AND BOTTOM OF DOOR TRIM AS SHOWN.

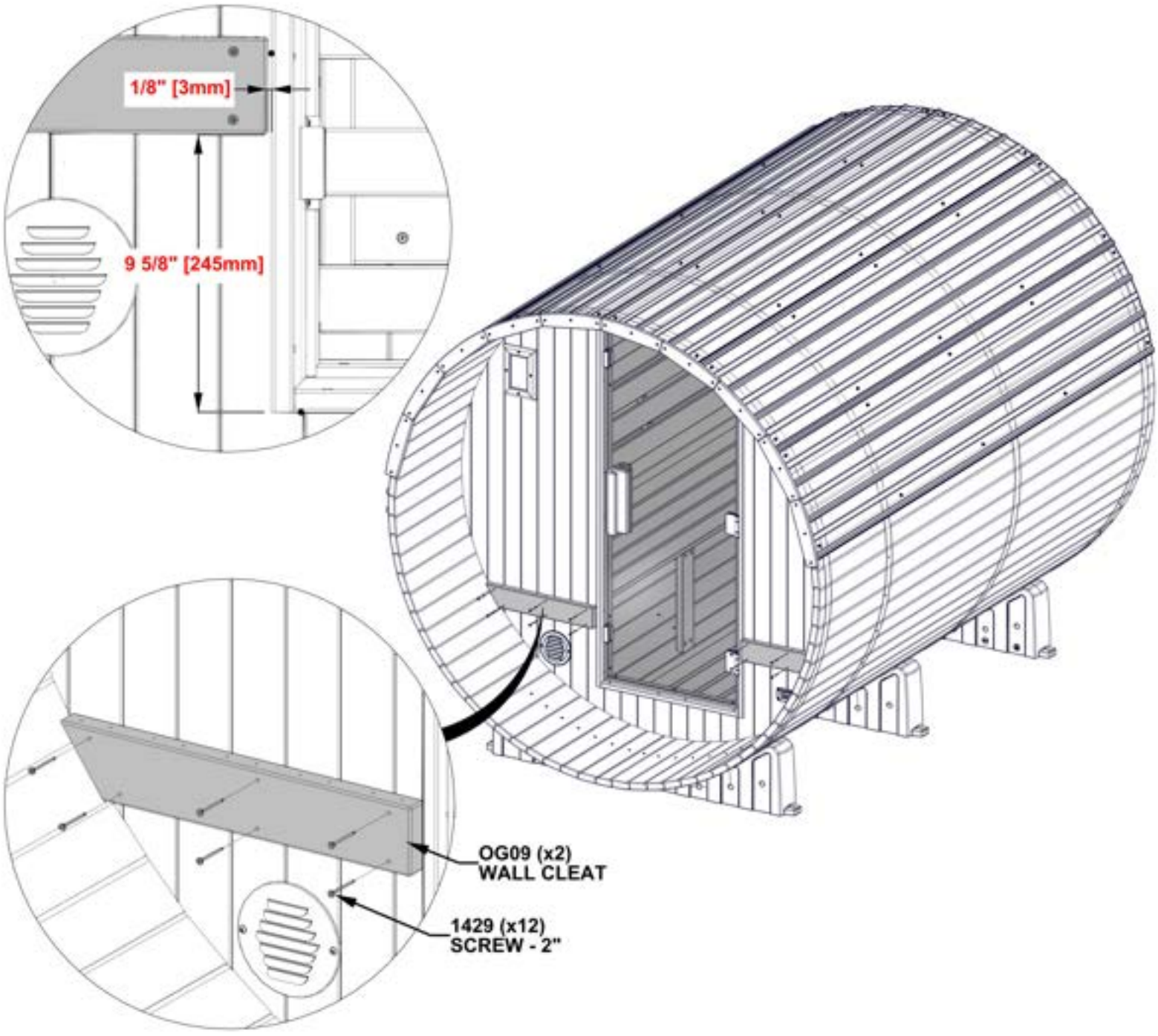

STEP 48 - BENCH ASSEMBLY

QTY	PART NUMBER	DESCRIPTION
3	H101429	SCREW TFH 8X2 SS-BLK
2	H101431	SCREW TFH 8X2 1/2 SS-BLK
2	H101443	SCREW TWH 8x1 1/2 SS-BLK



BA04 (x1) OUTSIDE BENCH ASSEMBLY - W2A04808
1 15/16"x19 3/16"x19 3/4" (50x487x502)



OG04 (x1) BENCH BRACE - W4L21860
1 3/16"x3 3/8"x16 3/8" (30x86x416)

1) INSTALL BENCH BRACE OG04 TO BENCH ASSEMBLY. (DETAIL 'A')
2) PUSH THE BENCH WITH BENCH BRACE BOARD AGAINST THE WALL UNTIL IT MAKES CONTACT WITH THE SIDEWALL.
3) CHECK THE ALIGNMENT OF THE HOLES AT THE END OF THE BENCH WITH THE PILOT HOLES ON THE CLEAT MOUNTED TO THE WALL. (DETAIL 'B')
4) ENSURE BENCH BRACE IS SQUARE WITH BENCH AND INSTALL (2) 1443 SCREWS. (DETAIL 'C')
5) LEVEL THE BENCH BOTH FRONT-TO-BACK AND SIDE-TO-SIDE; THEN ATTACH TO SIDEWALL AS SHOWN. (DETAIL 'D')

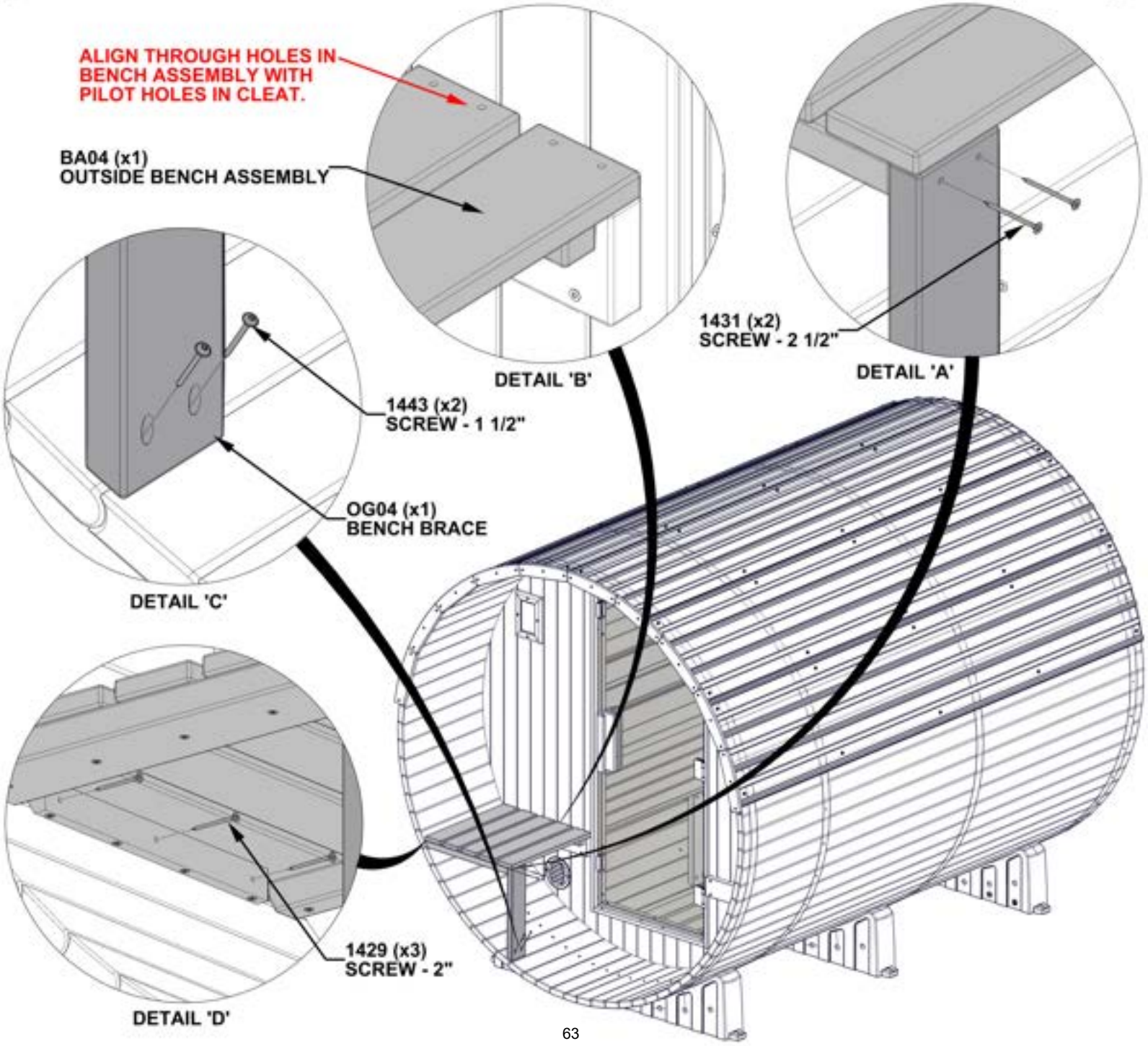

STEP 49 - BENCH ASSEMBLY

QTY	PART NUMBER	DESCRIPTION
3	H101429	SCREW TFH 8X2 SS-BLK
2	H101431	SCREW TFH 8X2 1/2 SS-BLK
2	H101443	SCREW TWH 8x1 1/2 SS-BLK

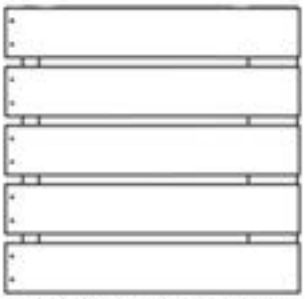

BA03 (x1) OUTSIDE BENCH ASSEMBLY - W2A04806
1 15/16"x19 1/8"x19 3/4" (50x486x502)



OG04 (x1) BENCH BRACE - W4L21860
1 3/16"x3 3/8"x16 3/8" (30x86x416)

1) INSTALL BENCH BRACE OG04 TO BENCH ASSEMBLY. (DETAIL 'A')
2) PUSH THE BENCH WITH BENCH BRACE BOARD AGAINST THE WALL UNTIL IT MAKES CONTACT WITH THE SIDEWALL.
3) CHECK THE ALIGNMENT OF THE HOLES AT THE END OF THE BENCH WITH THE PILOT HOLES ON THE CLEAT MOUNTED TO THE WALL. (DETAIL 'B')
4) ENSURE BENCH BRACE IS SQUARE WITH BENCH AND INSTALL (2) 1443 SCREWS. (DETAIL 'C')
5) LEVEL THE BENCH BOTH FRONT-TO-BACK AND SIDE-TO-SIDE; THEN ATTACH TO SIDEWALL AS SHOWN. (DETAIL 'D')

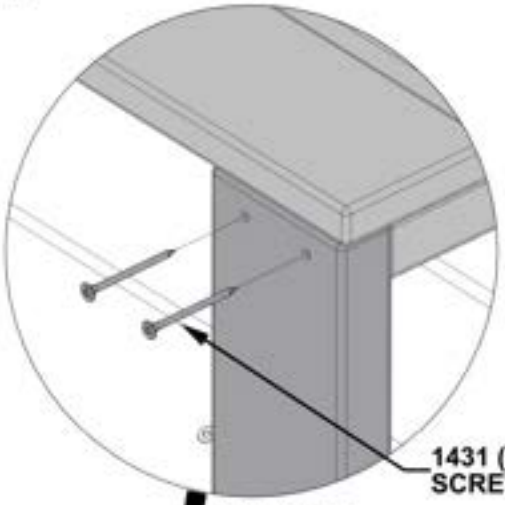

DETAIL 'A'

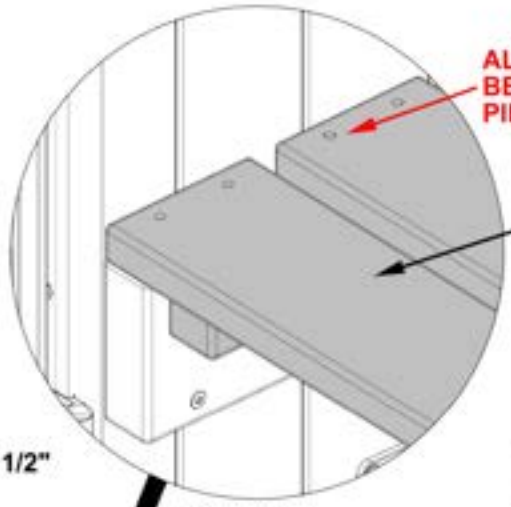

DETAIL 'B'

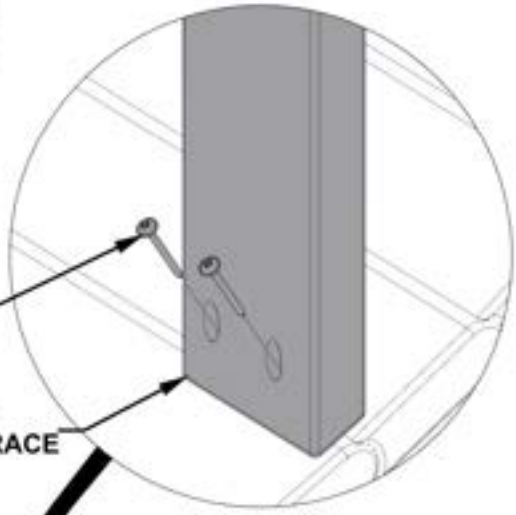

DETAIL 'C'

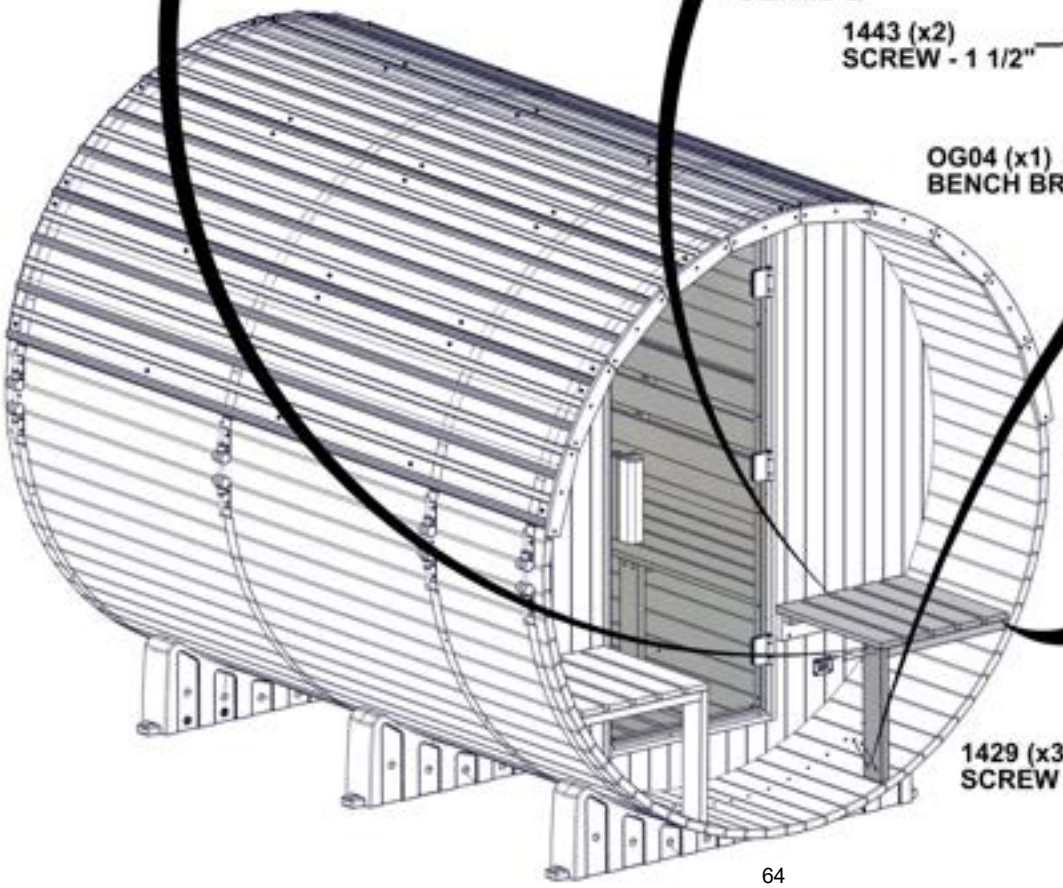

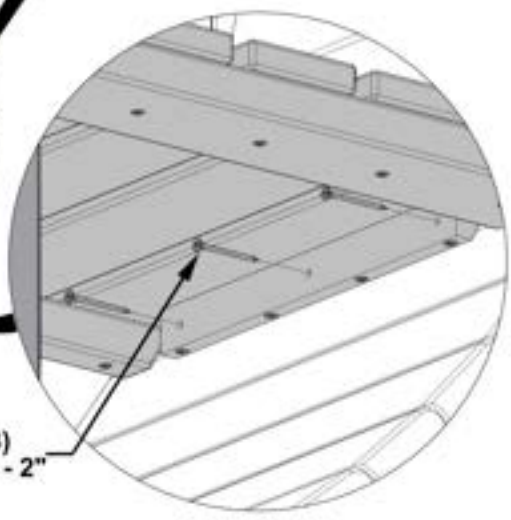

DETAIL 'D'

STEP 50 - BENCH ASSEMBLY

QTY	PART NUMBER	DESCRIPTION
20	H101428	SCREW TFH 8X1 3/4 SS-BLK

- ENSURE THROUGH HOLES ARE ALIGNED WITH PILOT HOLES AND ATTACH WITH SCREWS.

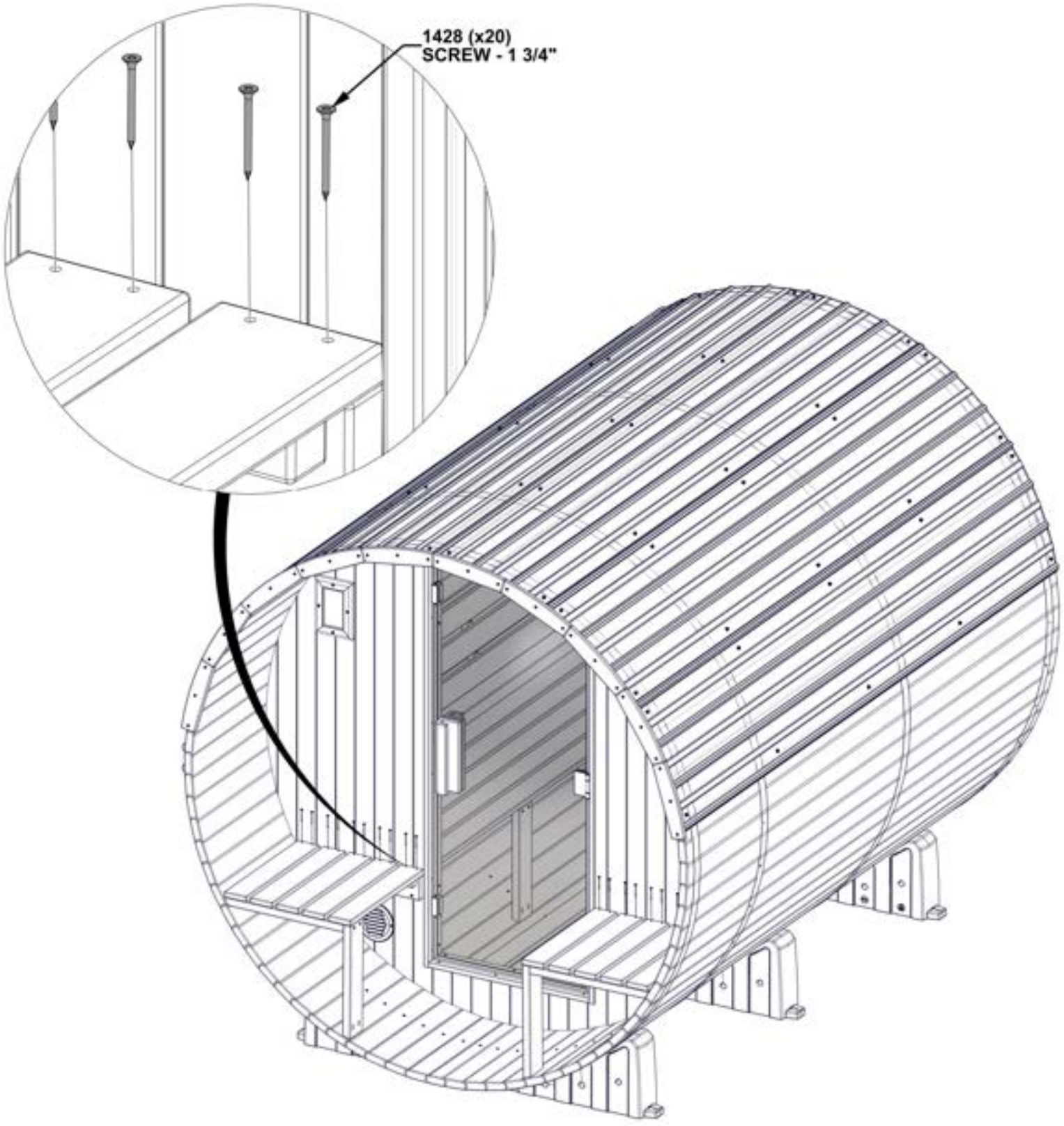

STEP 51 - BENCH ASSEMBLY

QTY	PART NUMBER	DESCRIPTION
12	H101430	SCREW TFH 8X2 1/4 SS-BLK

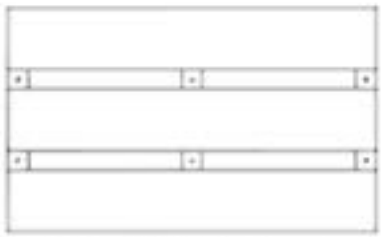

BR03 (x2) BENCH BACK REST - W2A04807
1 15/16"x12 1/16"x19 3/4" (50x306x502)

- CENTER BACK REST AND ATTACH AS SHOWN.
- USE DIMENSIONS SHOWN AS A GENERAL GUIDE AND ADJUST TO YOUR OWN PREFERENCE.

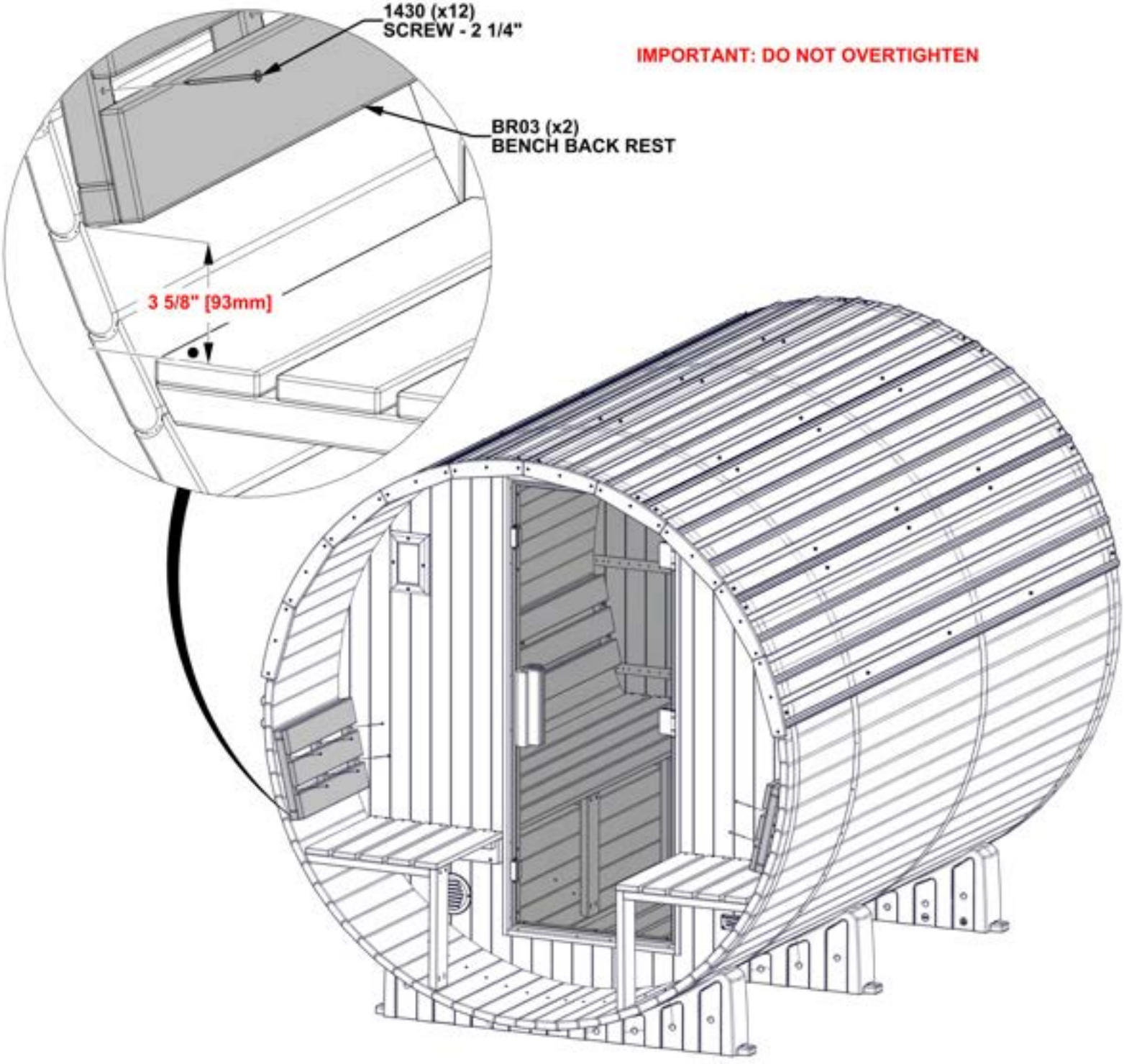

STEP 52 - TOWEL HANGER INSTALLATION

QTY	PART NUMBER	DESCRIPTION
4	H101423	SCREW TFH 8X7/8 SS-BLK



A4M05672 (x2) TOWEL HANGER

- INSTALL TOWEL HANGERS AT ANY DESIRED LOCATION ON THE RIGHT SIDE.
- HOWEVER, DO NOT INSTALL SCREWS AT THE SEAMS OF PANEL BOARDS.

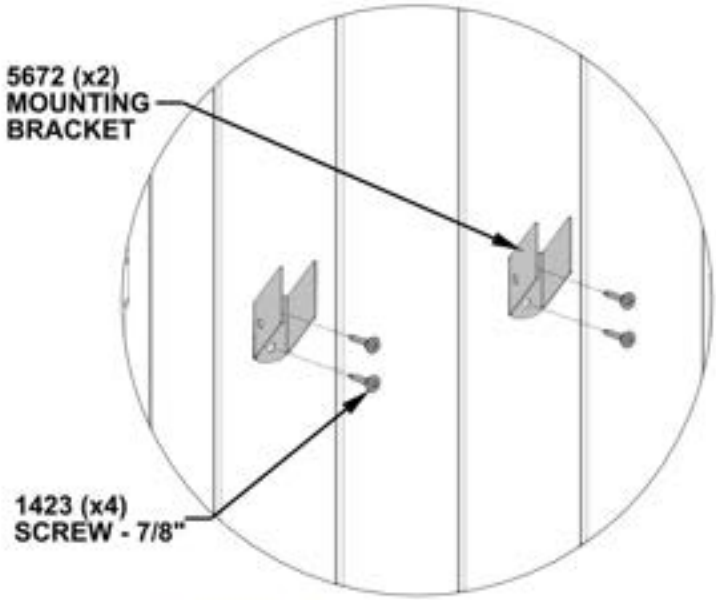

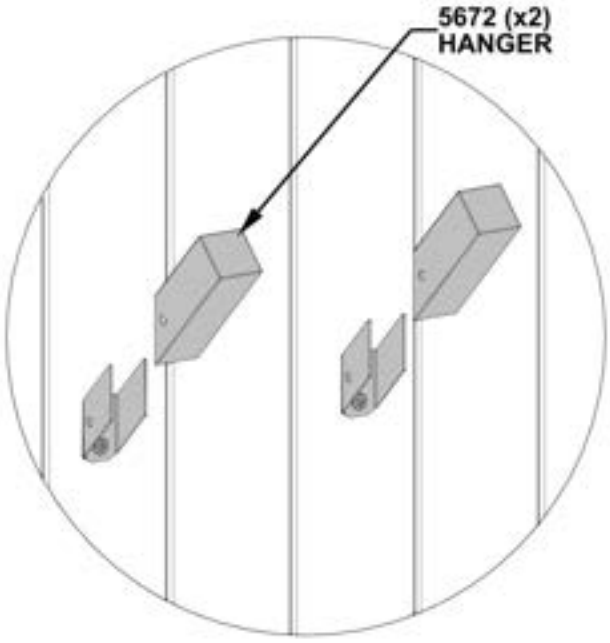

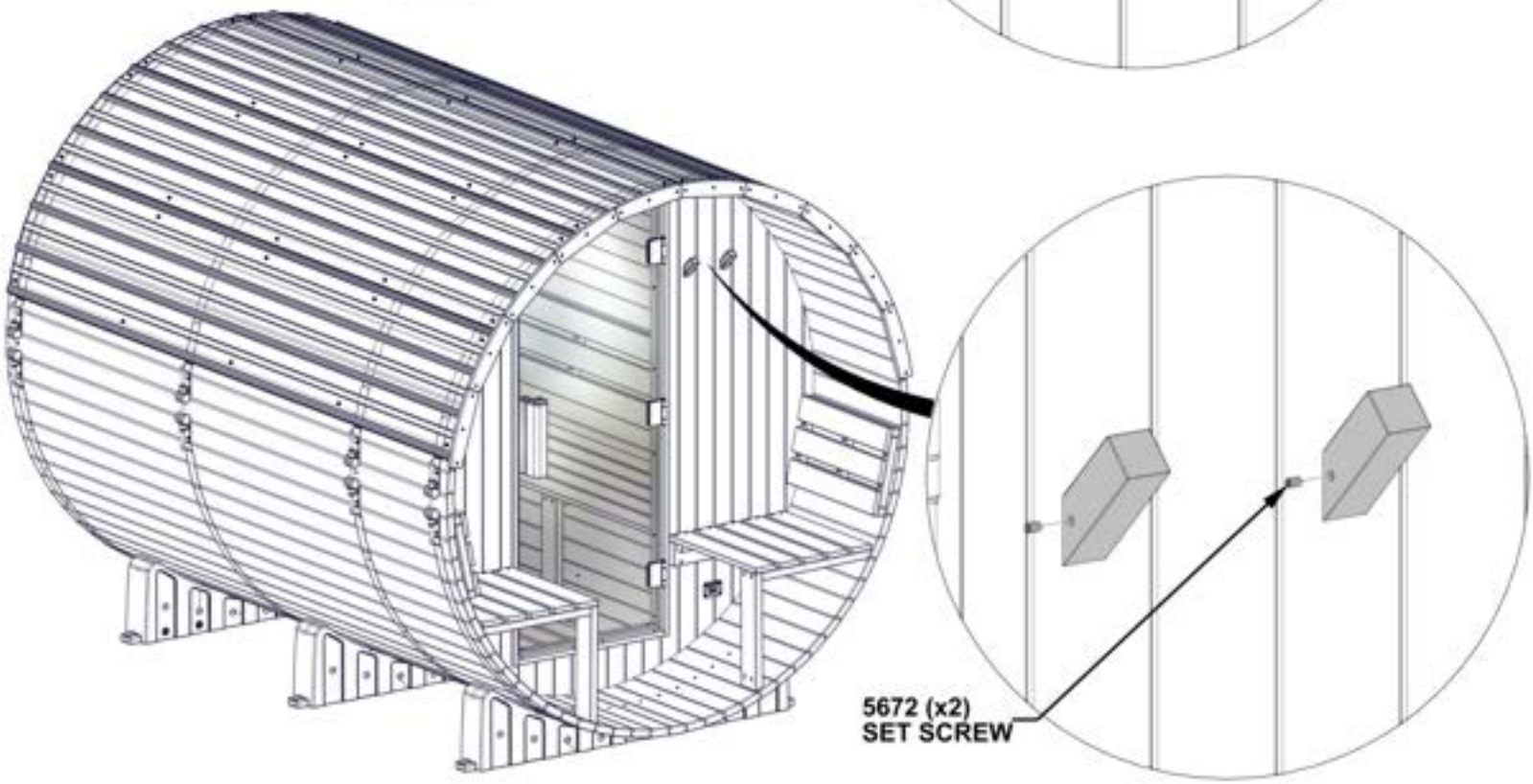

STEP 53 - HYGROMETER INSTALLATION

QTY	PART NUMBER	DESCRIPTION
1	H101423	SCREW TFH 8X7/8 SS-BLK

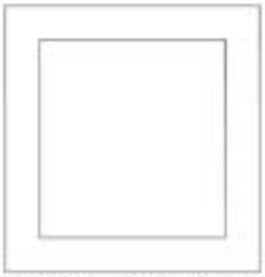

A6P01698 (x1) HYGROMETER

- INSERT SCREW INTO BACK WALL IN APPROXIMATE LOCATION SHOWN AND HANG HYGROMETER ON IT.

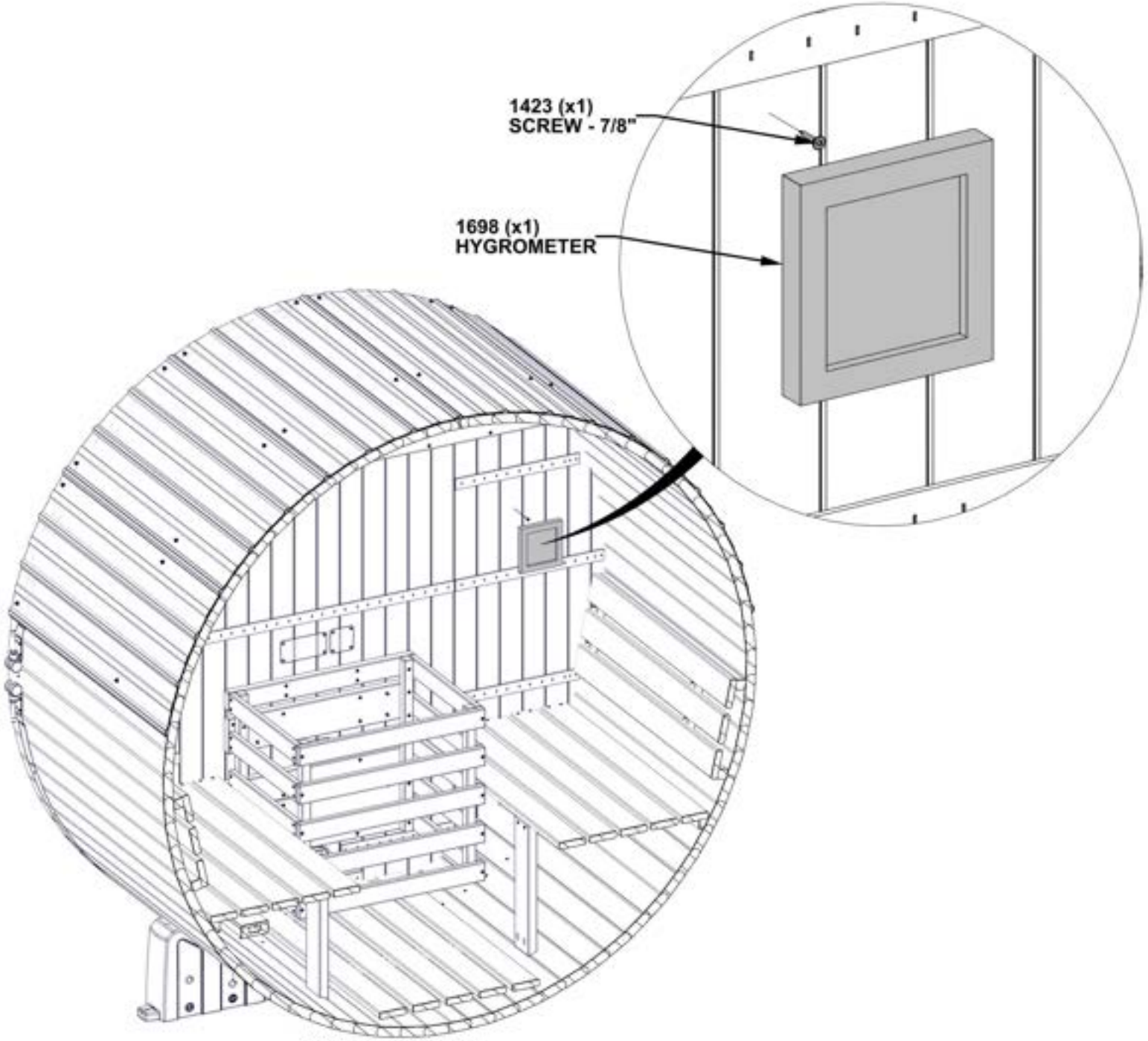

FRONT OF SAUNA
HIDDEN FOR DETAIL.

STEP 54 - HEATER INSTALLATION



A4M07271 HEATER 9KW
(x1)

- CAUTION: IMPROPER INSTALLATION OF THE HEATER COULD CAUSE HEATER TO FALL CAUSING BURNS OR OTHER INJURIES.
- DANGER! TURN OFF POWER TO THE HEATER AT THE BREAKER BEFORE BEGINNING INSTALLATION OR PERFORMING ANY MAINTENANCE. FAILURE TO TURN OFF THE POWER CAN RESULT IN ELECTROCUTION AND EVEN DEATH.
- LICENSED ELECTRICIAN REQUIRED FOR HEATER INSTALLATION - SEE HEATER INSTRUCTIONS.
- HANG HEATER ONTO SCREWS, ENSURING ALL 8 SCREWS ARE ALIGNED INTO THE SLOTS IN THE HEATER AS SHOWN.

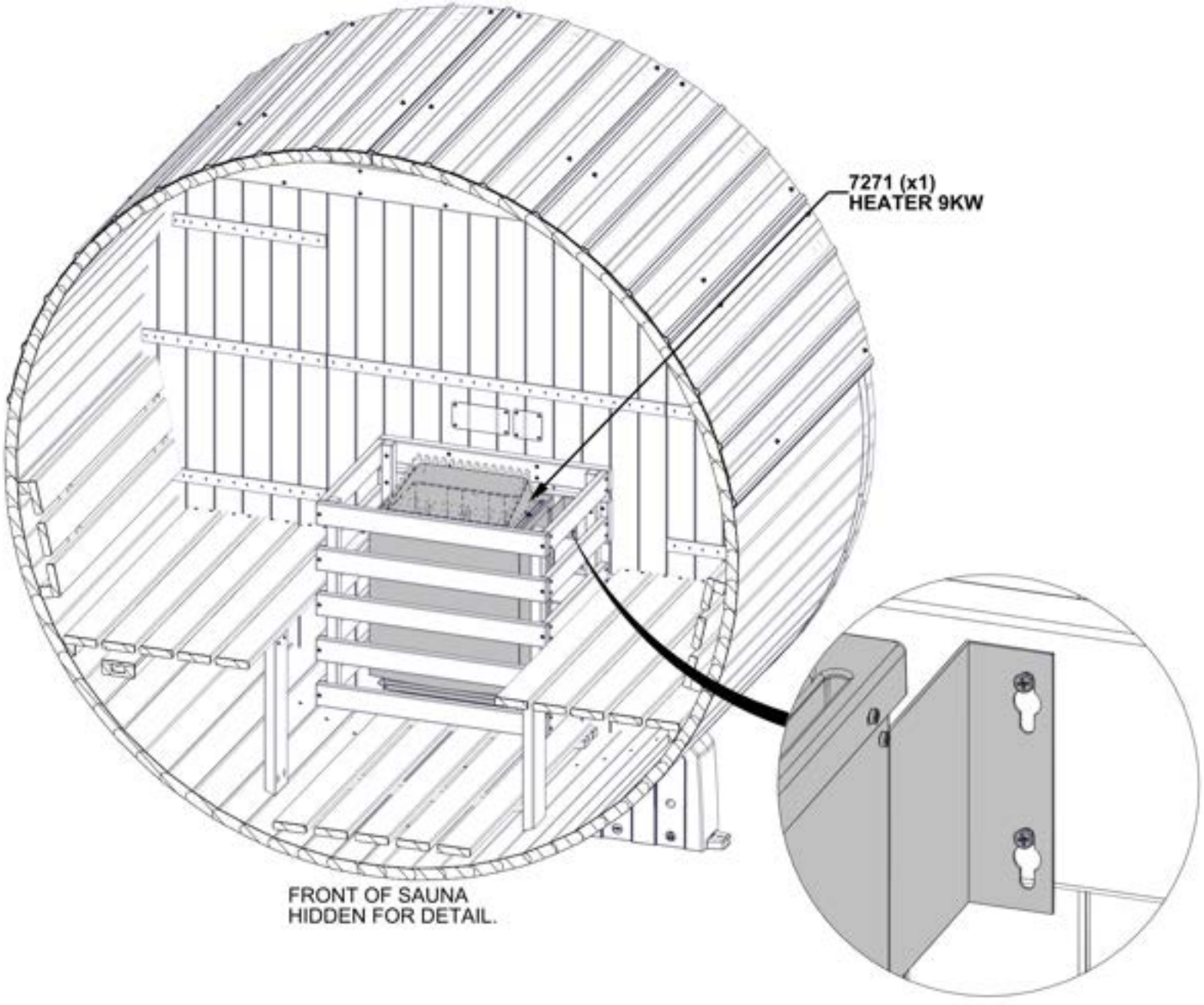

STEP 55 - ELECTRICAL

QTY	PART NUMBER	DESCRIPTION
5	H101409	SCREW PPH 4x1/2 BLK



A6P01468 30mm SILICONE GROMMET
(x1)



A6P01732 SAUNA POWER WIRE
(x1)



A6P01448 ZIP CABLE TIE
(x5)

- USE PROVIDED GROMMET FOR POWER WIRE.
- SEE HEATER INSTRUCTIONS FOR INSTALLATION.
- WILL NEED TO REMOVE CONDUIT FITTING TO FEED SAUNA POWER WIRE THROUGH GROMMET.

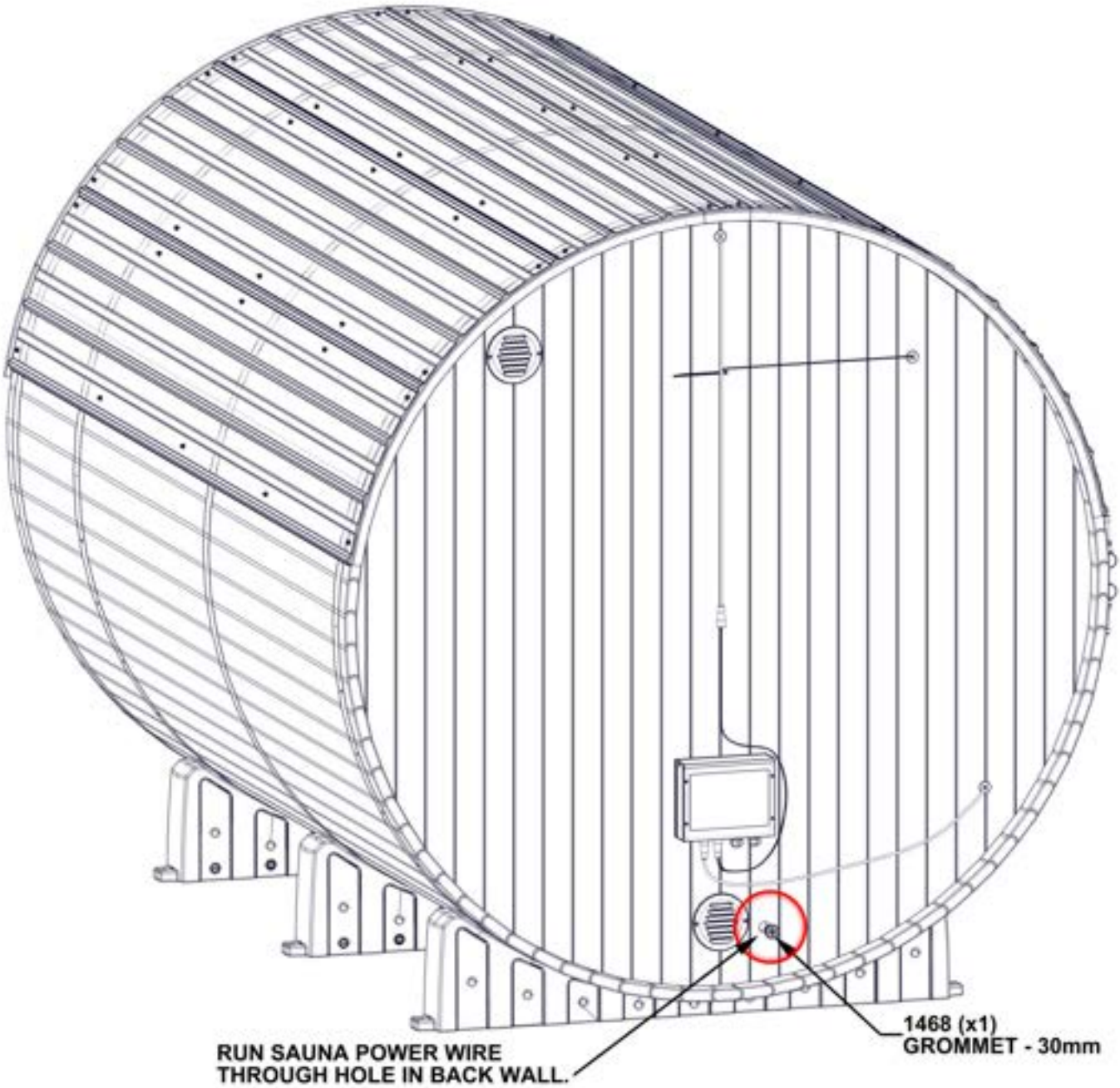

STEP 56 - FLASHING INSTALLATION

QTY	PART NUMBER	DESCRIPTION
3	H101480	SCREW SELF TAPPING #9x1 BLK

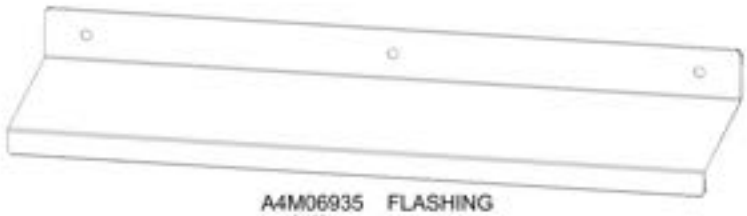

A4M06935 FLASHING
(x1)

- CENTER FLASHING OVER THE CONTROL BOX AND ATTACH AS SHOWN.

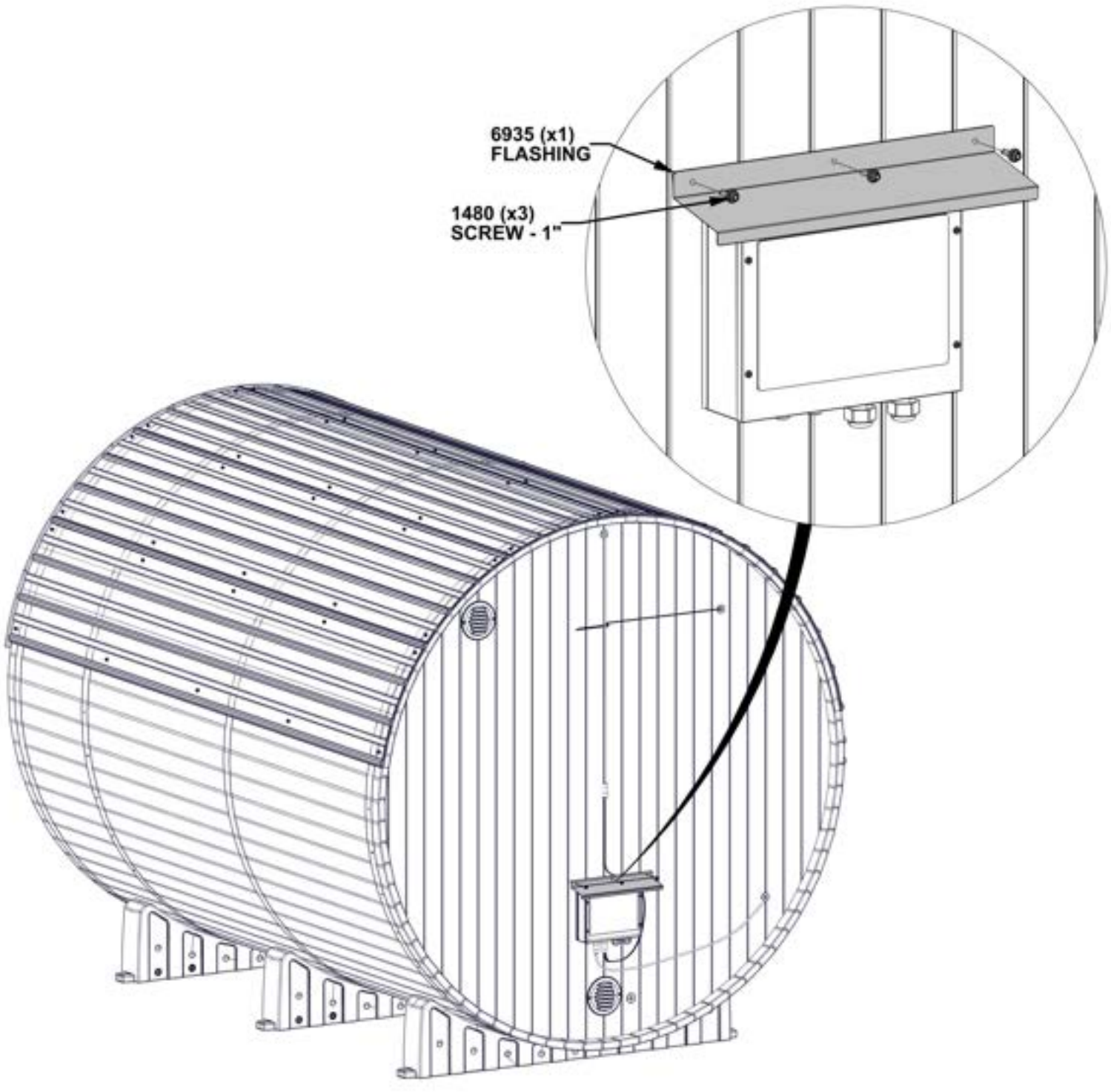

STEP 57 - FINISH

ONCE THE ASSEMBLY IS COMPLETE, SWEEP AND VACUUM THE INSIDE OF THE SAUNA. WIPE DOWN THE ENTIRE SAUNA WITH A DAMP CLOTH TO REMOVE ANY REMAINING DIRT, DUST, AND DEBRIS. DO NOT USE CHEMICAL-BASED CLEANING AGENTS INSIDE THE SAUNA.

