RANGE
OUTDOOR LIVING

Manufactured by:
Range Outdoor Living
3305 Airport Drive, Pittsburg, KS 66762
833-689-8428

Basepoint Business Centre: Rivermead Drive,Westlea, Swindon SN5 7EX Phone:
0800-118-2476 J.P. Coenstraat 7, The Bridge, The Hague, 2595 WP, Netherlands Phone: 08005678990

LANGSTON APPLIANCE-READY OUTDOOR KITCHEN WITH REFRIGERATOR

MODEL # : 2404168

WARNING
Cancer and Reproductive Harm
www.P65Warnings.ca.gov

USE THIS ASSEMBLE INSTRUCTION IF OUTDOOR KITCHEN WAS PURCHASED WITHOUT APPLIANCES



Please visit www.rangeoutdoorliving.com
For the most up to date assembly manual, to register your product, or to order replacement parts *Para obtener instrucciones en español, visite www.rangeoutdoorliving.com*

BILT®
EASY STEP-BY-STEP
3D INTERACTIVE INSTRUCTIONS
DOWNLOAD THE FREE APP
App Store Google play

OWNER'S MANUAL - BASIC SETUP DIMENSIONS & ASSEMBLY NOTES

It is critically important that you start with square and level footings or concrete pad to attach your structure

- **Pay close attention to the items needed for each step. Make sure you are using the correct hardware for each step. Using incorrect hardware may result in improper assembly**
- **Remember to double check for underground utilities and overhead electrical lines**

Post mounts are provided with your structure which allows you to permanently install your structure to a pre-existing or new wood or concrete surface. See Anchor Instructions for further details and recommendations.

- **The hardware to attach the post mounts to the structure is included.**
- **The hardware to mount the structure permanently to a concrete surface is included.**
- **The hardware to mount the structure permanently to a wood deck is NOT included and will need to be purchased separately. You must ensure there is ample structural support under the deck before permanently attaching.**

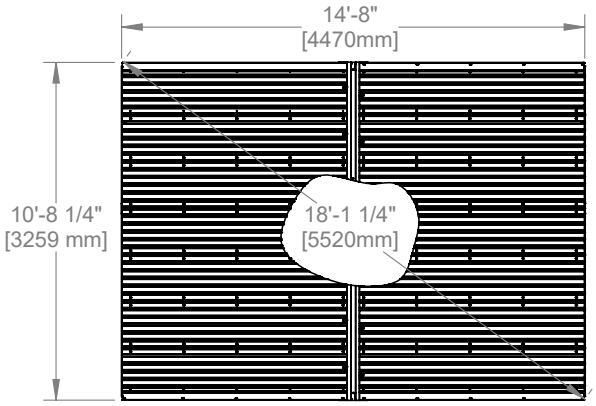

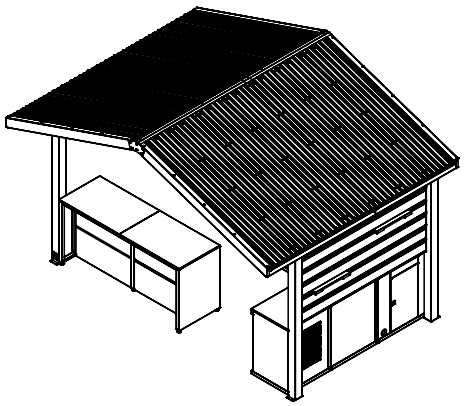

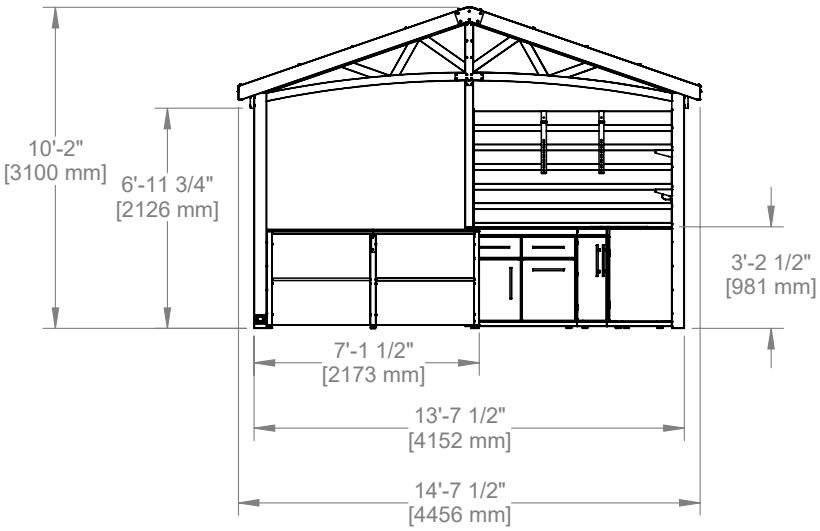

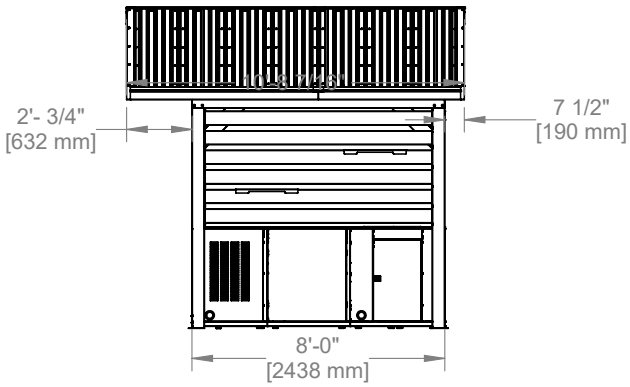

IMPERIAL MEASUREMENTS ROUNDED TO THE NEAREST 1/4"

OWNER'S MANUAL - ANCHORING LAYOUT

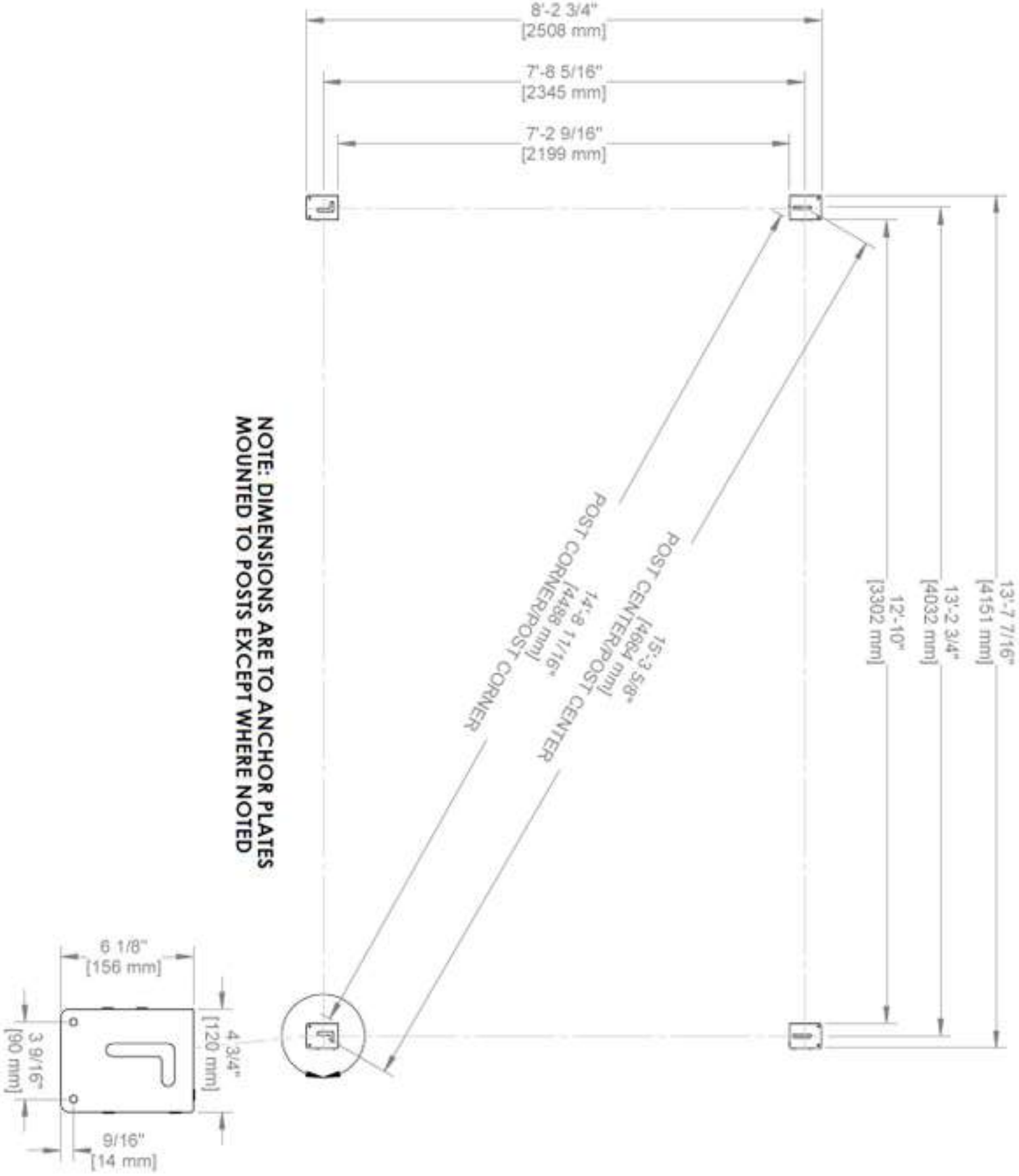

OWNER'S MANUAL - UTILITY LAYOUT

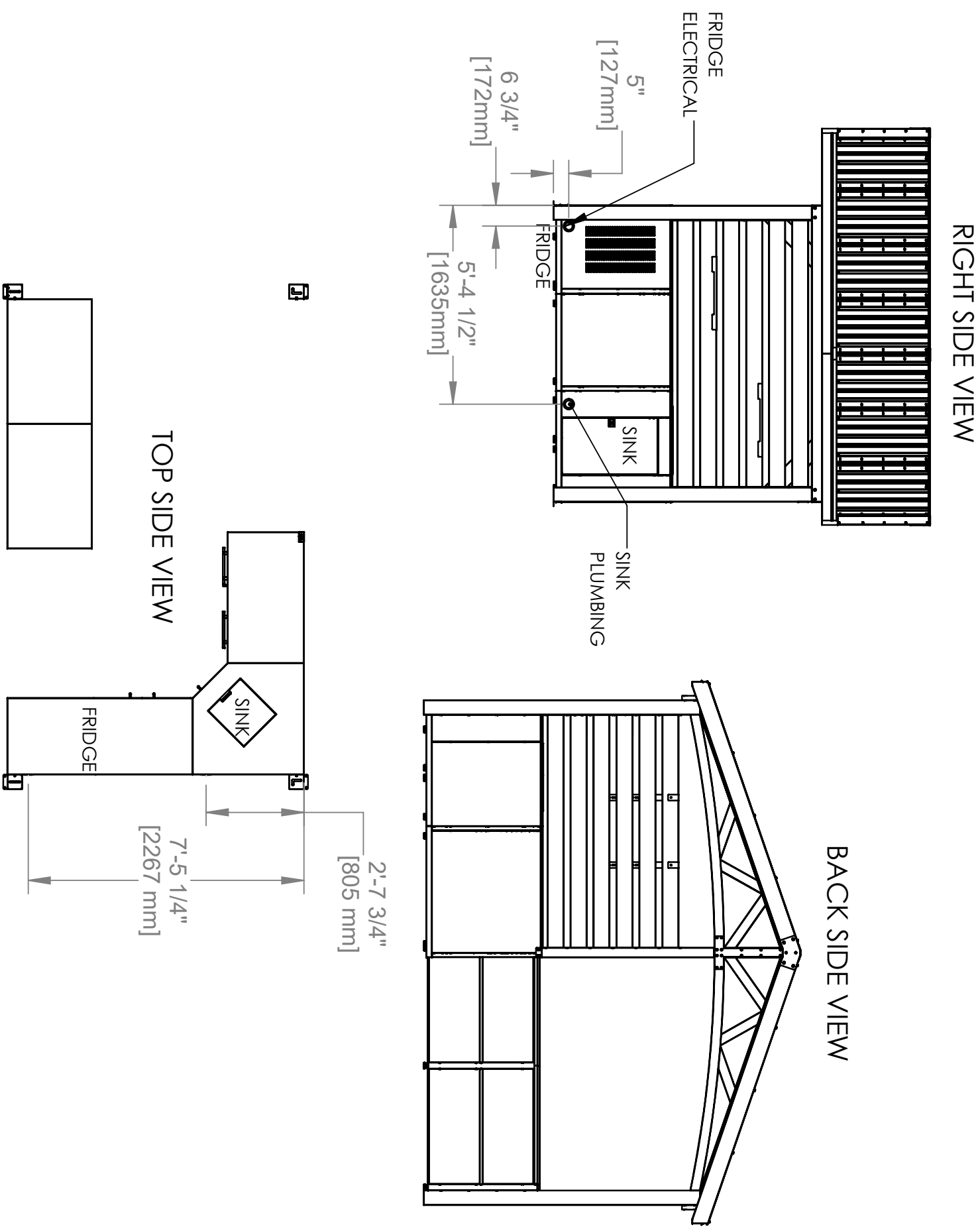

IMPERIAL MEASUREMENTS ROUNDED TO THE NEAREST 1/4"

OWNER'S MANUAL - PARTS IDENTIFICATION

METAL COMPONENTS (NOT TO SCALE)



P01 FRONT POST - A4M04166
(x1) 89 1/2"x6 1/8"x4 3/4" (120x155x2275)



P02 FRONT POST - A4M04167
(x1) 4 3/4"X6 1/8"X89 9/16" (120x155x2275)



P03 BACK POST - A4M04168
(x1) 89 9/16"x6 1/8"x4 3/4" (120x155x2275)



P04 BACK POST - A4M04169
(x1) 89 9/16"x6 1/8"x4 3/4" (120x155x2275)



P05 BACK POST - A4M04191
(x1) 1 9/16"x3 1/8"x57 3/4" (42.5x80x1467)

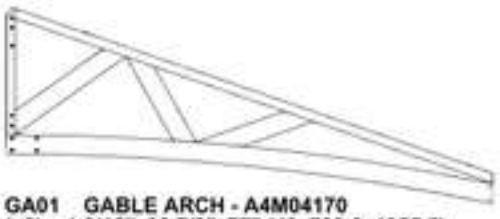

GA01 GABLE ARCH - A4M04170
(x2) 1 9/16"x30 7/8"x77" (40x783.6x1955.5)



GA02 GABLE ARCH - A4M04171
(x2) 1 9/16"x30 7/8"x77" (40x783.6x1955.5)



B09 WALL PANEL - A4M04192
(x2) 1 7/16"x22 11/16"x86 1/2" (36x576.5x2197)



B10 WALL PANEL - A4M04193
(x2) 1 7/16"x22 11/16"x75 3/8" (36x576.5x1915)



C01 CORBEL ASSEMBLY - A4M04186
(x2) 23 3/8"x8 9/16"x1 7/16" (36x217x593)



C02 CORBEL ASSEMBLY - A4M04197
(x1) 22 5/16"x5 1/4"x2 3/4" (70x134x566)



C03 CORBEL ASSEMBLY - A4M04198
(x1) 2 3/4"x5 1/4"x22 5/16" (70x134x566)

OWNER'S MANUAL - PARTS IDENTIFICATION

METAL COMPONENTS (NOT TO SCALE)

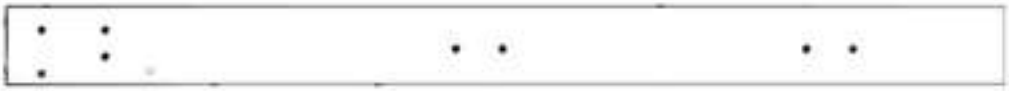

B01 RIDGE BEAM ASSEMBLY - A4M04173
(x1) 67 1/4"x5 1/4"x1 7/16" (36x134x1708)



B02 RIDGE BEAM ASSEMBLY - A4M04174
(x1) 61"x5 1/4"x1 7/16" (36x134x1550)

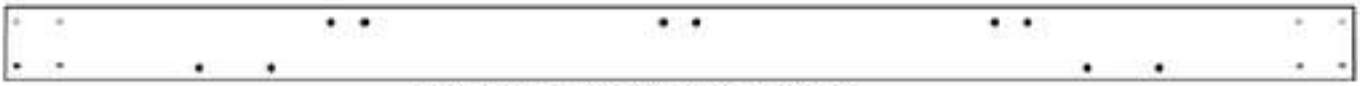

B03 SIDE BEAM ASSEMBLY - A4M04187
(x1) 96"x5 1/4"x1 7/16" (36x134x2438)

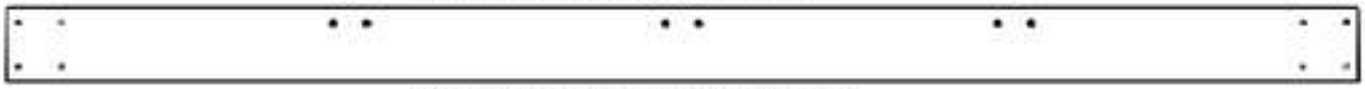

B04 SIDE BEAM ASSEMBLY - A4M04199
(x1) 96"x5 1/4"x1 7/16" (36x134x2438)

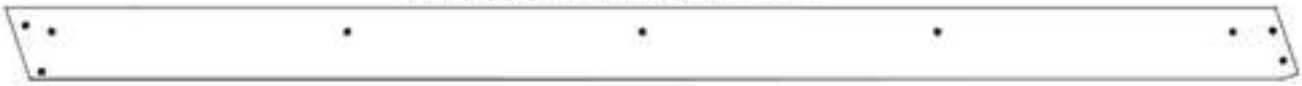

B05 GABLE BEAM ASSEMBLY - A4M04175
(x2) 93 11/16"x5 1/4"x1 7/16" (36x134x2379)

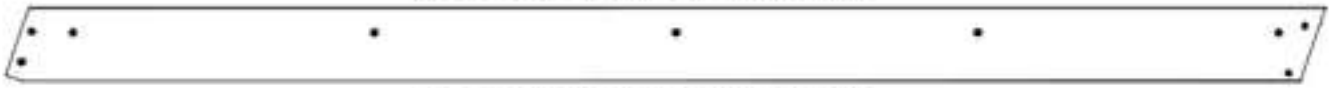

B06 GABLE BEAM ASSEMBLY - A4M04176
(x2) 93 11/16"x5 1/4"x1 7/16" (36x134x2379)



B07 DRIP BEAM ASSEMBLY - A4M04177
(x2) 54 1/16"x4 13/16"x1 7/16" (36x122x1372.50)



B08 DRIP BEAM ASSEMBLY - A4M04178
(x2) 71 3/8"x4 13/16"x1 7/16" (36x122x1813.5)

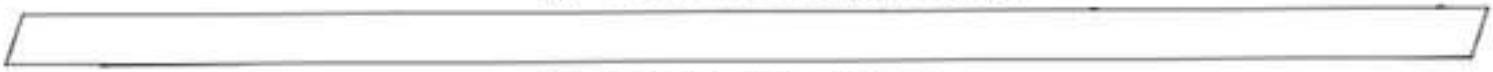

R01 RAFTER ASSEMBLY - A4M04179
(x6) 91 1/2"x4 5/16"x3 1/8" (80x110x2325)



R02 RAFER ASSEMBLY - A4M04183
(x2) 91 1/2"x4 5/16"x3 1/8" (80x110x2325)

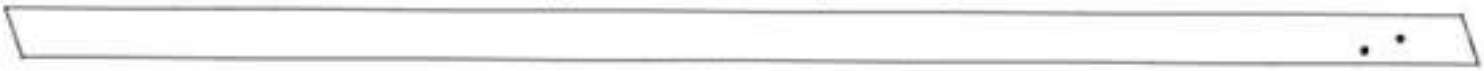

R03 RAFTER ASSEMBLY - A4M04188
(x2) 91 9/16"x4 5/16"x3 1/8" (80x110x2325)



E01 PURLIN ASSEMBLY - A4M04180
(x10) 71 5/16"x1 15/16"x1 9/16" (40x50x1812)



E02 PURLIN ASSEMBLY - A4M04181
(x10) 53 15/16"x1 15/16"x1 9/16" (40x50x1370)

OWNER'S MANUAL - PARTS IDENTIFICATION

METAL COMPONENTS (NOT TO SCALE)



J2 SPLICE BRACKET - A4M01270
(x1) 1 1/4"X5 1/8"X15 3/4" (33x131x400)



J6 SPLICE BRACKET - A4M03806
(x2) 19 11/16"x4 11/16"x32.5 (32.5x118.5x500)



J3 GABLE BRACKET - A4M03805
(x2) 11 1/8"x6 7/16"x1/16" (2x163x282)



J4 GABLE POST BRACKET - A4M04172
(x4) 1"x1 7/16"x2 7/8" (25x37.2x73)



J5 RAFTER BRACKET - A4M03803
(x6) 3 5/8"x2 11/16"x2 1/16" (52x68x91.5)



J7 RAFTER BRACKET - A4M03802
(x4) 3 5/8"x2 3/16"x2" (50x55x92)



J8 GABLE BRACKET - A4M03804
(x4) 4 13/16"x1 9/16"x1 9/16" (40x40x123)



J9 BEAM BRACKET - A4M03807
(x4) 5 9/16"x1 5/16"x4 9/16" (140.57x33.20x116)



J10 SUPPORT RING - A4M03808
(x4) 13/16"x7/16" (11x20)



A03 BACK SHELF - A4M02072
(x2) 2 7/16"x7 15/16"x23 3/4" (61x201x603)



A4 GABLE BRACKET - A4M04196
(x1) 1/16"x6 3/4"x10 11/16" (2x172x272)



G8 GABLE BRACKET - A4M05362
(x2) 1/16"x10 11/16"x21 15/16" (2x272x557)



A7 GABLE BRACKET - A4M04184
(x1) 1/16"x4 13/16"x10 11/16" (2x122x272)



A8 RIDGE GABLE BRACKET - A4M04185
(x2) 1 1/4"x2 13/16"x4 1/8" (31.5x72x105)



A4M01352 HOLE COVER
(x16)



A4M02290 MAGNETIC PAPER TOWEL HOLDER
(x1)



A6P00679 ADHESIVE EVA TAPE
(x8)



A4M05361 TV BRACKET
(x2)

OWNER'S MANUAL - PARTS IDENTIFICATION

METAL COMPONENTS (NOT TO SCALE)



A6P00530 2-WAY SQUARE PLUG
(x10)



A4M05365 DRIP EDGE SPLICE
(x2)



A4M03535 RIDGE CAP SPLICE
(x1)

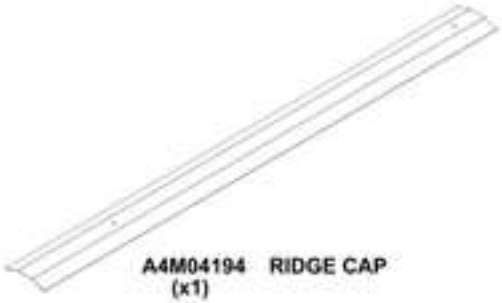

A4M04194 RIDGE CAP
(x1)

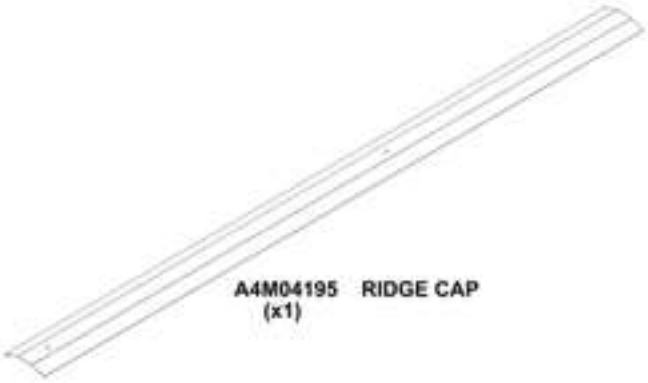

A4M04195 RIDGE CAP
(x1)

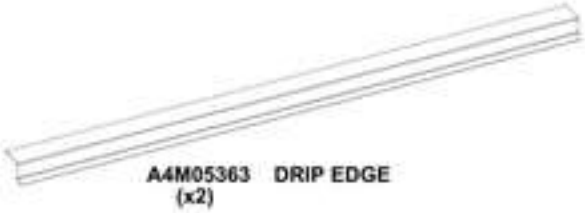

A4M05363 DRIP EDGE
(x2)

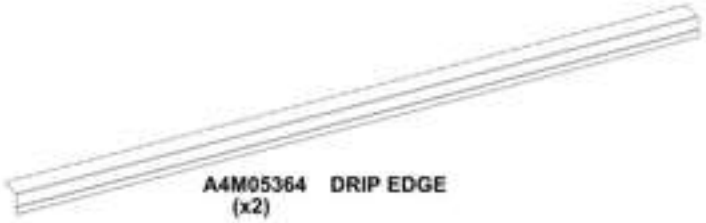

A4M05364 DRIP EDGE
(x2)



A4M04182 STEEL SHEETING
(x14)

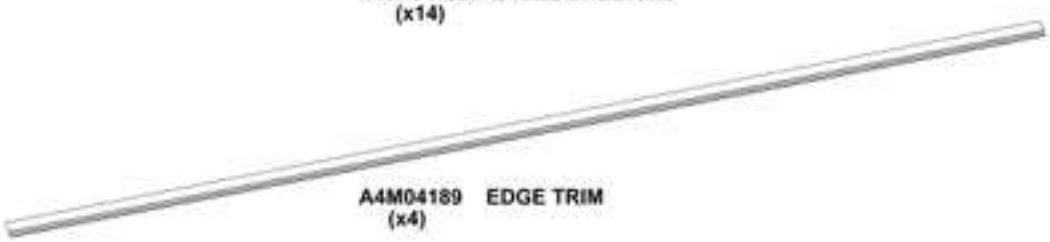

A4M04189 EDGE TRIM
(x4)

OWNER'S MANUAL - PARTS IDENTIFICATION

METAL COMPONENTS (NOT TO SCALE)



D1 RIGHT CABINET DOOR ASSEMBLY L - A4M04454
(x1) 31 3/4"x15 9/16"x15/16" (24x396x807)



D2 RIGHT CABINET DOOR ASSEMBLY R - A4M04455
(x1) 31 3/4"x15 9/16"x15/16" (24x396x807)



D3 SINK CABINET DOOR ASSEMBLY - A4M04462
(x1) 31 3/4"x15 11/16"x15/16" (24x398x807)



D4 SINK CABINET PUSH DOOR ASSEMBLY - A4M04479
(x1) 31 3/4"x18 1/4"x15/16" (23.2x463x807.2)



D5 TRASH CAN DOOR PANEL ASSEMBLY - A4M04474
(x1) 23 1/4"x20 5/16"x15/16" (24x515.2x590.5)



D6 LEFT CABINET DRAWER BODY ASSEMBLY - A4M04475
(x2) 18 3/8"x22 9/16"x4 3/4" (121x573.4x467.2)



D7 LEFT CABINET DRAWER PANEL ASSEMBLY - A4M04476
(x2) 20 5/16"x7 7/8"x15/16" (24x200x515.2)



D8 LEFT CABINET DOOR PANEL ASSEMBLY - A4M04497
(x1) 23 1/4"x20 5/16"x15/16" (24x515.2x590.5)



F1 FRIDGE CABINET FLOOR ASSEMBLY - A4M04443
(x1) 28 5/8"x24 3/4"x1 3/4" (45x628.50x727)



F2 RIGHT CABINET FLOOR PANEL ASSEMBLY - A4M04493
(x1) 31 3/8"x24 3/4"x1 3/4" (45x628.5x797)



F3 SINK CABINET FLOOR PANEL ASSEMBLY - A4M04441
(x1) 36"x36"x2 5/8" (66x914x914)



F4 LEFT CABINET FLOOR PANEL ASSEMBLY - A4M04463
(x1) 42 7/16"x24 3/4"x1 3/4" (45x628.50x1077.50)

OWNER'S MANUAL - PARTS IDENTIFICATION

METAL COMPONENTS (NOT TO SCALE)



G1 FRIDGE CABINET BACK PANEL ASSEMBLY - A4M04447
(x1) 35 1/4"x25 3/8"x1 3/16" (30x644x896)



G2 RIGHT CABINET BACK PANEL ASSEMBLY - A4M04451
(x1) 35 1/4"x29 15/16"z1 3/16" (30x760x896)



G3 SINK CABINET BACK PANEL ASSEMBLY - A4M04456
(x1) 35 1/4"x27 1/4"x1 3/16" (30x692x896)



G4 SINK CABINET BACK PANEL ASSEMBLY - A4M04457
(x1) 35 1/4"x8 5/8"x1 3/16" (30x218.50x896)



G5 SINK CABINET BACK PANEL ASSEMBLY - A4M04477
(x1) 35 1/4"x8 11/16"x (220x220x896)



G6 LEFT CABINET BACK PANEL ASSEMBLY - A4M04467
(x1) 39 9/16"x35 1/4"x1 3/16" (30x896x1004.5)

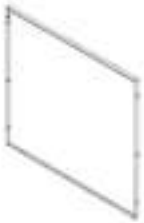

G7 BAR TABLE BACK PANEL - A4M04488
(x2) 37 5/16"x34 1/2"x1" (25x877x948.5)



L1 RIGHT CABINET SHELF - A4M04496
(x2) 30 1/16"x23 1/4"x1" (25x590x764.2)



L2 BAR TABLE SHELF ASSEMBLY - A4M04489
(x2) 37 5/16"x18 3/16"x1" (25x462x947.5)



S1 FRIDGE CABINET SIDE PANEL ASSEMBLY L - A4M04445
(x1) 35 1/4"x23 11/16"x1 9/16" (40x601.5x896)



S2 FRIDGE CABINET SIDE PANEL ASSEMBLY R - A4M04446
(x1) 35 1/4"x23 11/16"x1 9/16" (40x601.5x896)



L5 SHELF - A4M05765
(x1) 23 5/8"x19"x1" (25x482x600)

OWNER'S MANUAL - PARTS IDENTIFICATION

METAL COMPONENTS (NOT TO SCALE)



S3 RIGHT CABINET SIDE PANEL ASSEMBLY L - A4M04450
(x1) 35 1/4"x23 11/16"x1 3/8" (35x601.5x896)



S4 LEFT CABINET SIDE PANEL ASSEMBLY R - A4M04465
(x1) 35 1/4"x23 11/16"x1 7/8" (48.3x601.5x896)



S5 LEFT CABINET SIDE PANEL ASSEMBLY L - A4M04466
(x1) 35 1/4"x23 11/16"x1 7/8" (48.3x601x896)



S6 LEFT CABINET SIDE PANEL ASSEMBLY M - A4M04469
(x1) 34 1/8"x23 9/16"x2 3/4" (69.6x599x866)



S7 BAR TABLE SIDE PANEL ASSEMBLY R - A4M04485
(x1) 36 7/8"x27 3/8"x1 15/16" (50x696x936.5)



S8 BAR TABLE SIDE PANEL ASSEMBLY L - A4M04492
(x1) 36 7/8"x27 3/8"x1 15/16" (50x696x936.5)



T1 FRIDGE CABINET TABLETOP ASSEMBLY - A4M04448
(x1) 25 3/8"x22 7/16"x1 3/16" (30x569.5x644)



T2 RIGHT CABINET TABLETOP ASSEMBLY - A4M04452
(x1) 29 15/16"x22 7/16"x1 3/16" (30x569.5x760)



T3 SINK CABINET TABLETOP ASSEMBLY - A4M04458
(x1) 34 3/4"x34 3/4"x1 3/16" (30x882x882)



T4 LEFT CABINET TABLETOP PANEL ASSEMBLY - A4M04468
(x1) 39 9/16"x22 7/16"x1 3/16" (30x569.5x1004.5)



T5 BAR TABLETOP - A4M04487
(x2) 38 3/8"x27 3/8"x1" (25x696x974.5)



H10 TUBE FRAME SUPPORT - A4M04490
(x1) 35 15/16"x18 1/4"x1 15/16" (50x463x912.5)

OWNER'S MANUAL - PARTS IDENTIFICATION

METAL COMPONENTS (NOT TO SCALE)



H1 FRIDGE CABINET TRIM PANEL ASSEMBLY - A4M04449
(x1) 60"x3 3/8"x2 3/16" (56x86.5x1524.5)



H2 STAINLESS STEEL HANDLE - A4M03024
(x7) 5/8"x1 9/16"x11 13/16" (16x40x300)



H3 SINK CABINET CHANNEL ASSEMBLY - A4M04459
(x1) 34 1/16"x3 5/8"x1 3/4" (45x92x865)



H4 SINK CABINET TRIM PANEL ASSEMBLY - A4M04460
(x1) 15 3/4"x4 3/8"x2 3/16" (56x80x400)



H5 SINK CABINET HINGE CHANNEL ASSEMBLY - A4M04461
(x1) 34 1/16"x3 5/8"x1 3/4" (45x92x865)

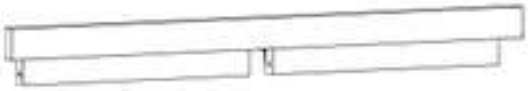

H6 LEFT CABINET TRIM PANEL ASSEMBLY R - A4M04471
(x1) 42 7/16"x4 3/8"x2 3/16" (56x111.5x1078.0)



H8 HORIZONTAL BEAM - A4M04478
(x1) 18 9/16"x3 15/16"x1 3/16" (30x100x472)



H9 LEFT CABINET HORIZONTAL BEAM ASSEMBLY - A4M04472
(x2) 18 13/16"x3 1/8"x1 3/16" (30x80x477.4)



H12 TRASH CAN BRACKET ASSEMBLY - A4M04470
(x1) 17 7/8"x18 7/16"x1 3/8" (35x467.8x454)



A1 TABLE BRACKET ASSEMBLY - A4M03634
(x1) 6 15/16"x6 15/16"x1 15/16" (50x176x176)



A2 MAGNET BRACKET - A4M03026
(x5) 1"x1 1/4"x3 1/8" (25x31x80)



A5 SHELF BRACKET - A4M03141
(x12) 5/8"x7/8"x2 1/16" (16x22x53)

OWNER'S MANUAL - PARTS IDENTIFICATION

METAL COMPONENTS (NOT TO SCALE)



A6 ANGLED BRACKET - A4M03053
(x3) 1 3/8"x1 15/16"x17 1/8" (35x50x435)



A11 TRIANGLE PANEL - A4M03086
(x2) 13/16"x13 3/4"x13 3/4" (20x350x350)



A15 DOOR STOPPER BRACKET ASSEMBLY - A4M04480
(x1) 3 15/16"x3 3/4"1 15/16" (50x95x100)



A16 SINK ASSEMBLY - A4M03143
(x1) 15 1/8"x15 5/16"x16 7/8" (384x389x429)



A12 DOOR STOPPER - A4M04128
(x1) 3 11/16"x1 3/4"x1/2" (13.3x45x94)



A4M03151 GARDEN HOSE ADAPTER
(x1)



A4M03025 FULL OVERLAY HINGE
(x8)



9205413 ELECTRICAL ENCLOSURE
(x1)



9240162 OUTDOOR KITCHEN FRIDGE - RIGHT OPEN
(x1)



M1 RIGHT CABINET COUNTERTOP - A4M04481
(x1) 60 1/16"x24 3/4"x11/16" (18x628.0x1525)



M2 SINK CABINET COUNTERTOP - A4M04483
(x1) 36"x36"x11/16" (18x915x915)



M3 LEFT CABINET COUNTERTOP - A4M04482
(x1) 42 7/16"x24 3/4"x11/16" (18x628.0x1077.5)



M4 BAR TABLE COUNTERTOP - A4M04484
(x2) 40 3/8"x27 3/8"x11/16" (18x696x1025.5)



M5 SINK COVER COUNTERTOP - A4M05949
(x1) 11/16"x14 3/4"x16 5/16" (18x375x415)

OWNER'S MANUAL - PARTS IDENTIFICATION

HARDWARE COMPONENTS

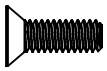

H101185 | PHILLIPS FLAT HEAD
(x48) | 8-32x.5 SCREW

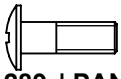

H101289 | PAN HEAD SCREW
(x51) | 8-32x1/2" SS

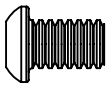

H101292 | TORX PAN HEAD
(x20) | 1/4-20x13/32"



H101293 | TORX PAN HEAD
(x4) | 1/4-20x1 3/8"

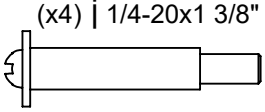

H101307 | SHOULD BOLT
(x14) | 8-32x30mm SS

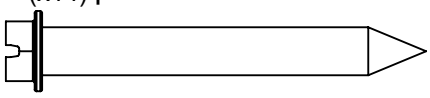

H100120 | CONCRETE ANCHOR
(x8) |

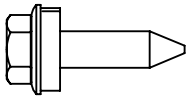

H101117 | SCREW WOODGRIP
(x140) | 10-16x3/4

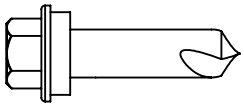

H101116 | SCREW SELF TAPPING
(x40) | 1/4x1 BLK

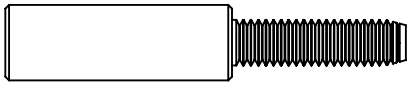

H101103 | TORX SOCKET SCREW
(x16) | 1/4-20

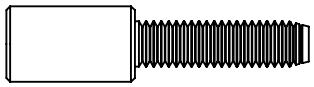

H101132 | TORX SOCKET SCREW SHORT
(x79) | 1/4-20

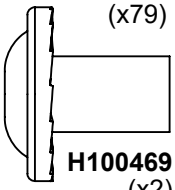

H100469 | NUT BARREL WH
(x2) | 5/16x5/8 BLK

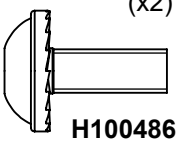

H100486 | BOLT WH BLK
(x4) | 1/4x5/8"

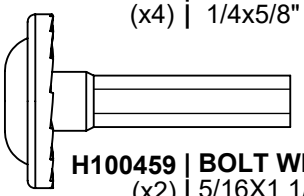

H100459 | BOLT WH BLK
(x2) | 5/16X1 1/4"

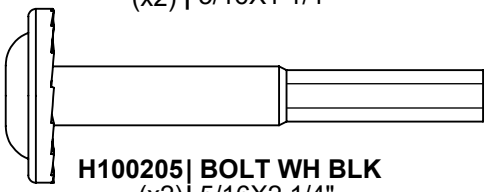

H100205 | BOLT WH BLK
(x2) | 5/16X2 1/4"



H100512 | BOLT WH BLK
(x8) | 5/16X4"

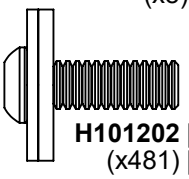

H101202 | TORX PAN HEAD
(x481) | 1/4-20x3/4 ASSY

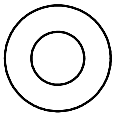

H101133 | WASHER FLAT
(x4) | 7x14 BLK

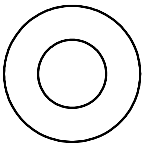

H100474 | WASHER FLAT
(x2) | 9x18 BLK

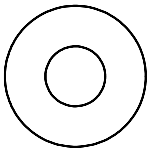

H100630 | WASHER FLAT
(x8) | 8x19 BLK

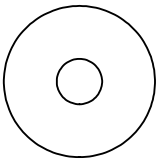

H101054 | SEALANT WASHER
(x24) |

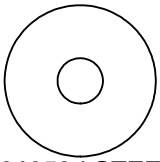

H101053 | STEEL WASHER
(x24) | 6x20

H100653 | NUT LOCK
(x4) | 1/4 BLK

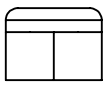

H100479 | NUT LOCK
(x2) | 5/16 BLK

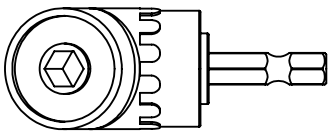

H101114 | RIGHT ANGLE
(x1) | **DRILL ADAPTER**

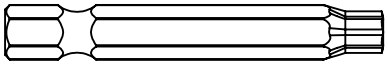

H100147 | TORX BIT
(x1) T-30

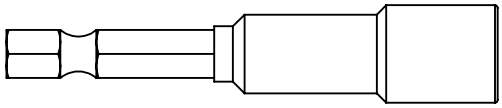

H101106 | SOCKET DRIVER
(x1) |

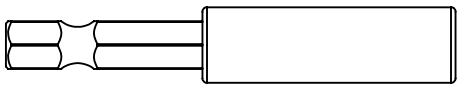

H101100 | MAGNETIC DRIVER
(x1)

H100114 | TORX WRENCH
(x1) | T-30

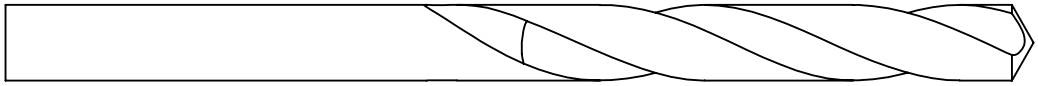

H101108 | 3/8 (10mm) DRILL BIT
(x1) |

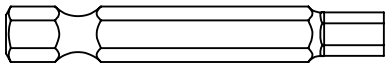

H101294 | HEX DRIVER
(x1)

PRE-ASSEMBLY STEP 1 - SORTING PARTS

It is critical for ease of assembly that you take the time to sort and organize the metal and hardware.

METAL PARTS:

- **Organize metal parts by the three-digit, alpha-numeric part label on each bag (ex. A01).**
- **If there are multiple parts with the same part label, stack those pieces together.**
- **Part labels can be found on the bags of the parts.**
- **Keep parts in bags until required step.**
- **Allow yourself plenty of room - the metal pieces can take up a significant amount of space.**

NOTE: CARTONS ARE NOT ORGANIZED BY PART OR STEP NUMBER.

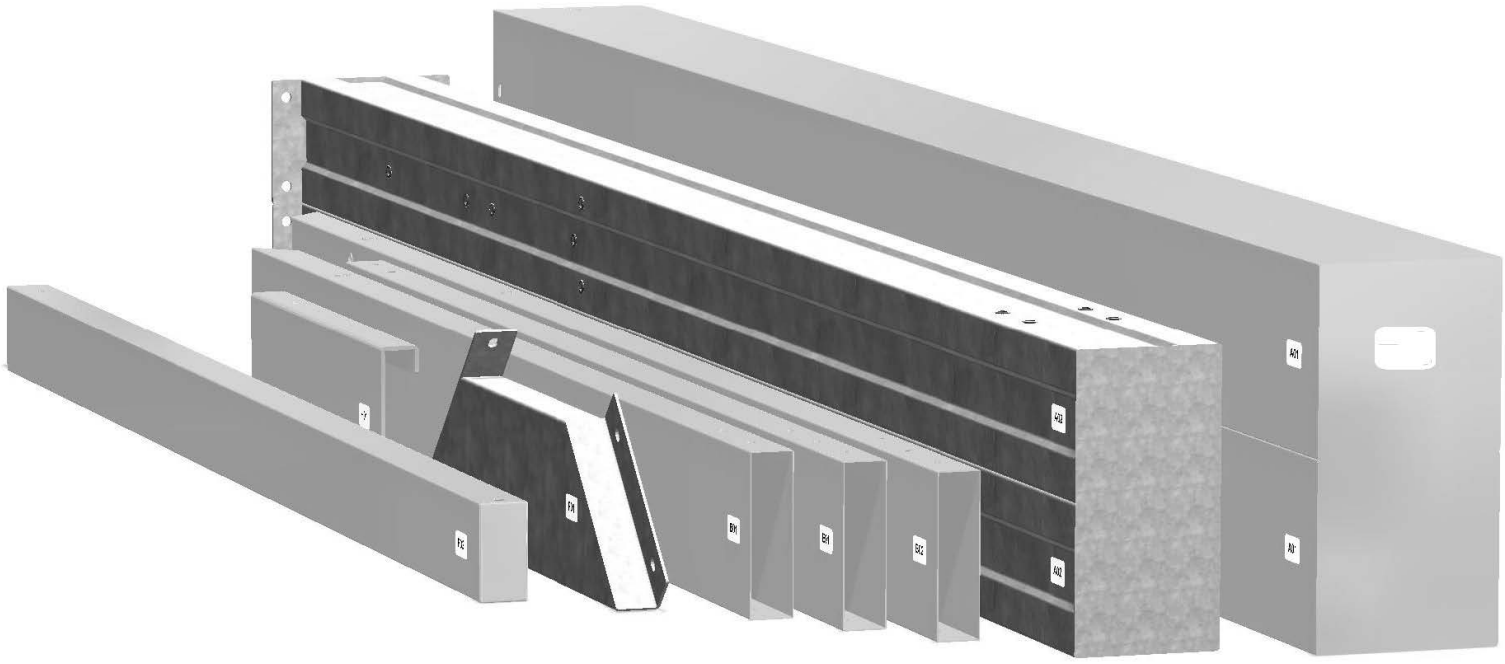

HARDWARE PARTS:

- **We recommend that you have a separate table to organize the hardware.**
- **Hardware bags are printed with a seven-digit, alpha-numeric part number.**
- **You can organize your hardware by part number or group by hardware type (e.g. bolts, nuts, etc.).**
- **During assembly you only need to reference the last four digits of the number.**

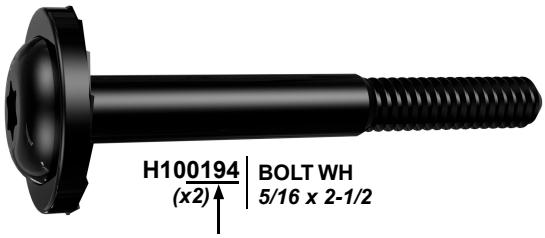

PRE-ASSEMBLY STEP 2 - TOOLS REQUIRED



Cordless Drill
or Electric Drill



Drill
Attachments:
Phillips Head



1/8", 3/16", 3/8" &
7/16" Drill Bits



Phillips Screw Driver

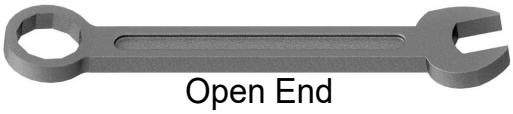

Open End
Wrenches
1/2" & 9/16"



3/8" Drive Ratchet, 1/2" &
7/16" STD Sockets 1/2" & 7/16"
Deep Sockets



Claw Hammer



Rubber Mallet
- Optional

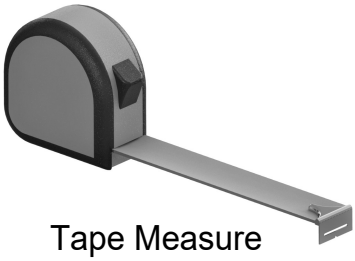

Tape Measure

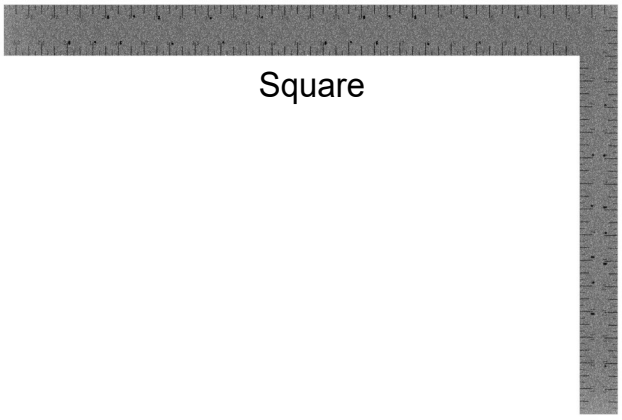

Square



Level 24"

PRE-ASSEMBLY STEP 3 - CHOOSE YOUR ASSEMBLY METHOD

There are several types of assembly instructions available to you.

1. Printed Assembly Manual included with your set
2. BILT APP - 3D interactive instructions
3. Combination of the Printed Manual and BILT APP (Note: Step numbers can differ between the two methods)



STEP 1A - GABLE ARCH ASSEMBLY

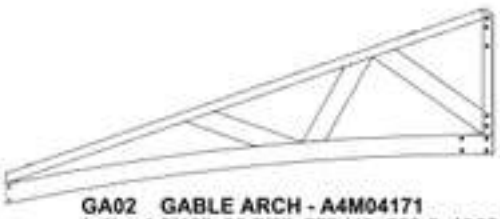

GA02 GABLE ARCH - A4M04171
(x1) 1 9/16"x30 7/8"x77" (40x783.6x1955.5)



GA01 GABLE ARCH - A4M04170
(x1) 1 9/16"x30 7/8"x77" (40x783.6x1955.5)

- FOR EASE OF ASSEMBLY, WE RECOMMEND USING SAW HORSES FOR STEPS 1-17.

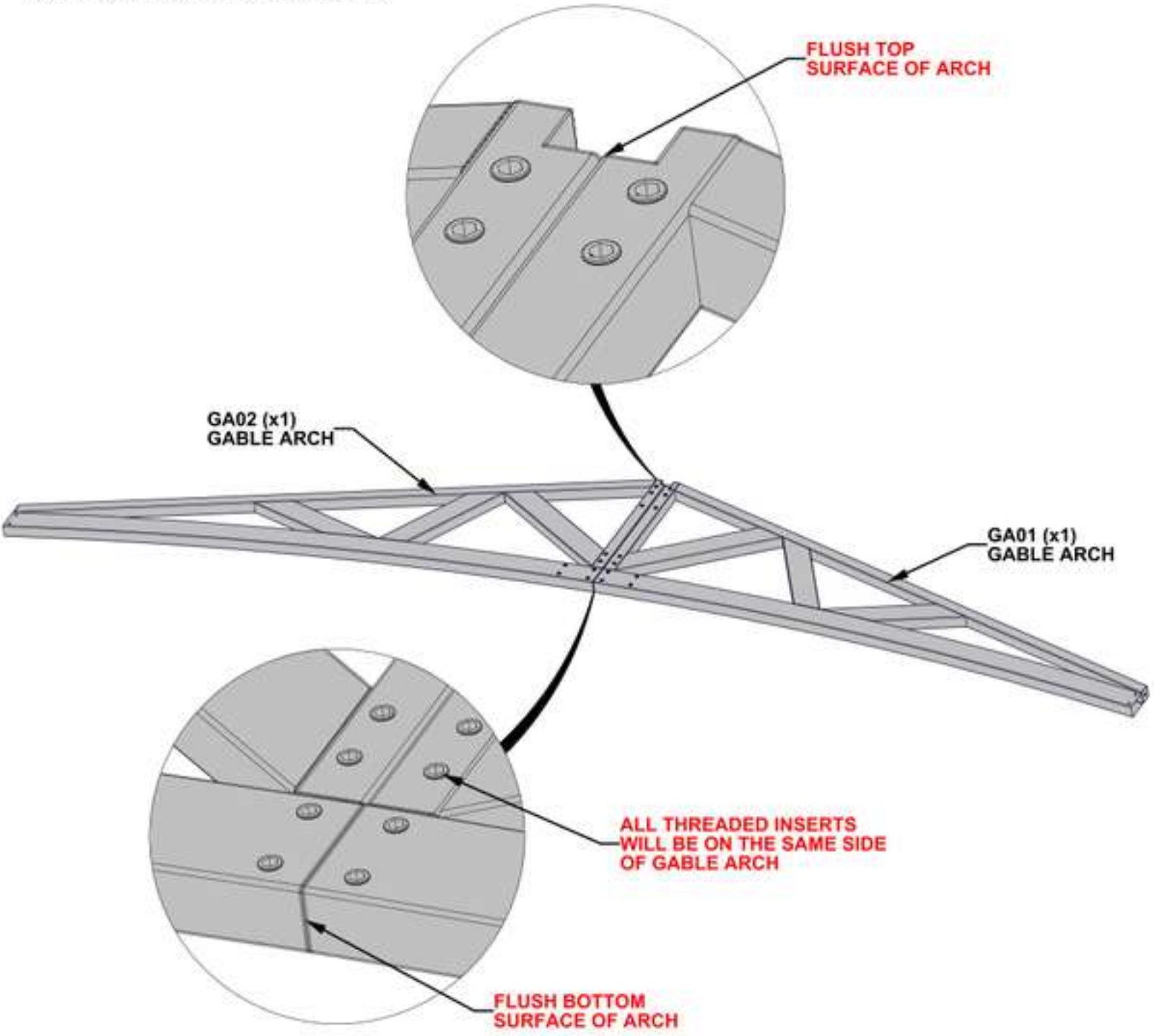

STEP 1B - GABLE ARCH ASSEMBLY

QTY	PART NUMBER	DESCRIPTION
14	H101202	TORX PAN HEAD 1/4-20x3/4 ASSY

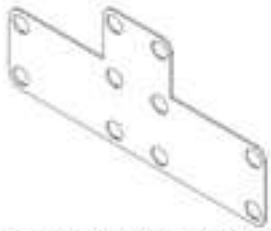

A7 GABLE BRACKET - A4M04184
(x1) 1/16"x4 13/16"x10 11/16" (2x122x272)

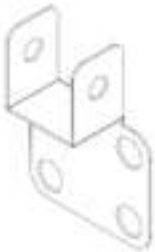

A8 RIDGE GABLE BRACKET - A4M04185
(x1) 1 1/4"x2 13/16"x4 1/8" (31.5x72x105)

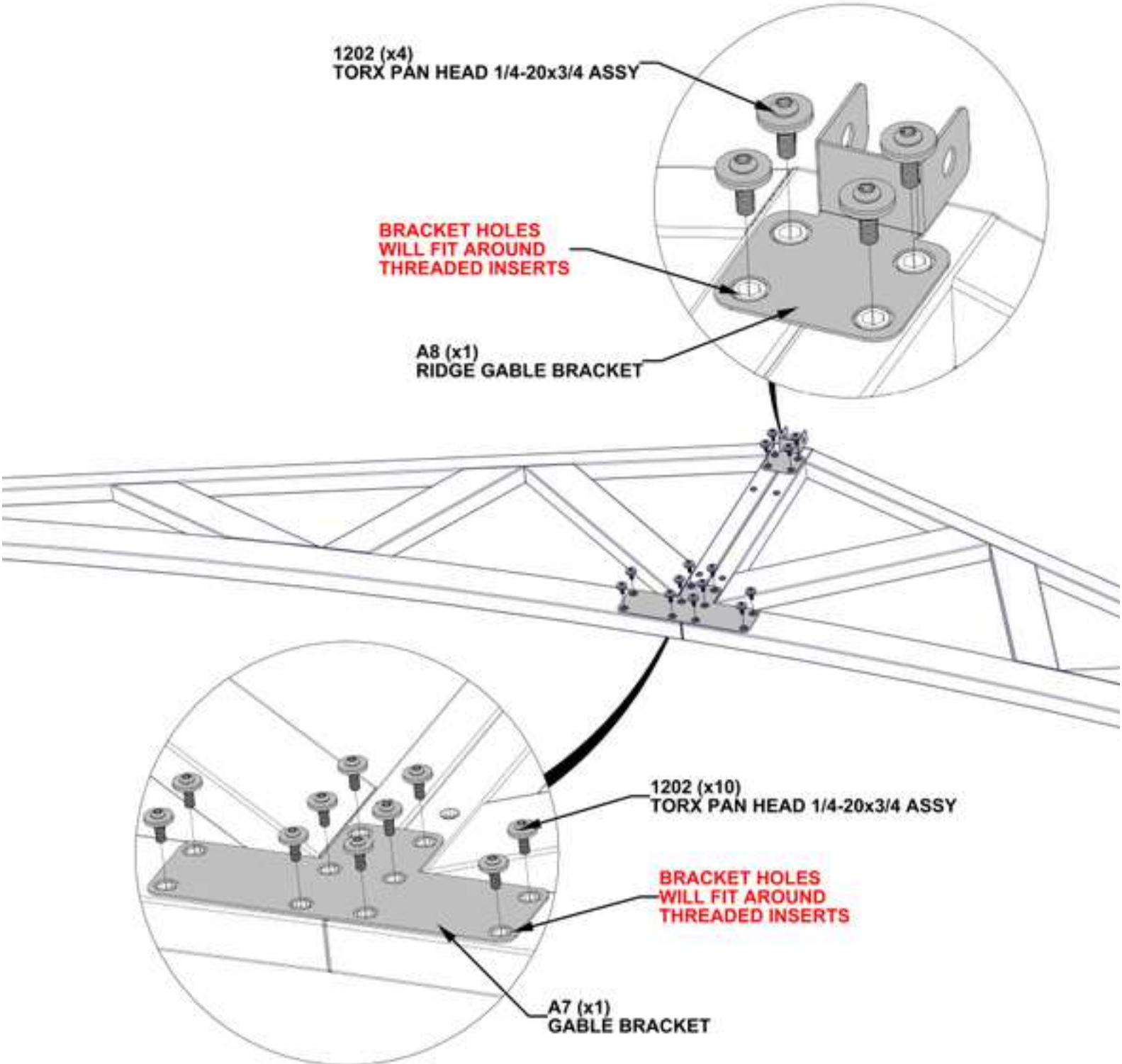

STEP 1C - GABLE ARCH ASSEMBLY

QTY	PART NUMBER	DESCRIPTION
14	H101202	TORX PAN HEAD 1/4-20x3/4 ASSY



G8 GABLE BRACKET - A4M05362
(x1) 1/16"x10 11/16"x21 15/16" (2x272x557)

- WITH AT LEAST TWO PEOPLE, FLIP GABLE ARCH ASSEMBLY OVER.
- MAKE SURE CENTER OF ARCH IS PROPERLY SUPPORTED.

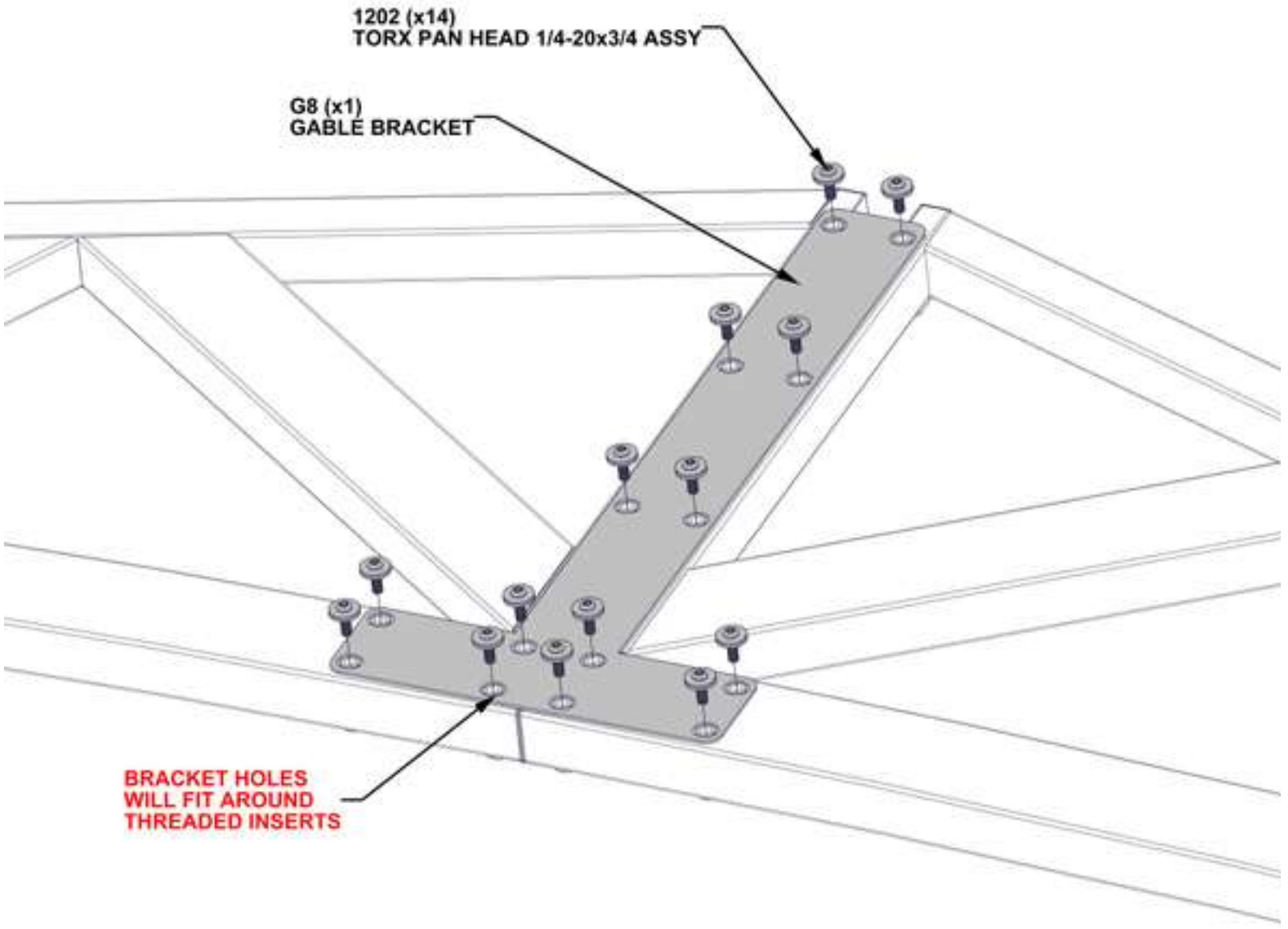

STEP 2 - POST ASSEMBLY

QTY	PART NUMBER	DESCRIPTION
2	H101202	TORX PAN HEAD 1/4-20x3/4 ASSY

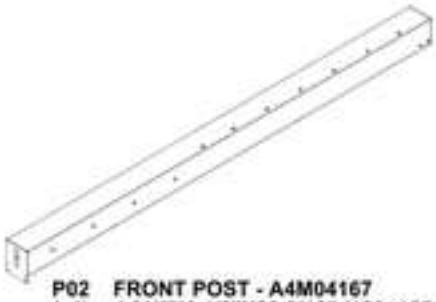

P02 FRONT POST - A4M04167
(x1) 4 3/4"X6 1/8"X89 9/16" (120x155x2275)



J4 GABLE POST BRACKET - A4M04172
(x1) 1"x1 7/16"x2 7/8" (25x37.2x73)

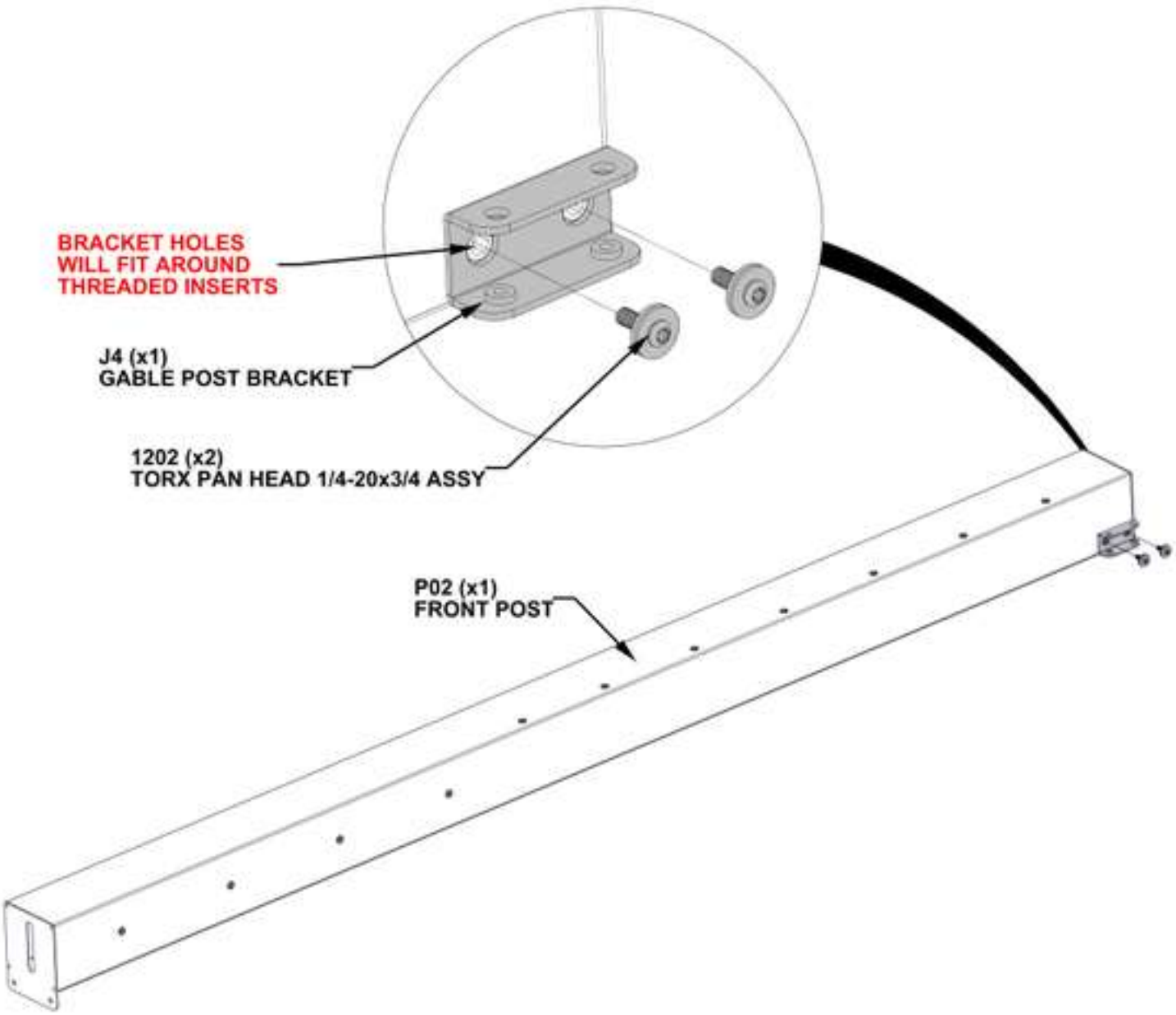

STEP 3A - FRAME ASSEMBLY

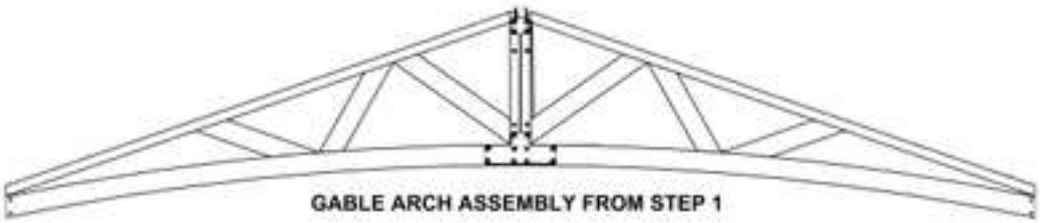

GABLE ARCH ASSEMBLY FROM STEP 1

- SLIDE POST ASSEMBLY FROM STEP 2
  INTO THE ARCH ASSEMBLY FROM STEP 1.

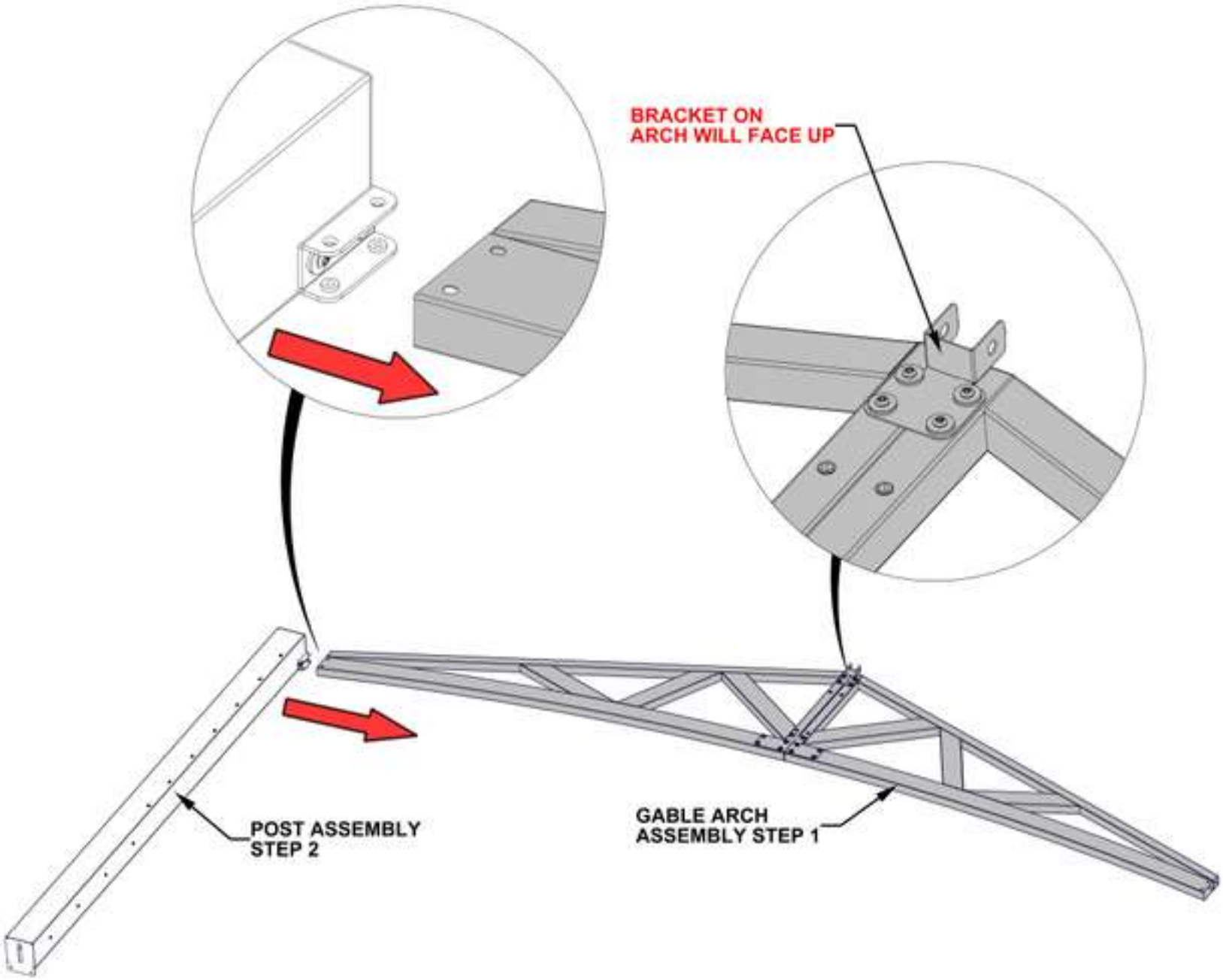

STEP 3B - FRAME ASSEMBLY

QTY	PART NUMBER	DESCRIPTION
2	H101202	TORX PAN HEAD 1/4-20x3/4 ASSY

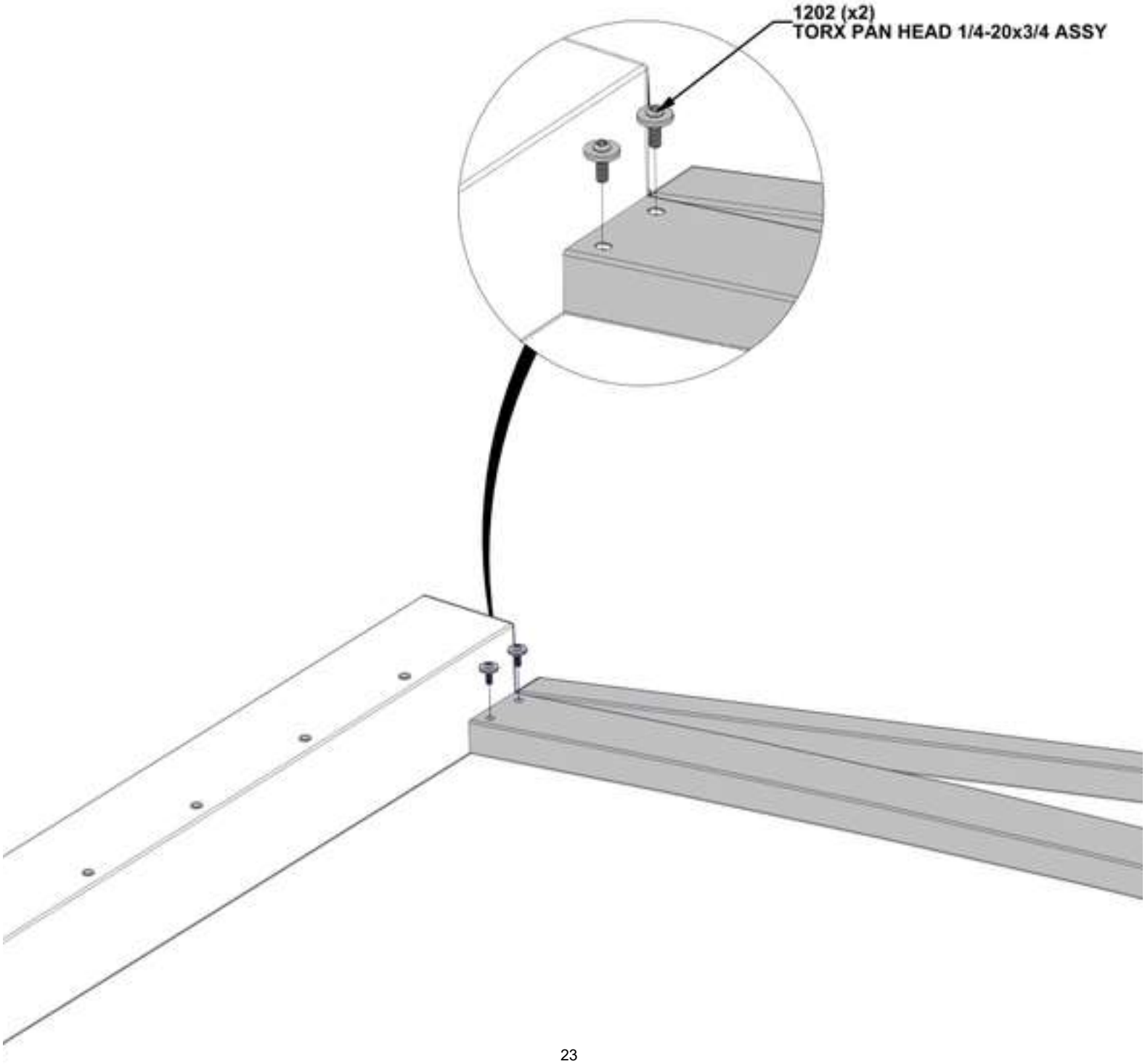

STEP 4 - POST ASSEMBLY

QTY	PART NUMBER	DESCRIPTION
2	H101202	TORX PAN HEAD 1/4-20x3/4 ASSY

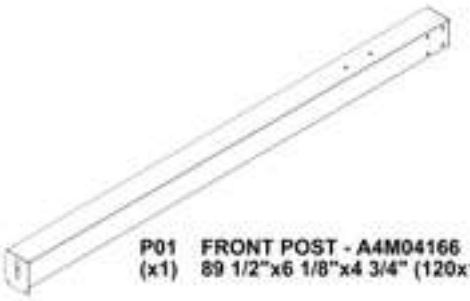

P01 FRONT POST - A4M04166
(x1) 89 1/2"x6 1/8"x4 3/4" (120x155x2275)



J4 GABLE POST BRACKET - A4M04172
(x1) 1"x1 7/16"x2 7/8" (25x37.2x73)

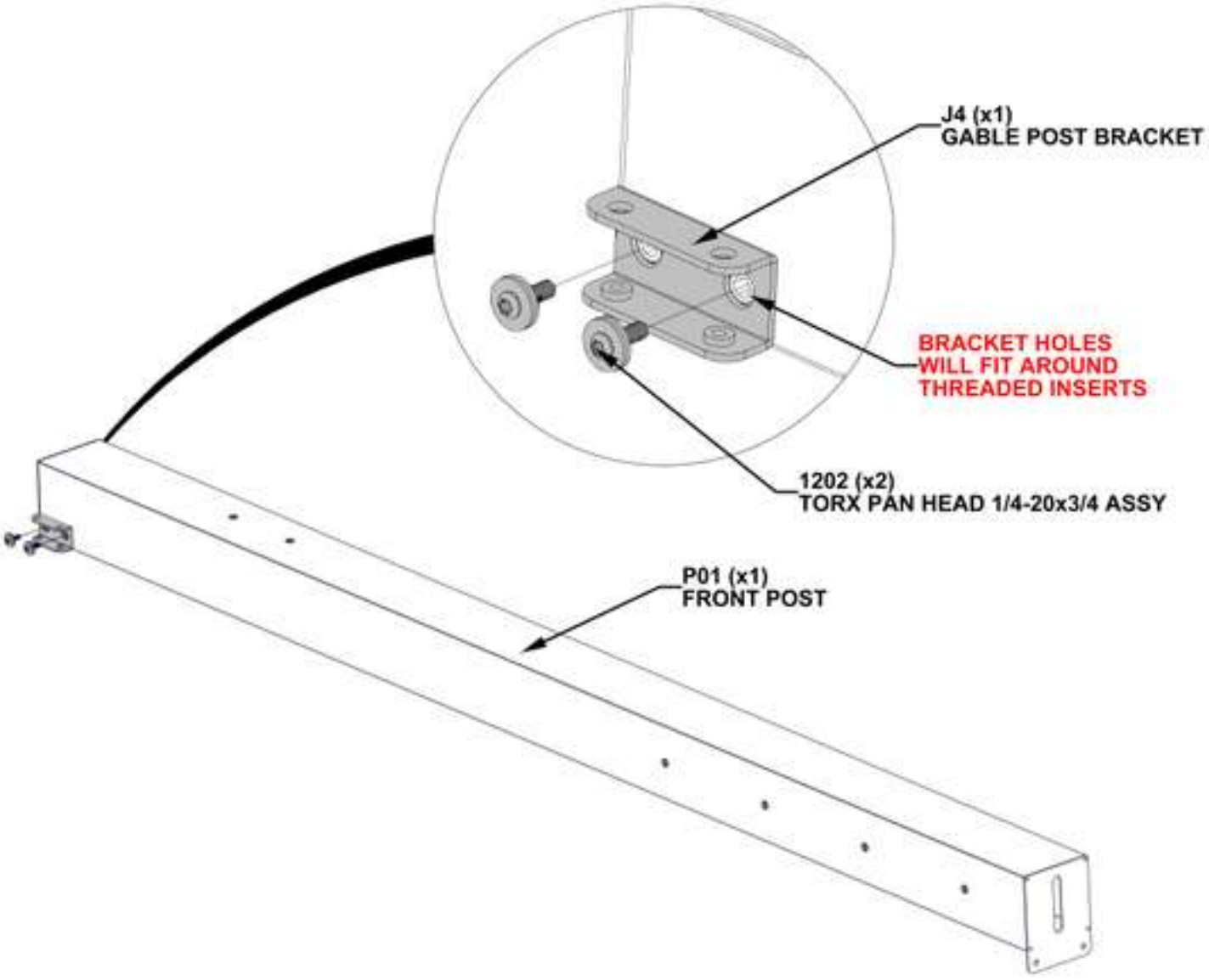

STEP 5A - FRAME ASSEMBLY

- SLIDE POST ASSEMBLY FROM STEP 4
  INTO THE ARCH ASSEMBLY FROM STEPS 1 - 3.

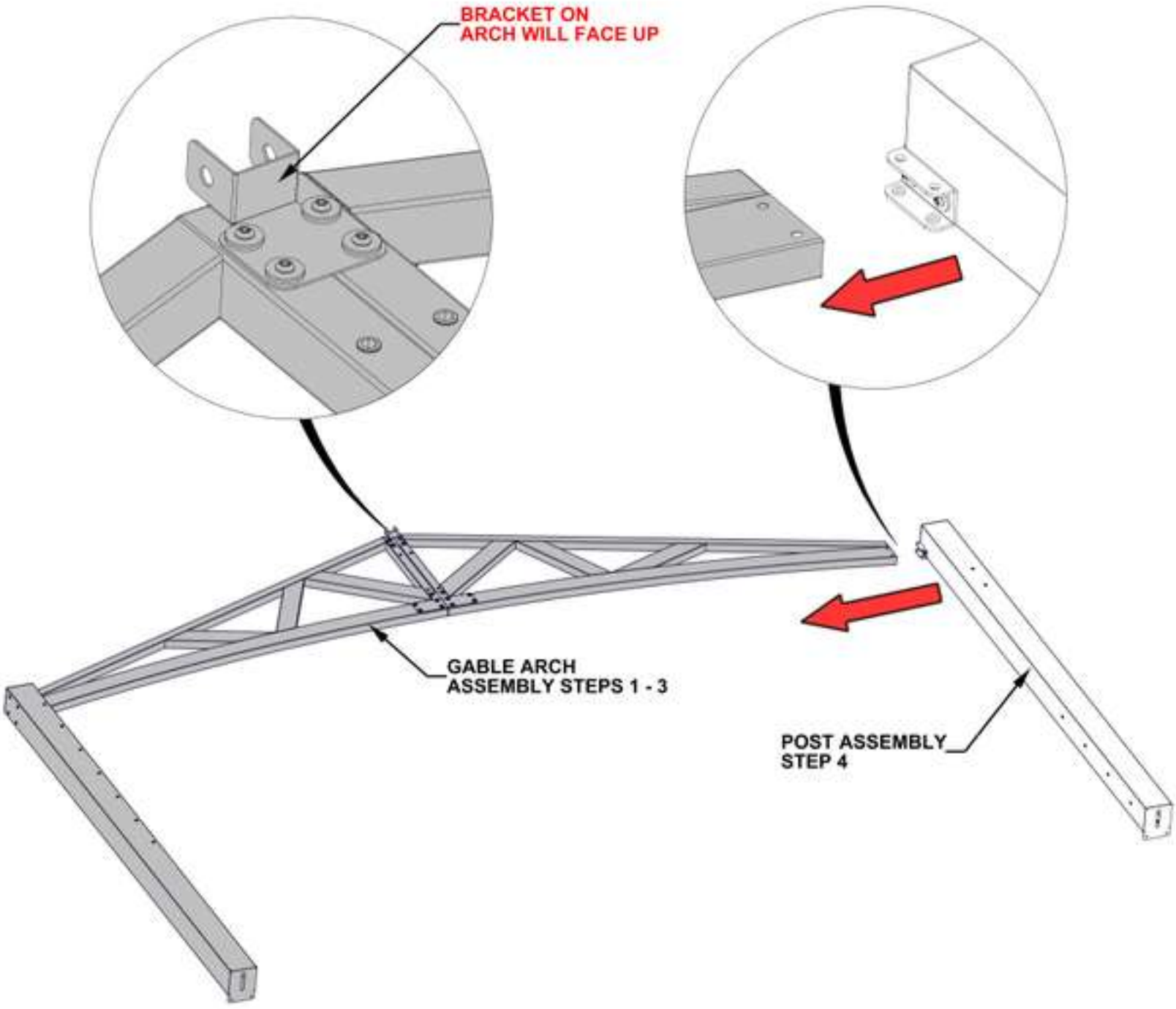

STEP 5B - FRAME ASSEMBLY

QTY	PART NUMBER	DESCRIPTION
2	H101202	TORX PAN HEAD 1/4-20x3/4 ASSY

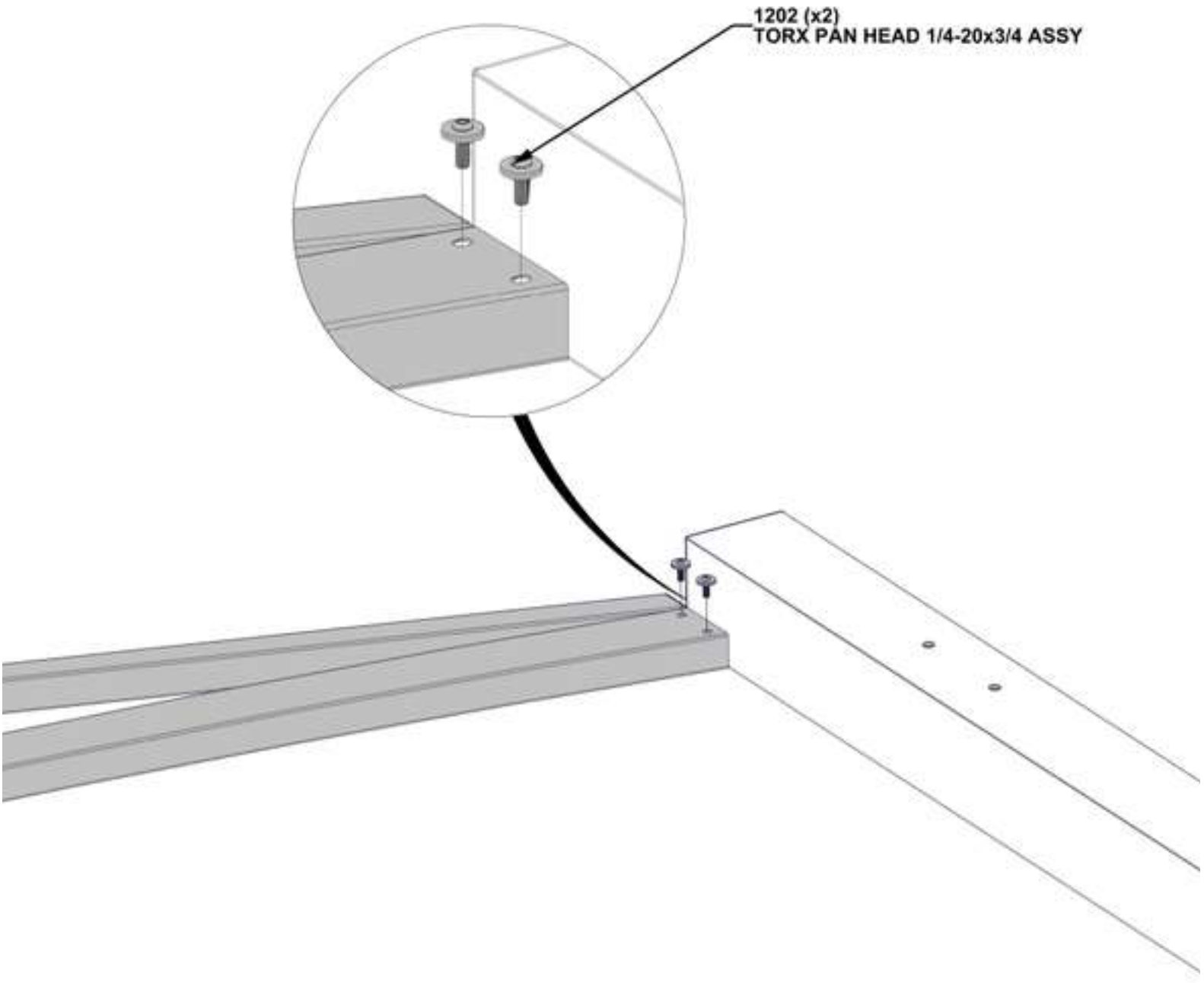

STEP 6 - FRAME ASSEMBLY



J7 (x2) RAFTER BRACKET - A4M03802
3 5/8"x2 3/16"x2" (50x55x92)

QTY	PART NUMBER	DESCRIPTION
2	H101202	TORX PAN HEAD 1/4-20x3/4 ASSY

- ATTACH RAFTER BRACKET TO THE TOP OF EACH POST.

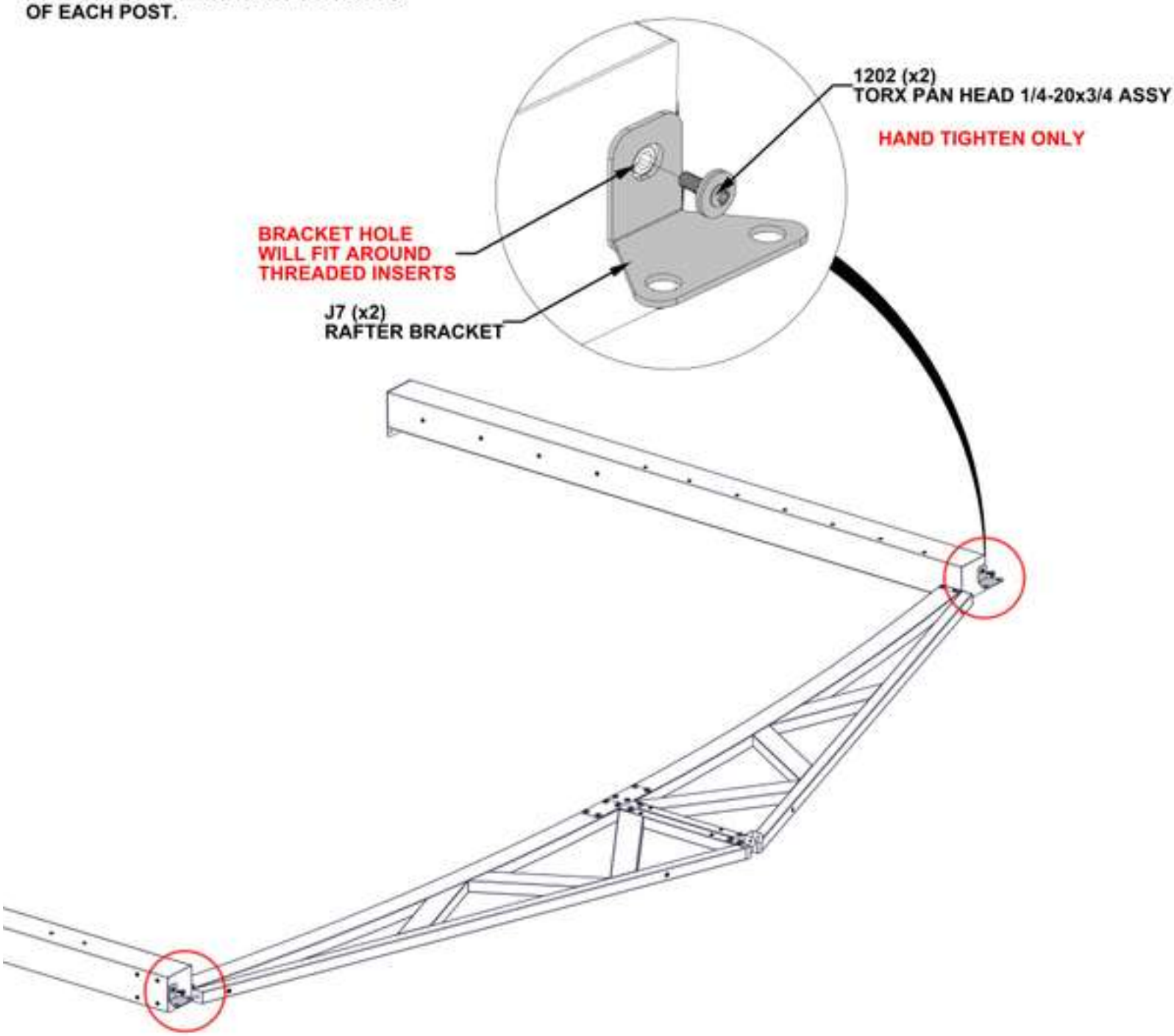

STEP 7 - FRAME ASSEMBLY

QTY	PART NUMBER	DESCRIPTION
2	H100512	BOLT WH 5/16x4 BLK
2	H101202	TORX PAN HEAD 1/4-20x3/4 ASSY



R02 RAFER ASSEMBLY - A4M04183
(x1) 91 1/2"x4 5/16"x3 1/8" (80x110x2325)

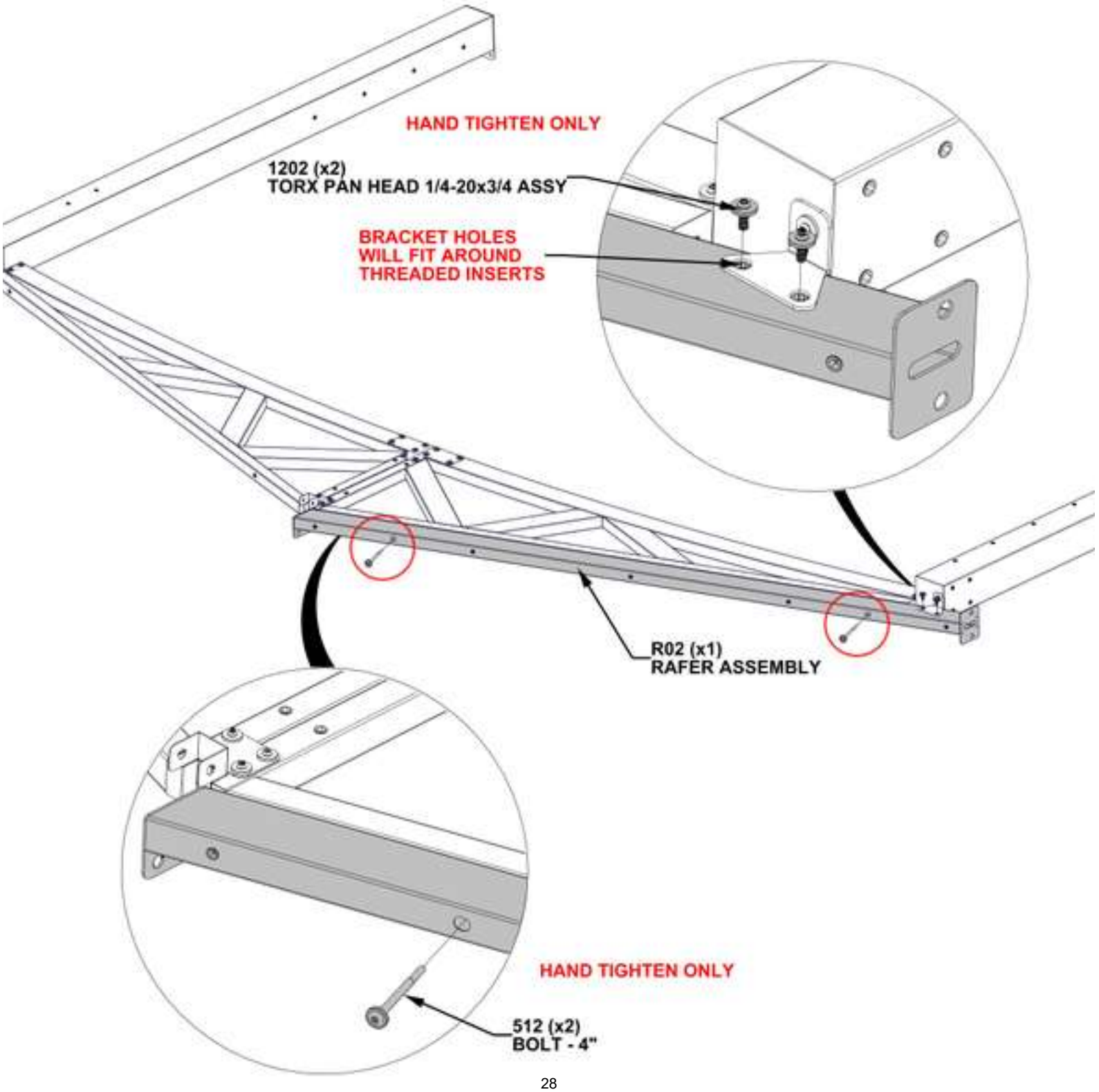

STEP 8 - FRAME ASSEMBLY

QTY	PART NUMBER	DESCRIPTION
2	H100512	BOLT WH 5/16x4 BLK
2	H101202	TORX PAN HEAD 1/4-20x3/4 ASSY



R03 RAFTER ASSEMBLY - A4M04188
(x1) 91 9/16"x4 5/16"x3 1/8" (80x110x2325)

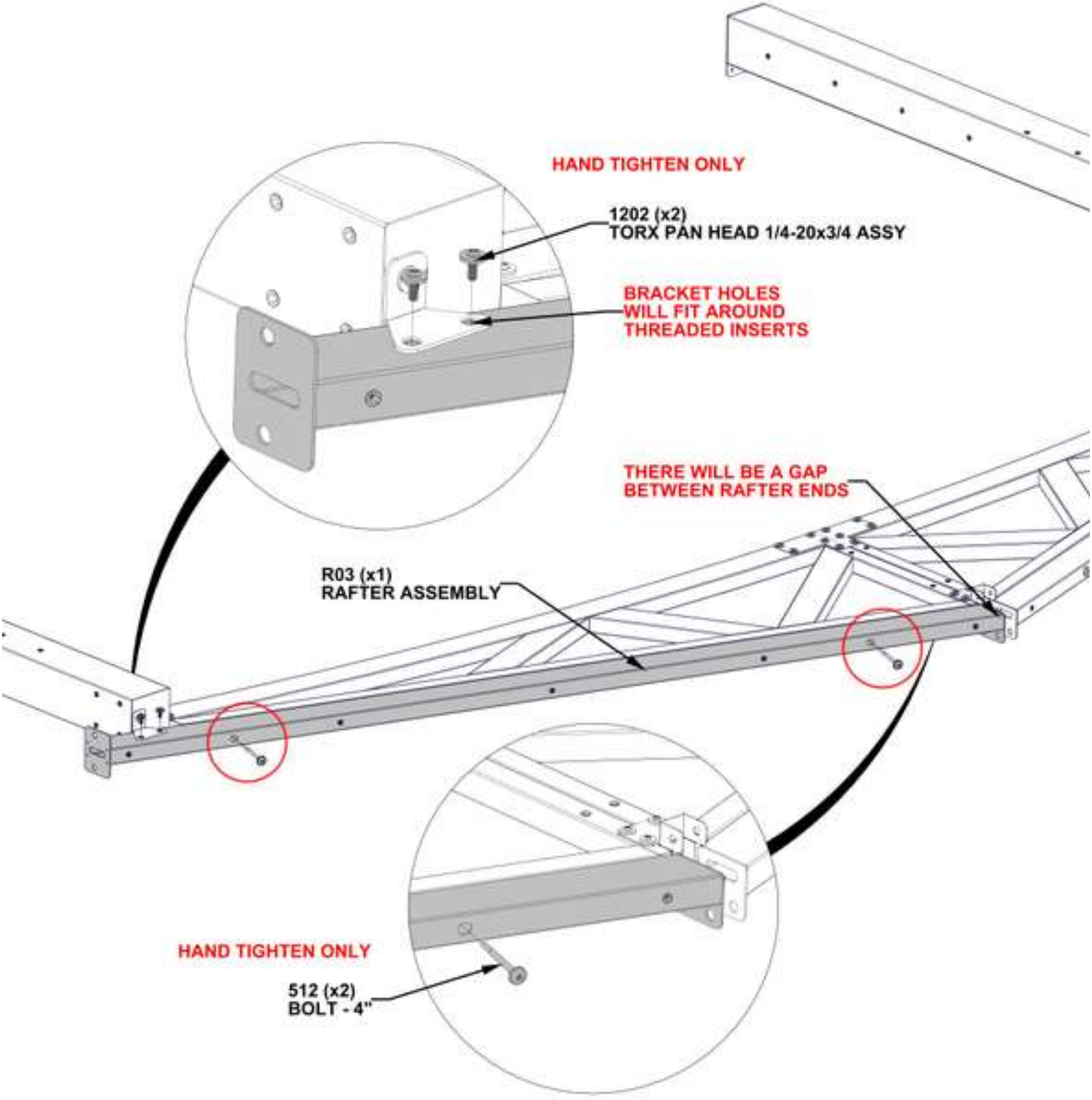

STEP 9A - GABLE ARCH ASSEMBLY

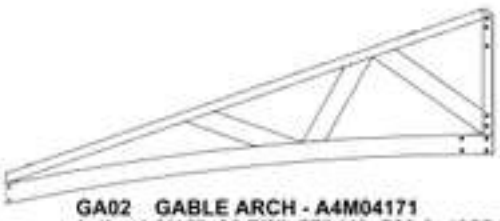

GA02 GABLE ARCH - A4M04171
(x1) 1 9/16"x30 7/8"x77" (40x783.6x1955.5)



GA01 GABLE ARCH - A4M04170
(x1) 1 9/16"x30 7/8"x77" (40x783.6x1955.5)

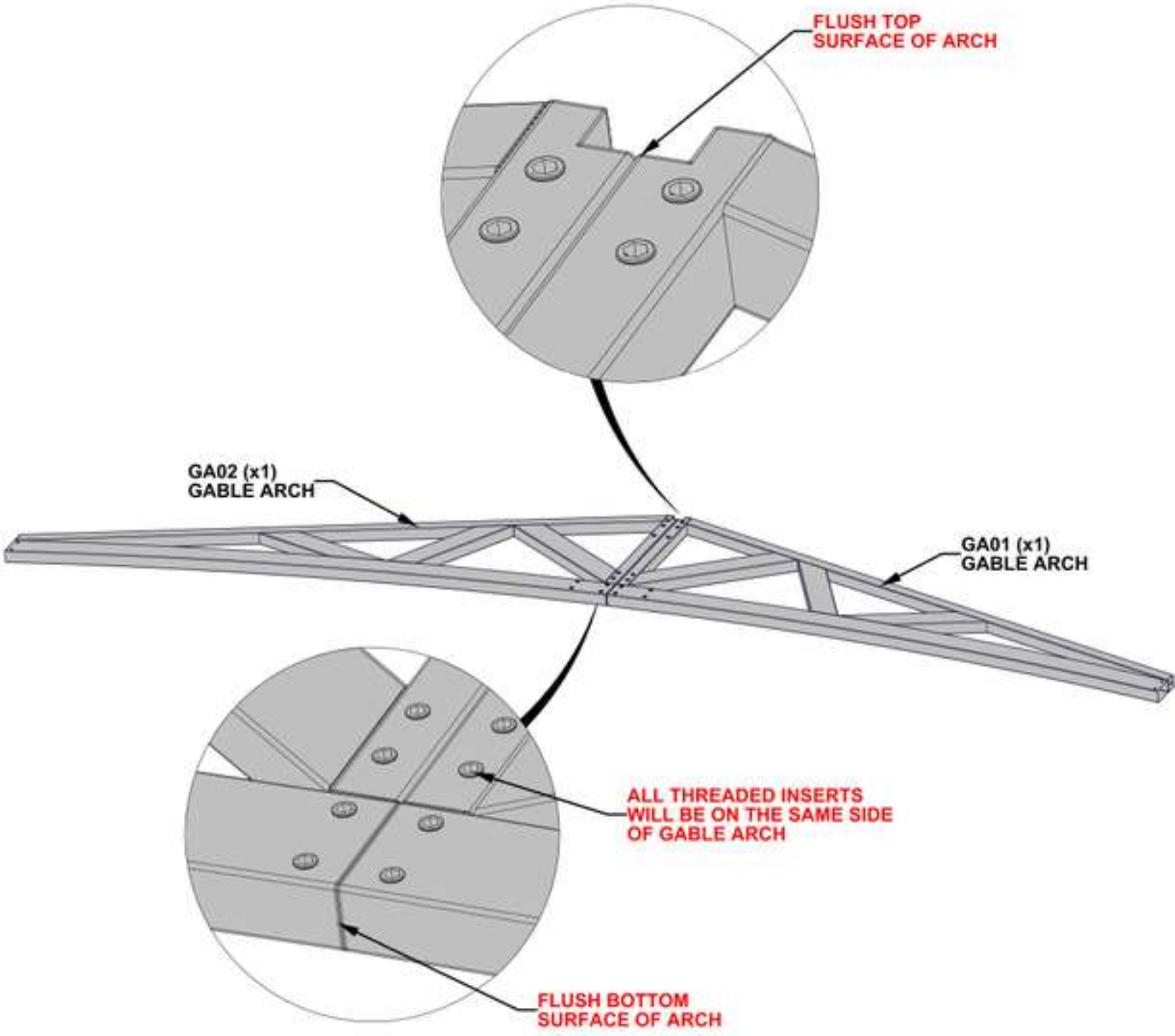

STEP 9B - GABLE ARCH ASSEMBLY

QTY	PART NUMBER	DESCRIPTION
14	H101202	TORX PAN HEAD 1/4-20x3/4 ASSY

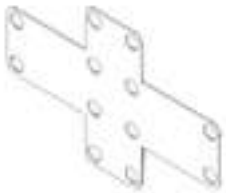

A4 GABLE BRACKET - A4M04196
(x1) 1/16"x6 3/4"x10 11/16" (2x172x272)



A8 RIDGE GABLE BRACKET - A4M04185
(x1) 1 1/4"x2 13/16"x4 1/8" (31.5x72x105)

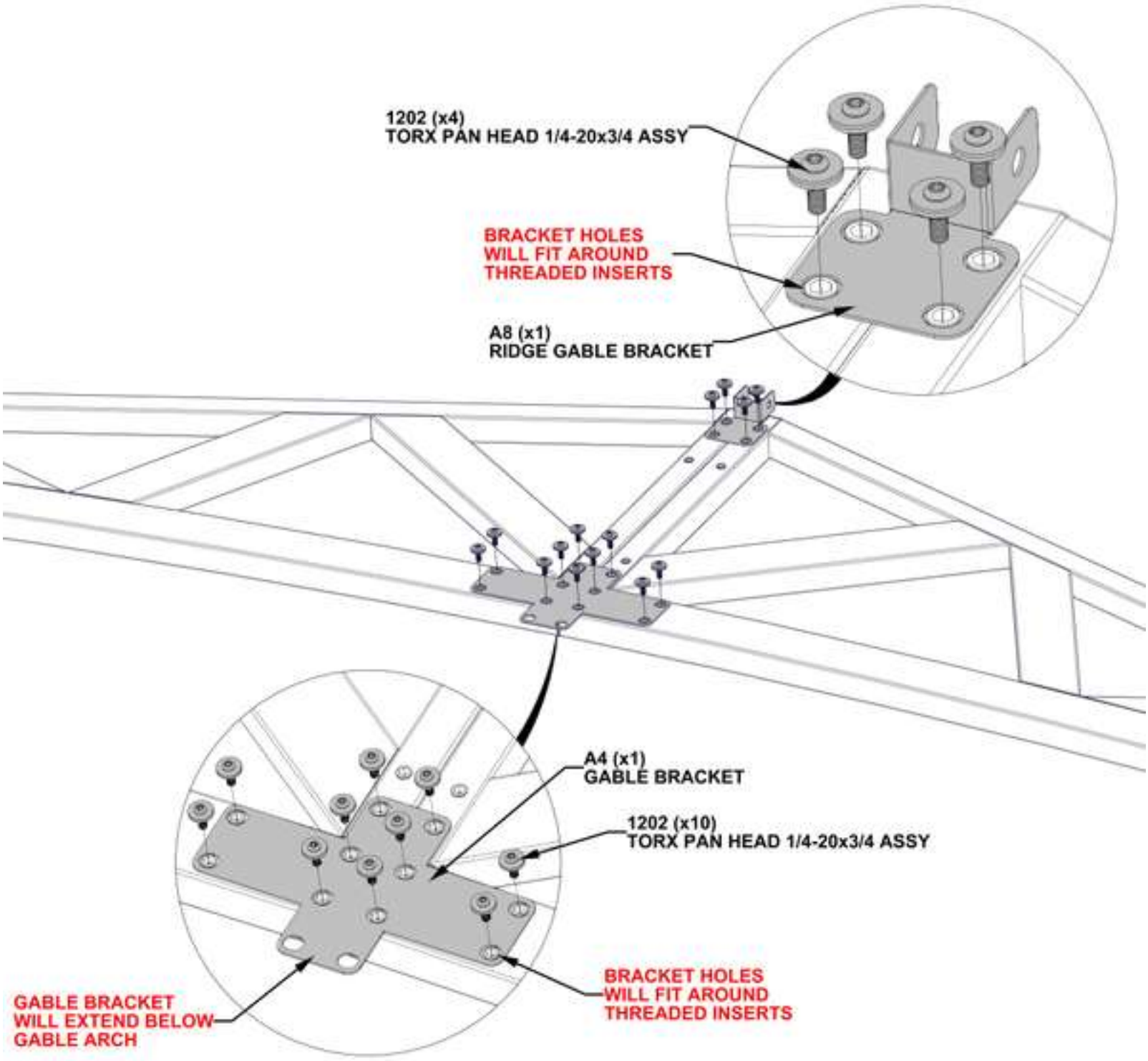

STEP 9C - GABLE ARCH ASSEMBLY

QTY	PART NUMBER	DESCRIPTION
14	H101202	TORX PAN HEAD 1/4-20x3/4 ASSY



G8 GABLE BRACKET - A4M05362
(x1) 1/16"x10 11/16"x21 15/16" (2x272x557)

- WITH AT LEAST TWO PEOPLE, FLIP GABLE ARCH ASSEMBLY OVER.
- MAKE SURE CENTER OF ARCH IS PROPERLY SUPPORTED.

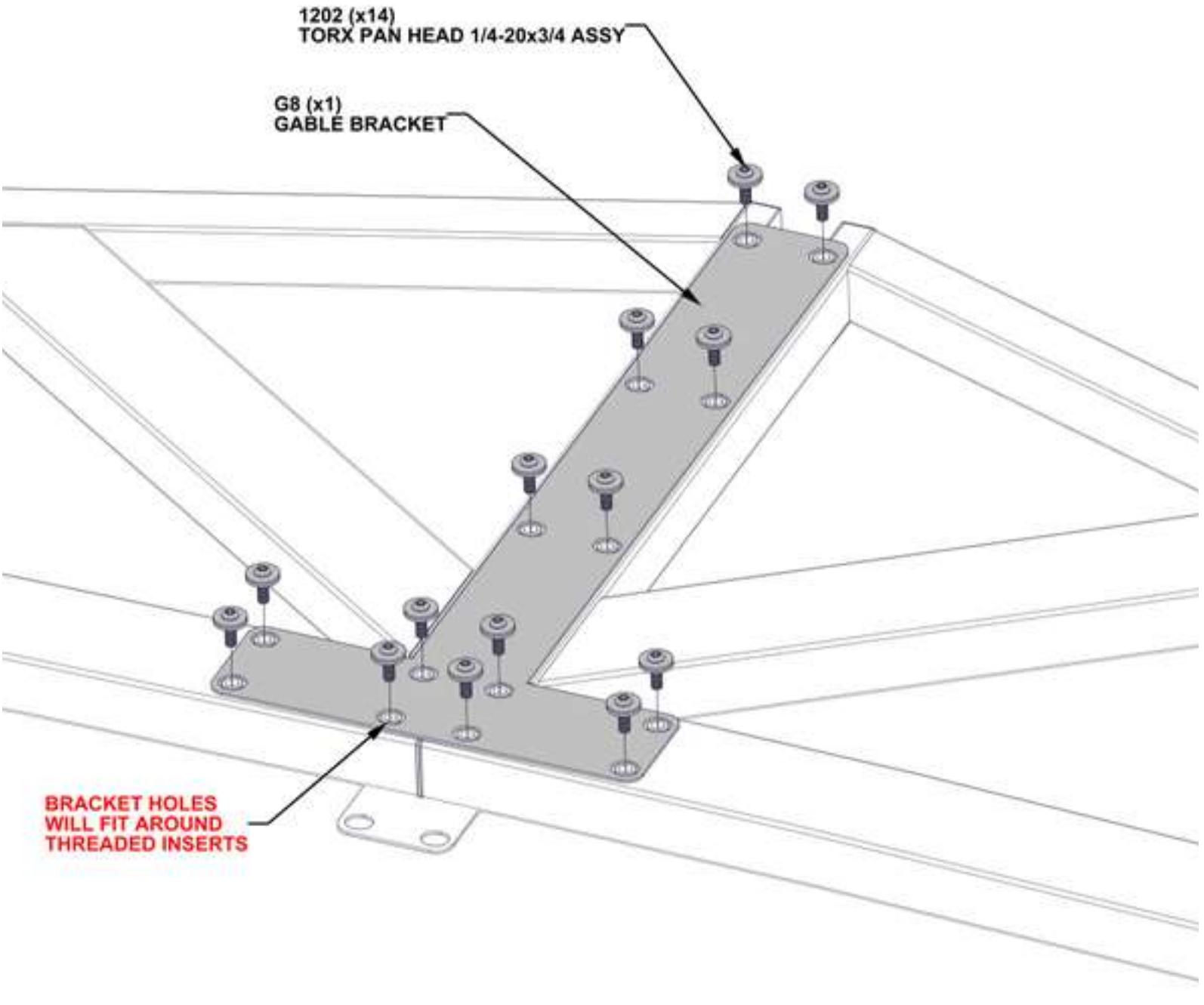

STEP 10 - POST ASSEMBLY

QTY	PART NUMBER	DESCRIPTION
2	H101202	TORX PAN HEAD 1/4-20x3/4 ASSY

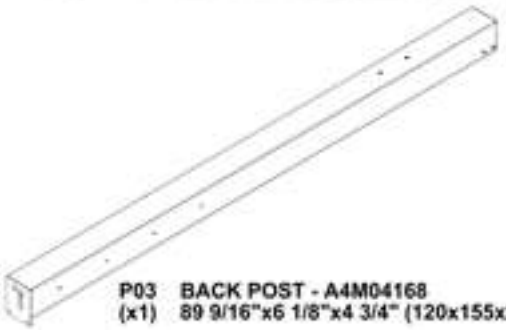

P03 BACK POST - A4M04168
(x1) 89 9/16"x6 1/8"x4 3/4" (120x155x2275)



J4 GABLE POST BRACKET - A4M04172
(x1) 1"x1 7/16"x2 7/8" (25x37.2x73)

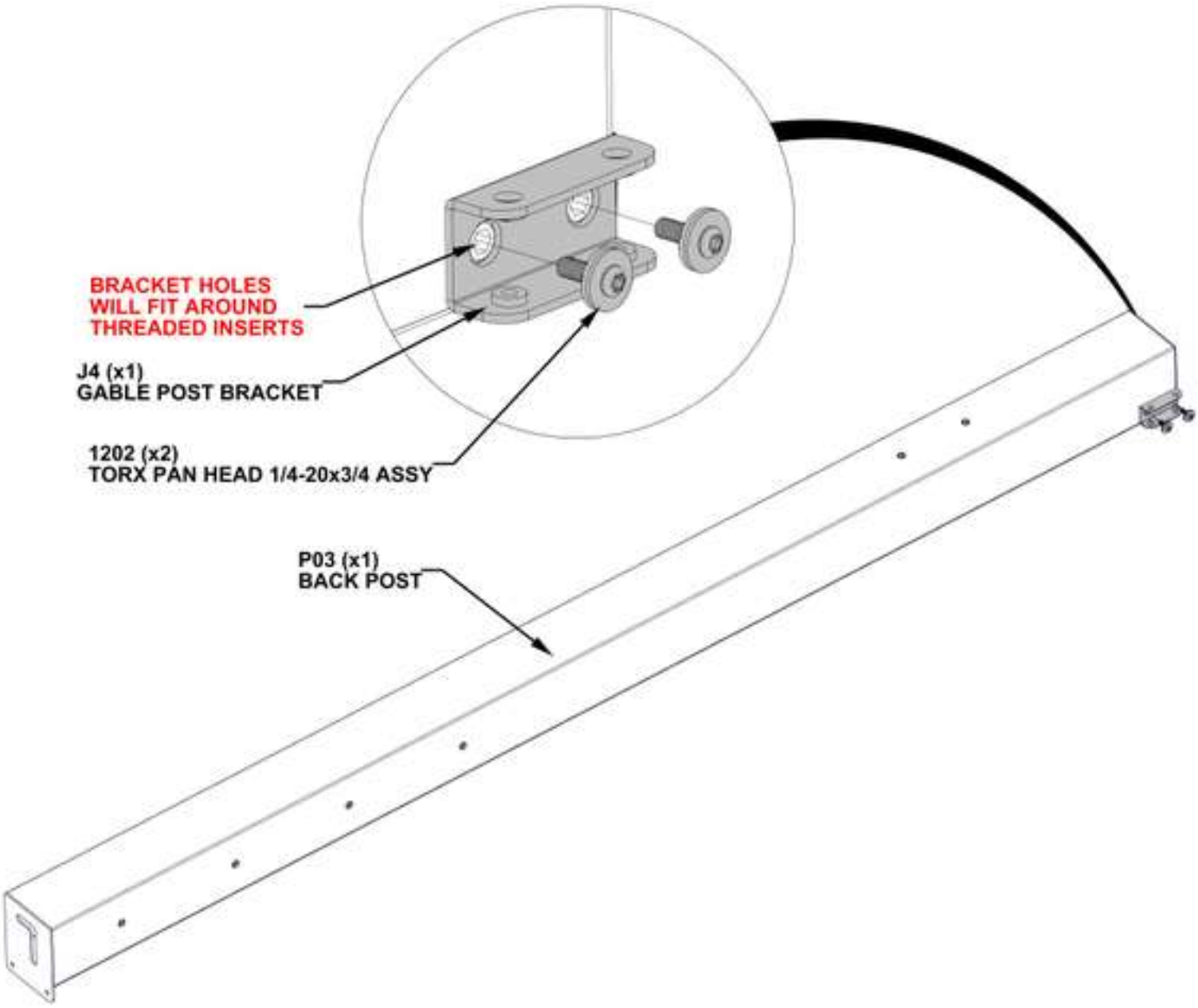

STEP 11A - FRAME ASSEMBLY

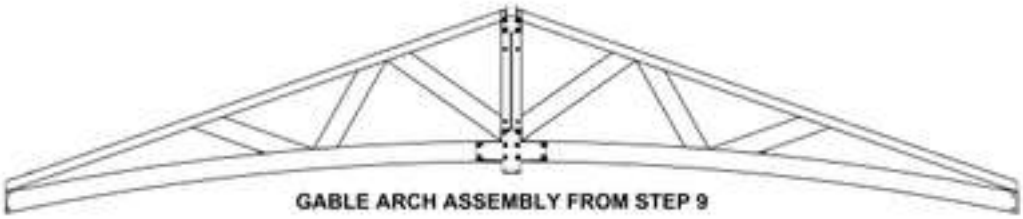

GABLE ARCH ASSEMBLY FROM STEP 9

- SLIDE POST ASSEMBLY FROM STEP 10
  INTO THE ARCH ASSEMBLY FROM STEP 9.

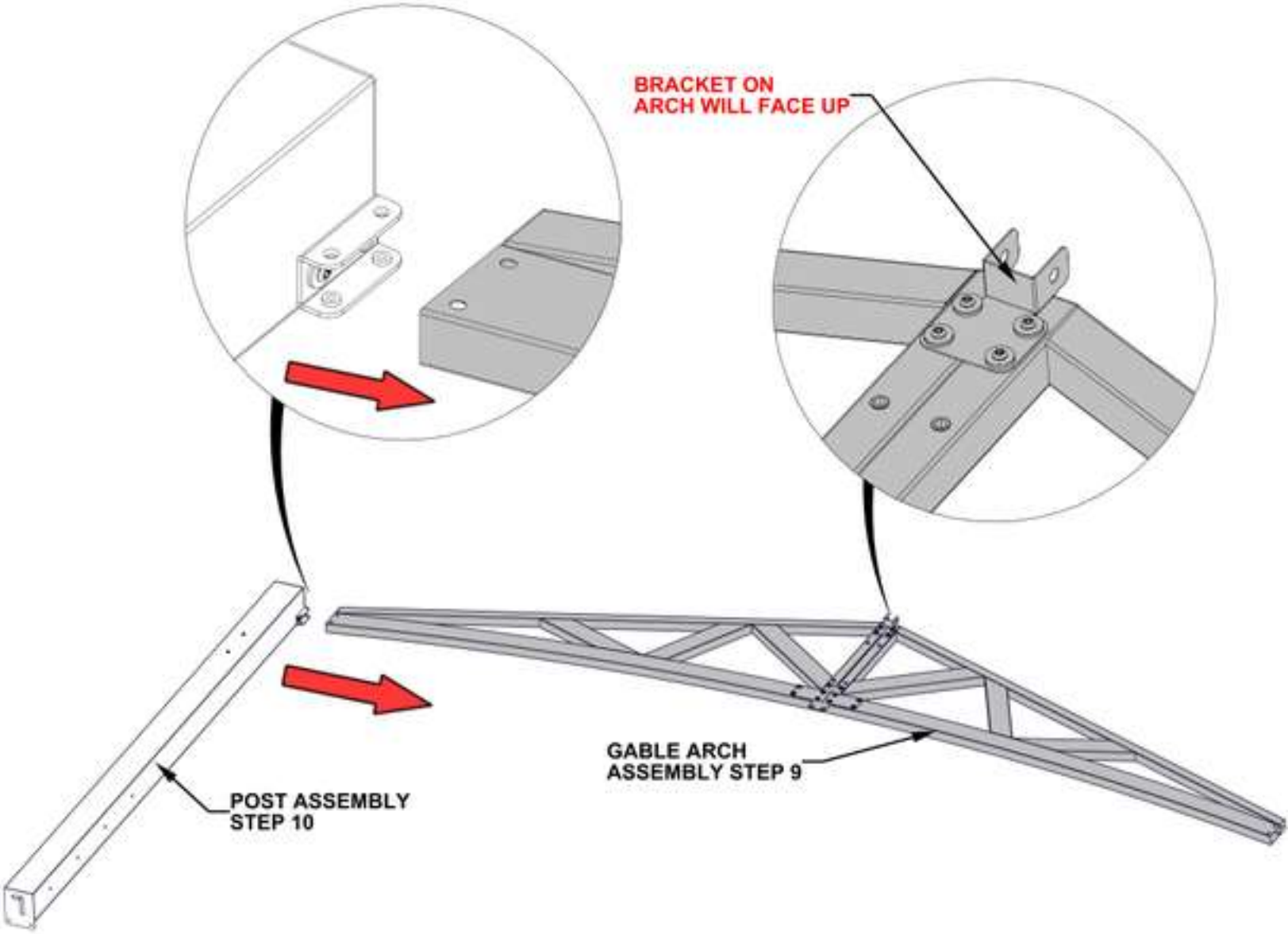

STEP 11B - FRAME ASSEMBLY

QTY	PART NUMBER	DESCRIPTION
2	H101202	TORX PAN HEAD 1/4-20x3/4 ASSY

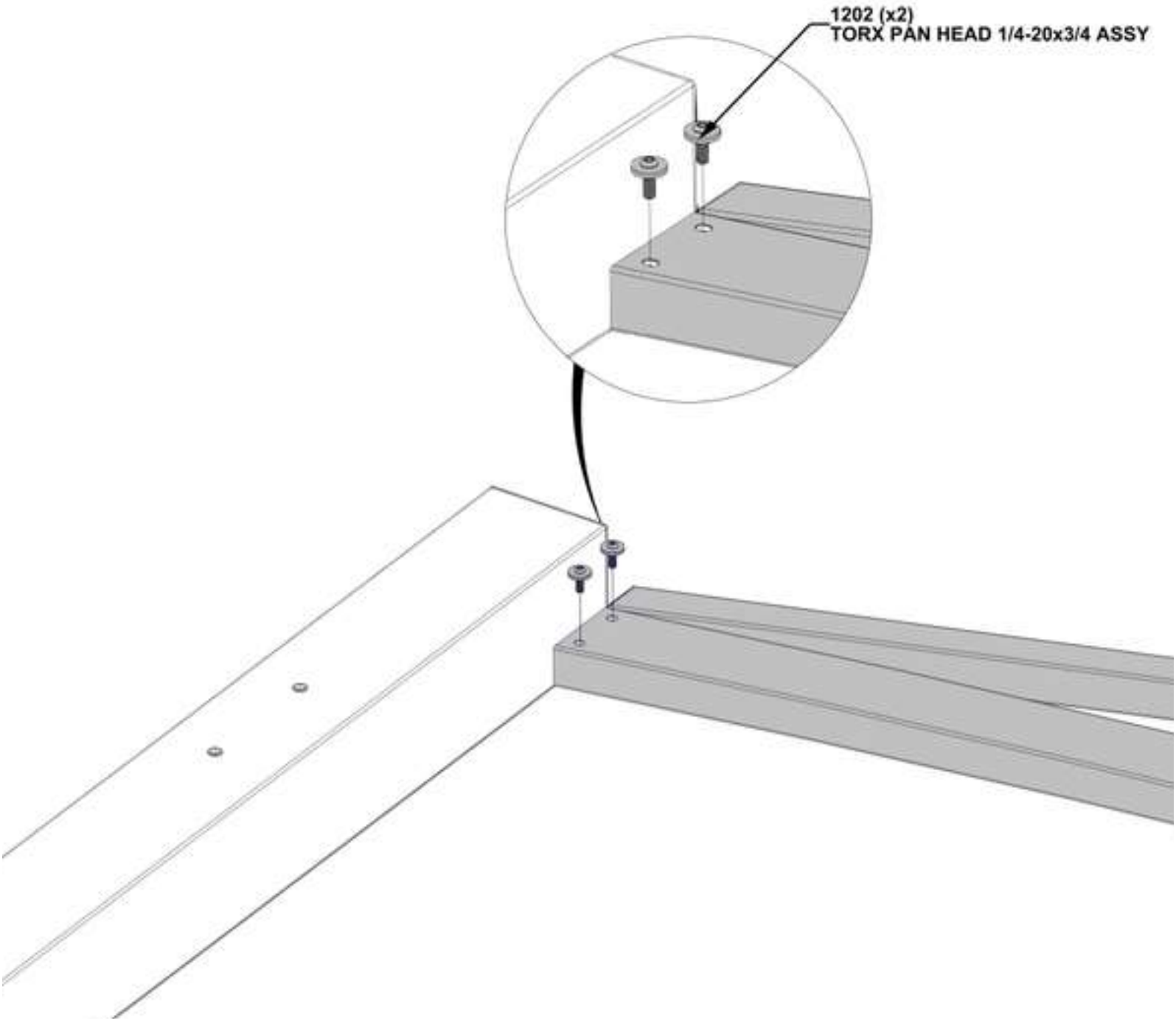

STEP 12 - POST ASSEMBLY

QTY	PART NUMBER	DESCRIPTION
2	H101202	TORX PAN HEAD 1/4-20x3/4 ASSY

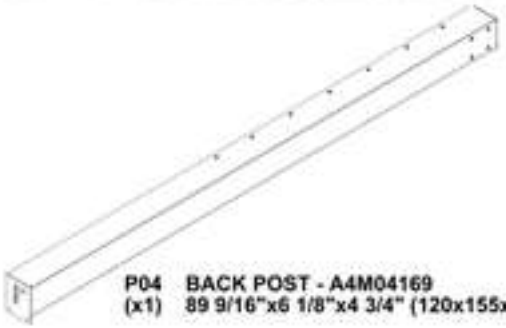

P04 BACK POST - A4M04169
(x1) 89 9/16"x6 1/8"x4 3/4" (120x155x2275)



J4 GABLE POST BRACKET - A4M04172
(x1) 1"x1 7/16"x2 7/8" (25x37.2x73)

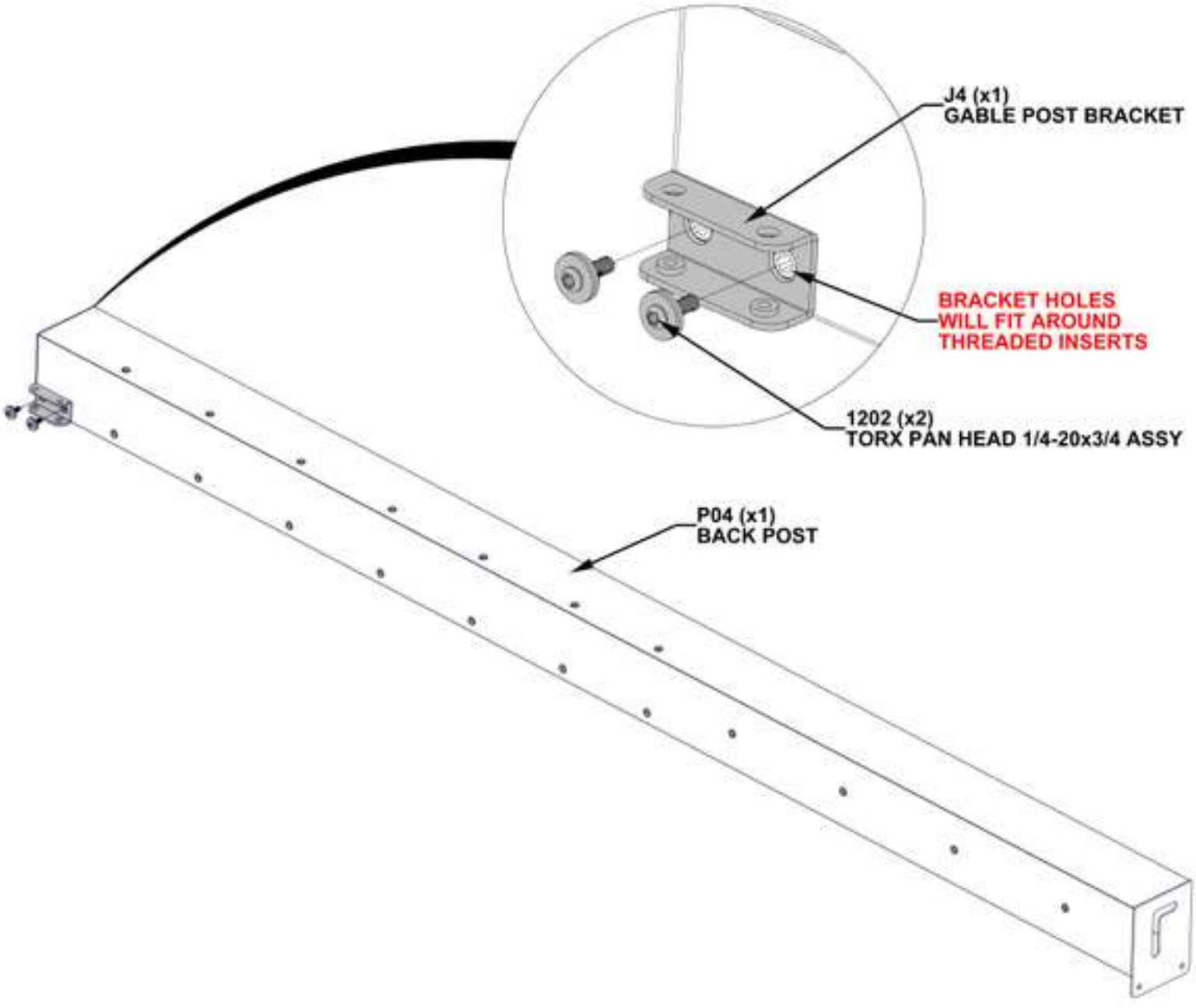

STEP 13A - FRAME ASSEMBLY

- SLIDE POST ASSEMBLY FROM STEP 12
  INTO THE ARCH ASSEMBLY FROM STEPS 9 - 11.

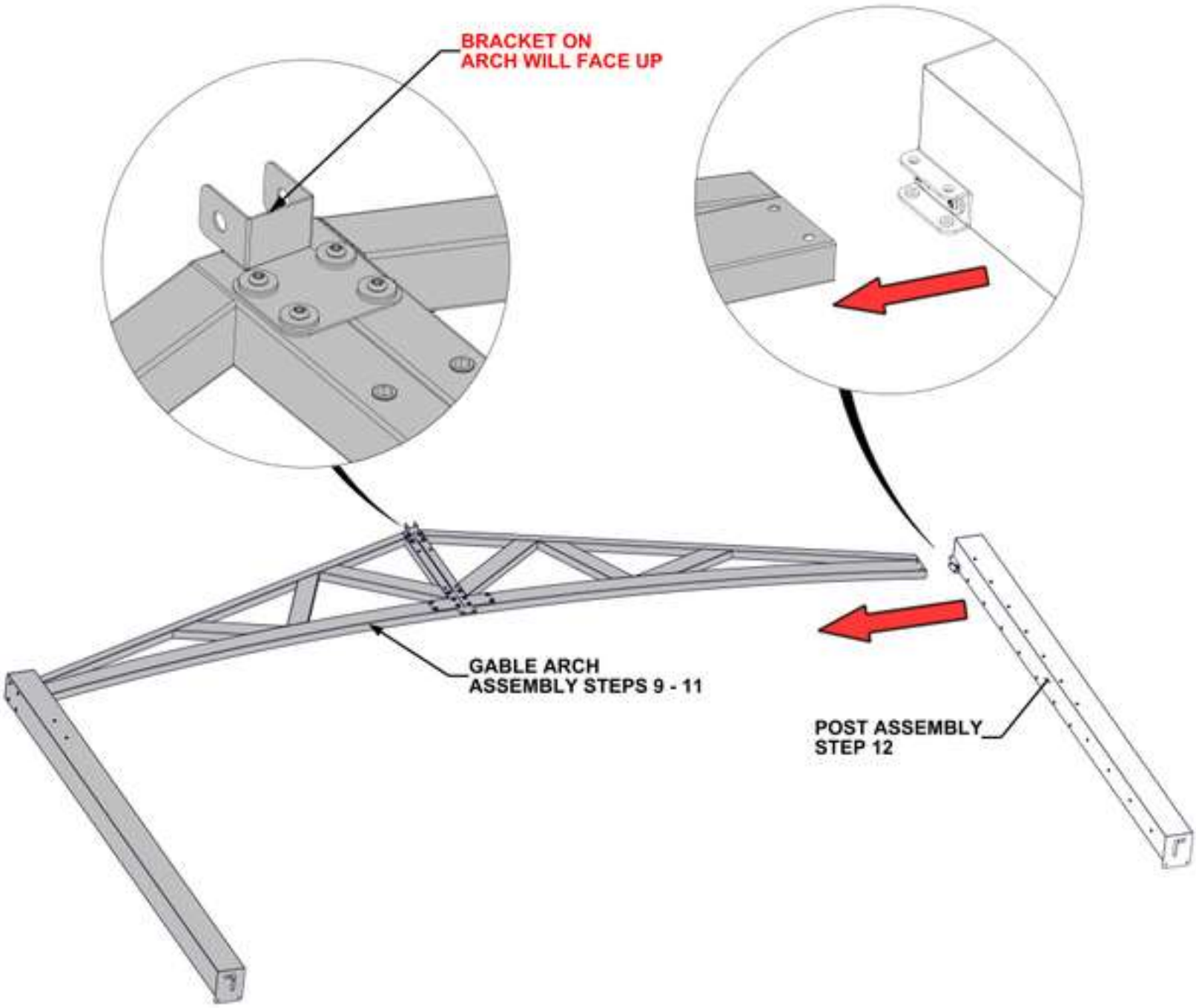

STEP 13B - FRAME ASSEMBLY

QTY	PART NUMBER	DESCRIPTION
2	H101202	TORX PAN HEAD 1/4-20x3/4 ASSY

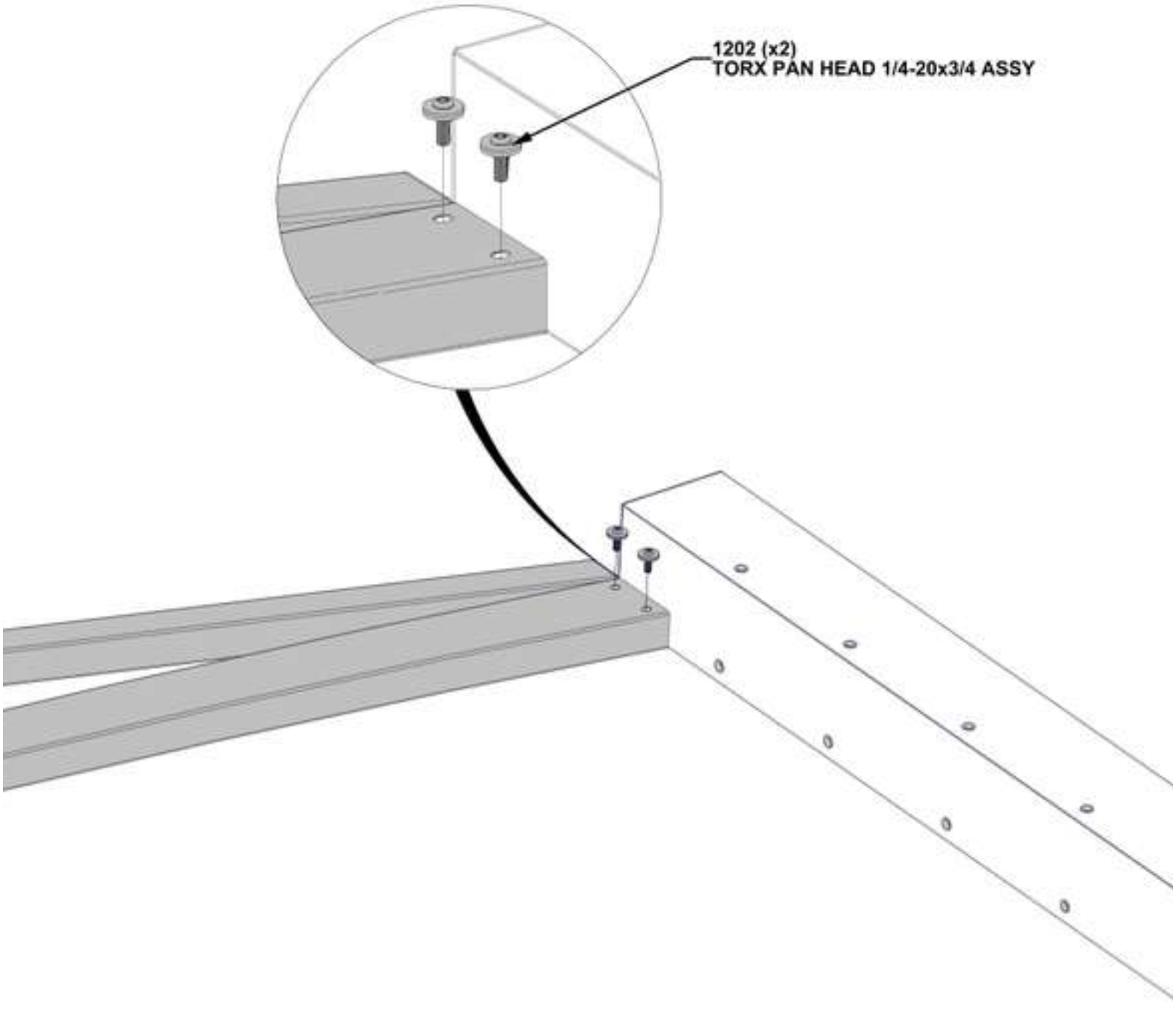

STEP 14 - FRAME ASSEMBLY



J7 RAFTER BRACKET - A4M03802
(x2) 3 5/8"x2 3/16"x2" (50x55x92)

QTY	PART NUMBER	DESCRIPTION
2	H101202	TORX PAN HEAD 1/4-20x3/4 ASSY

- ATTACH RAFTER BRACKET TO THE TOP OF EACH POST.

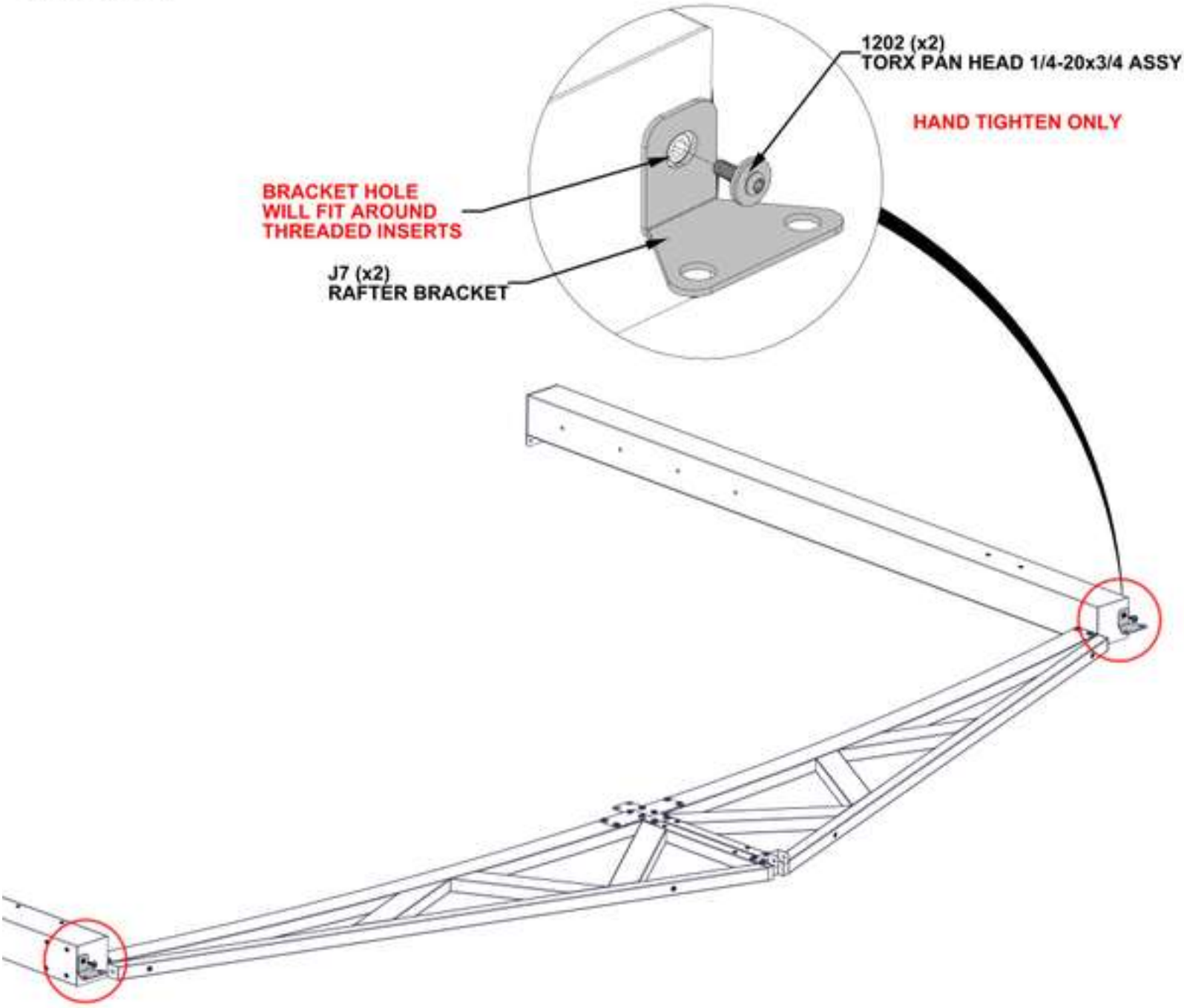

STEP 15 - FRAME ASSEMBLY

QTY	PART NUMBER	DESCRIPTION
2	H100512	BOLT WH 5/16x4 BLK
2	H101202	TORX PAN HEAD 1/4-20x3/4 ASSY



R02 RAFER ASSEMBLY - A4M04183
(x1) 91 1/2"x4 5/16"x3 1/8" (80x110x2325)

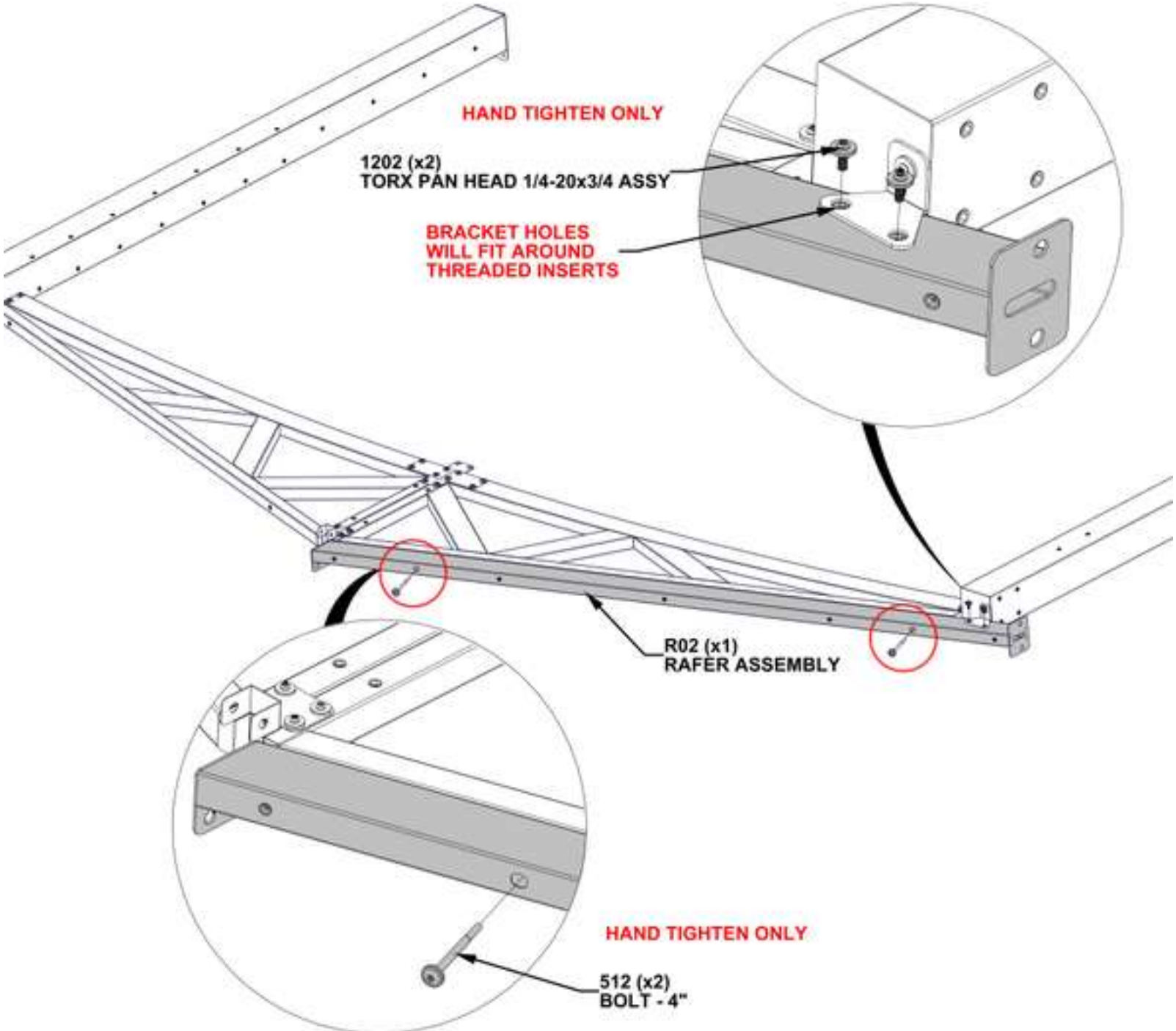

STEP 16 - FRAME ASSEMBLY

QTY	PART NUMBER	DESCRIPTION
2	H100512	BOLT WH 5/16x4 BLK
2	H101202	TORX PAN HEAD 1/4-20x3/4 ASSY



R03 RAFTER ASSEMBLY - A4M04188
(x1) 91 9/16"x4 5/16"x3 1/8" (80x110x2325)

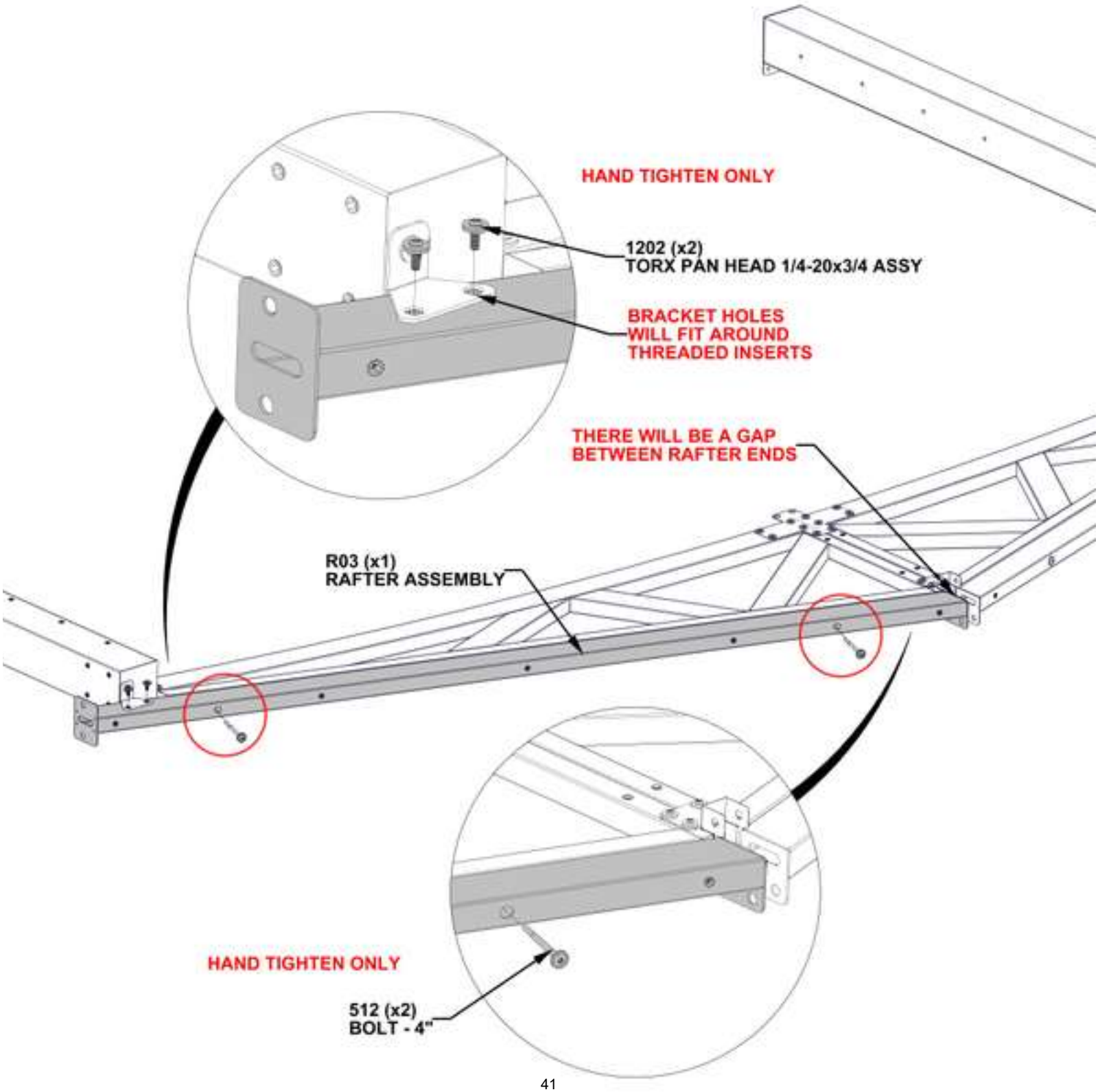

STEP 17 - SIDE BEAM ASSEMBLY

QTY	PART NUMBER	DESCRIPTION
6	H101202	TORX PAN HEAD 1/4-20x3/4 ASSY



B03 SIDE BEAM ASSEMBLY - A4M04187
(x1) 96"x5 1/4"x1 7/16" (36x134x2438)



J5 RAFTER BRACKET - A4M03803
(x3) 3 5/8"x2 11/16"x2 1/16" (52x68x91.5)

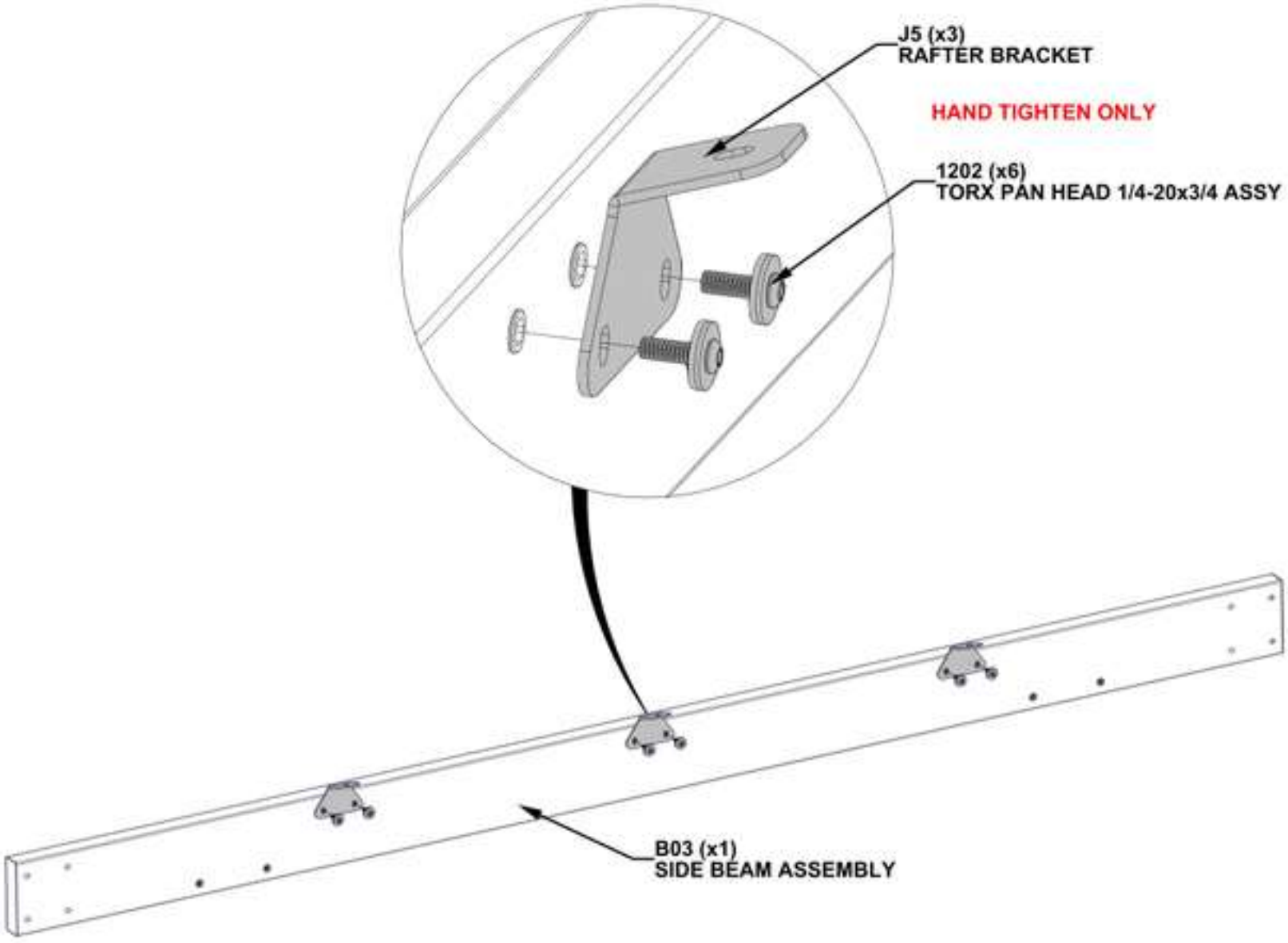

STEP 18 - FRAME ASSEMBLY

QTY	PART NUMBER	DESCRIPTION
8	H101103	TORX SOCKET SCREW 1/4-20



FRONT GABLE ARCH ASSEMBLY FROM STEPS 1 - 8



BACK GABLE ARCH ASSEMBLY FROM STEPS 9 - 16

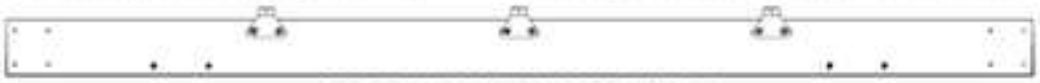

SIDE BEAM ASSEMBLY FROM STEP 17

- WITH AT LEAST THREE OTHER PEOPLE, ATTACH GABLE ARCH ASSEMBLIES WITH SIDE BEAM ASSEMBLY.

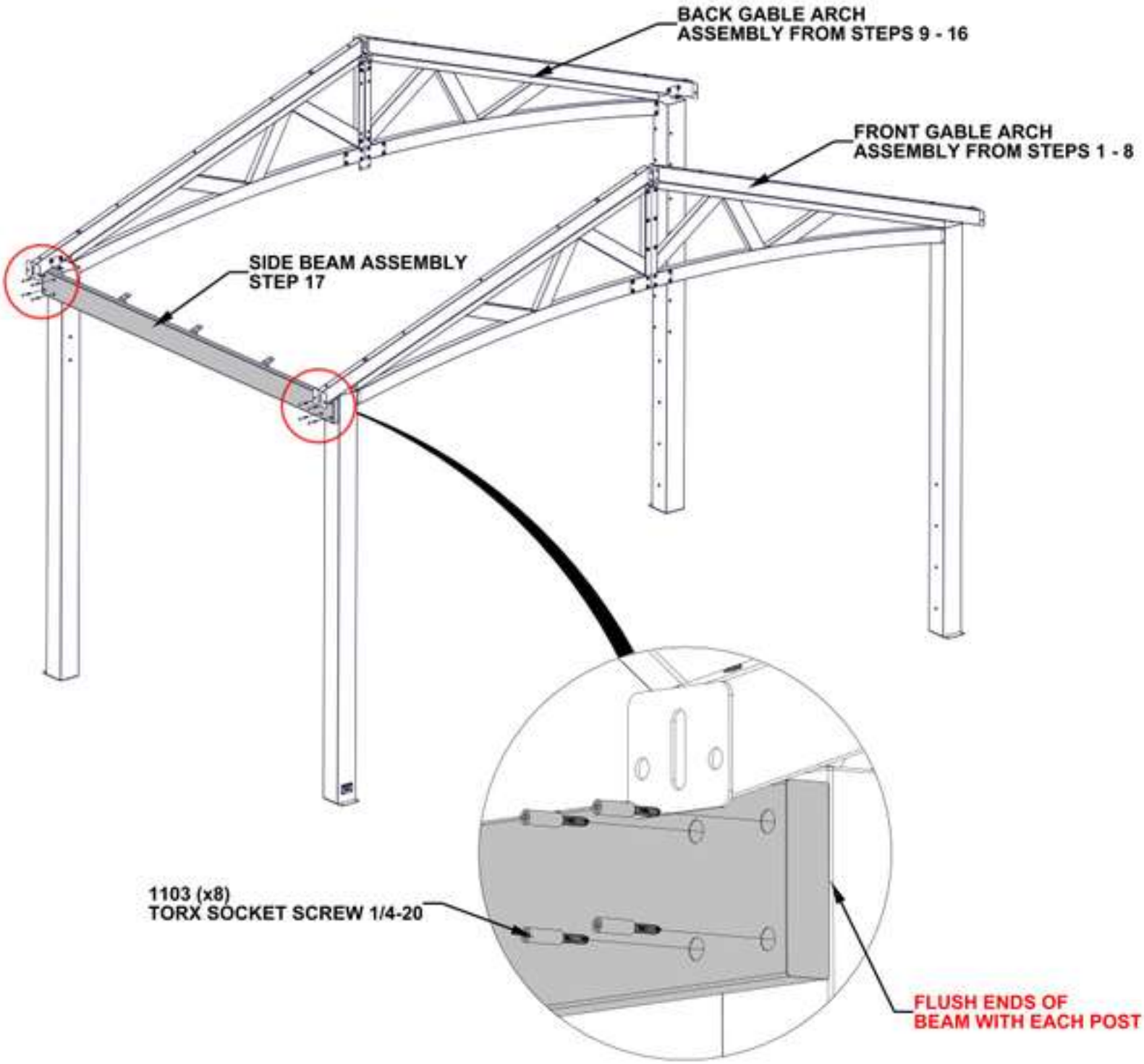

STEP 19 - FRAME ASSEMBLY



C03 CORBEL ASSEMBLY - A4M04198
(x1) 2 3/4"x5 1/4"x22 5/16" (70x134x566)

QTY	PART NUMBER	DESCRIPTION
4	H101202	TORX PAN HEAD 1/4-20x3/4 ASSY

- ATTACH CORBELS TO BEAM AND POST.
- SQUARE AS NEEDED BEFORE TIGHTENING HARDWARE.

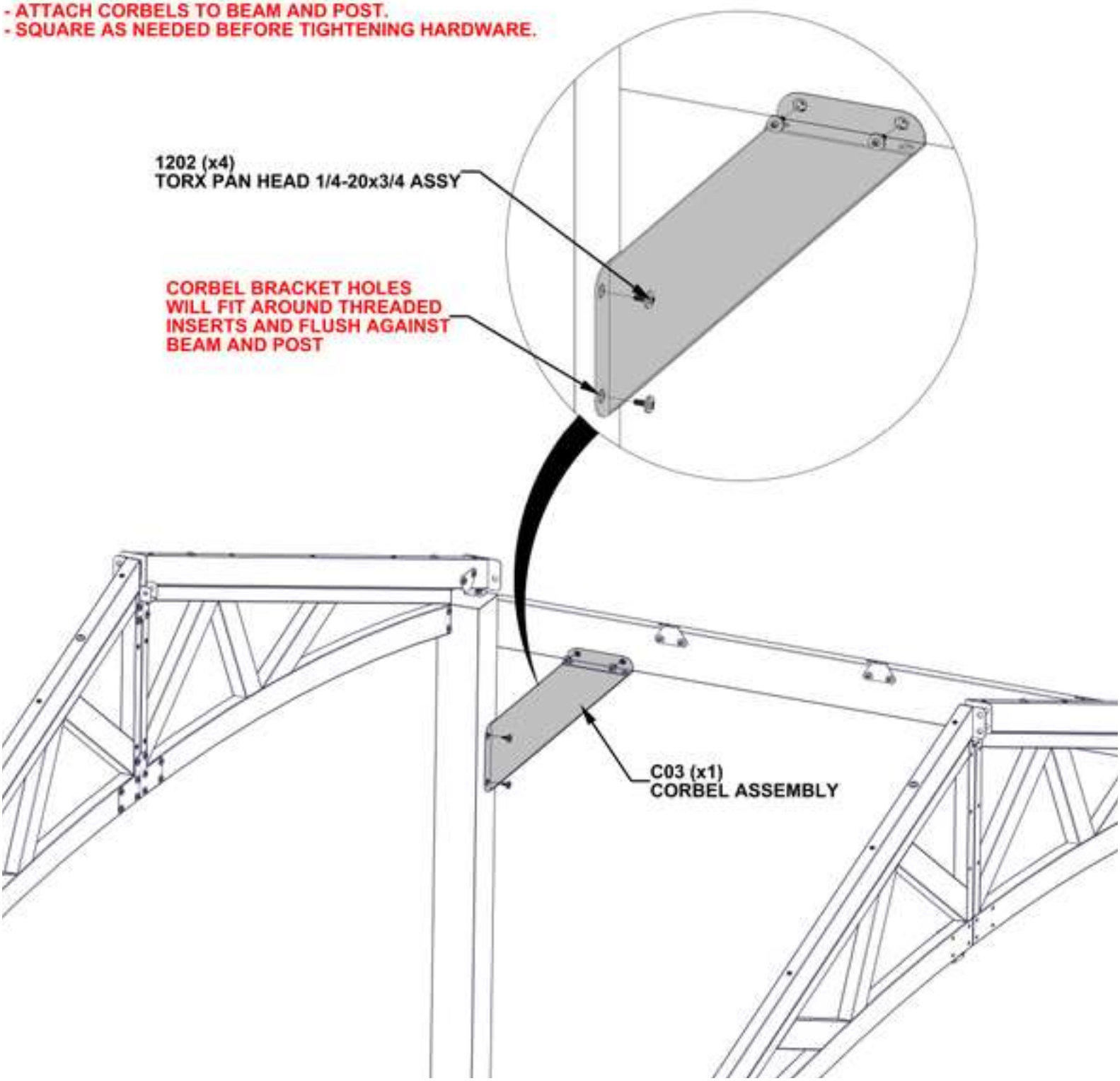

STEP 20 - FRAME ASSEMBLY



C02 (x1) CORBEL ASSEMBLY - A4M04197
22 5/16"x5 1/4"x2 3/4" (70x134x566)

QTY	PART NUMBER	DESCRIPTION
4	H101202	TORX PAN HEAD 1/4-20x3/4 ASSY

- ATTACH CORBELS TO BEAM AND POST.
- SQUARE AS NEEDED BEFORE TIGHTENING HARDWARE.

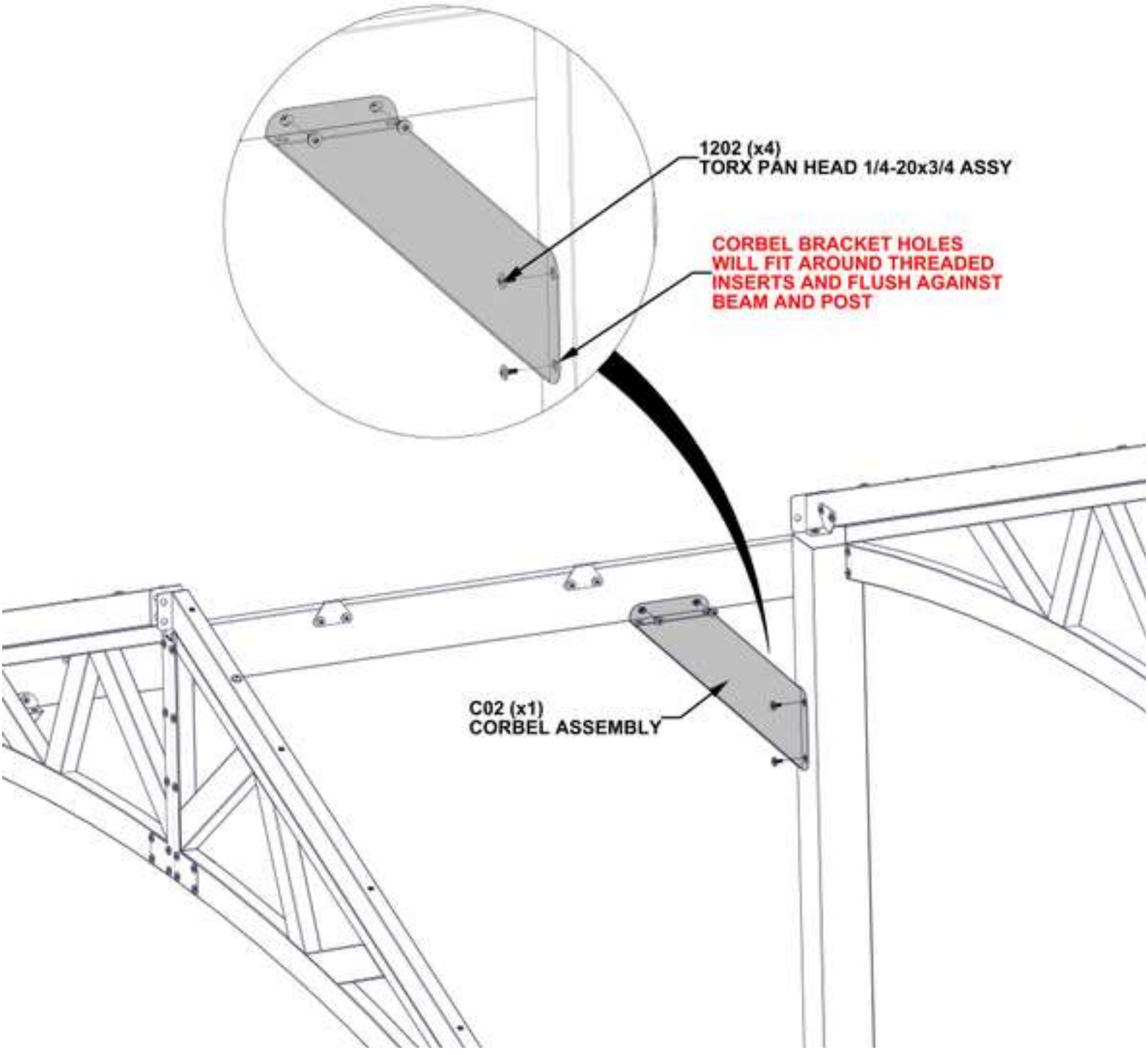

STEP 21 - SIDE BEAM ASSEMBLY

QTY	PART NUMBER	DESCRIPTION
6	H101202	TORX PAN HEAD 1/4-20x3/4 ASSY



B04 SIDE BEAM ASSEMBLY - A4M04199
(x1) 96"x5 1/4"x1 7/16" (36x134x2438)



J5 RAFTER BRACKET - A4M03803
(x3) 3 5/8"x2 11/16"x2 1/16" (52x68x91.5)

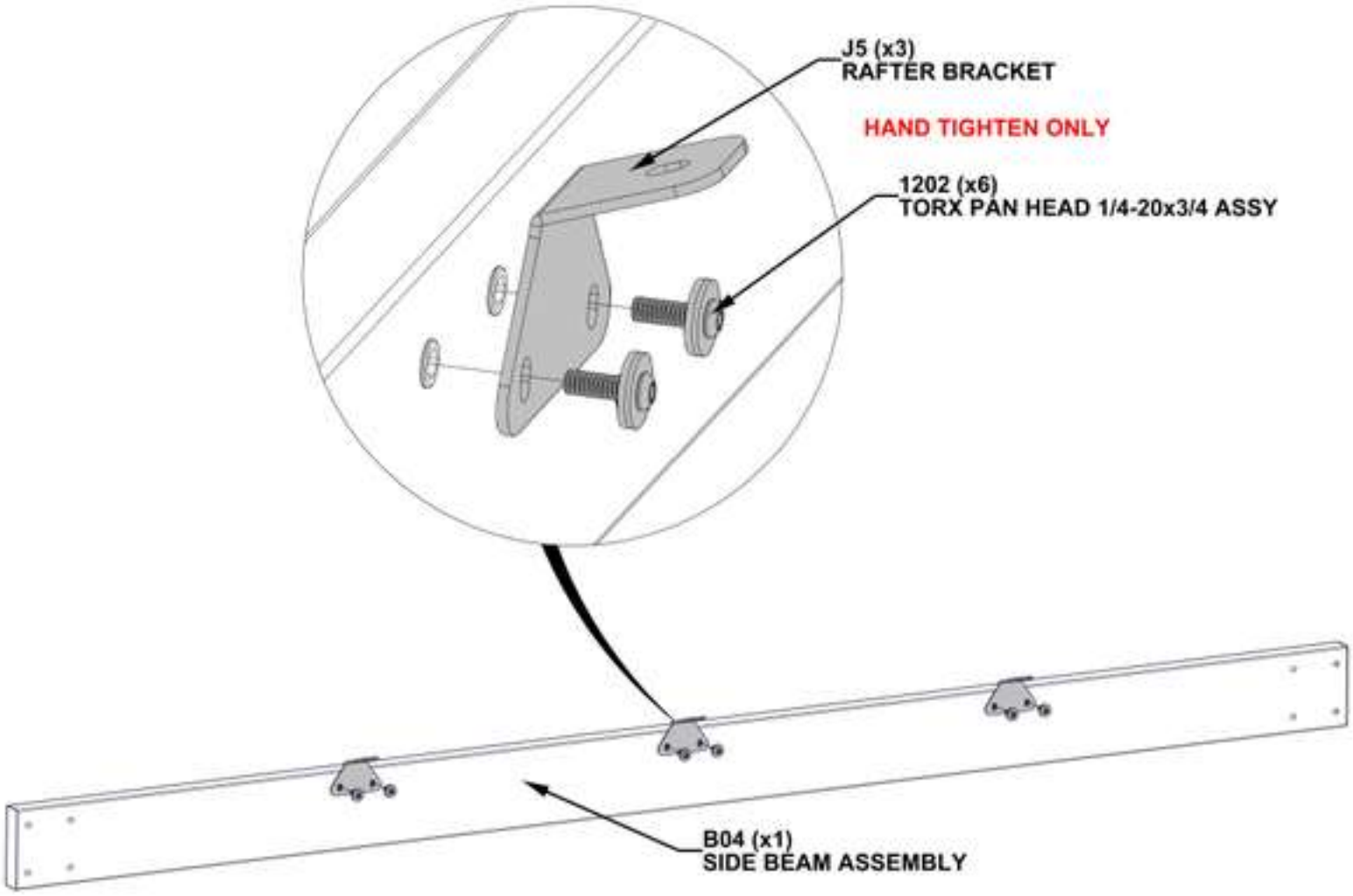

STEP 22 - FRAME ASSEMBLY

QTY	PART NUMBER	DESCRIPTION
8	H101103	TORX SOCKET SCREW 1/4-20

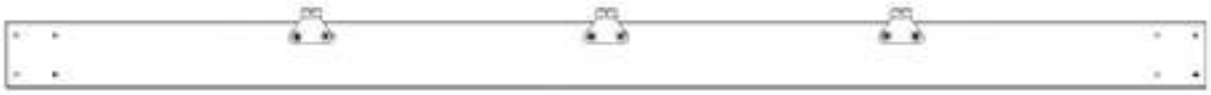

SIDE BEAM ASSEMBLY FROM STEP 21

- WITH AT LEAST ONE OTHER PERSON, ATTACH SIDE BEAM ASSEMBLY TO GABLE ARCH ASSEMBLIES.

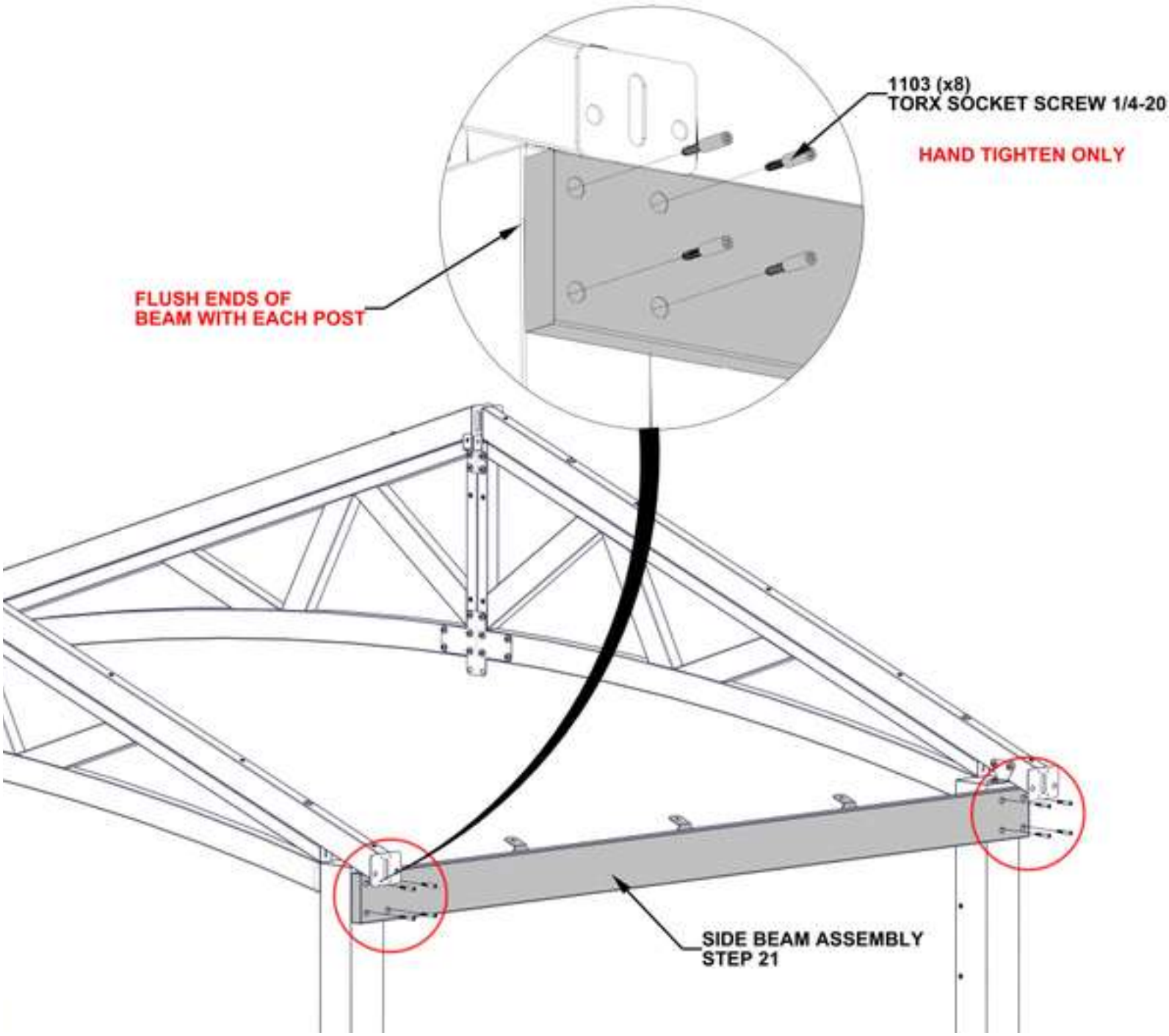

STEP 23 - WALL ASSEMBLY



B09 WALL PANEL - A4M04192
(x1) 1 7/16"x22 11/16"x86 1/2" (36x576.5x2197)

QTY	PART NUMBER	DESCRIPTION
6	H101202	TORX PAN HEAD 1/4-20x3/4 ASSY

- IT IS RECOMMENDED TO USE PROVIDED ANGLE DRIVER TO INSTALL HARDWARE IN THIS STEP.

BRACKET WILL FIT
AROUND THREADED INSERTS

1202 (x6)
TORX PAN HEAD 1/4-20x3/4 ASSY

HAND TIGHTEN ONLY

NOTCH IN BRACKET
TOWARD BOTTOM

B09 (x1)
WALL PANEL

STEP 24 - WALL ASSEMBLY



B09 WALL PANEL - A4M04192
(x1) 1 7/16"x22 11/16"x86 1/2" (36x576.5x2197)

QTY	PART NUMBER	DESCRIPTION
8	H101202	TORX PAN HEAD 1/4-20x3/4 ASSY

- IT IS RECOMMENDED TO USE PROVIDED ANGLE DRIVER TO INSTALL HARDWARE IN THIS STEP.

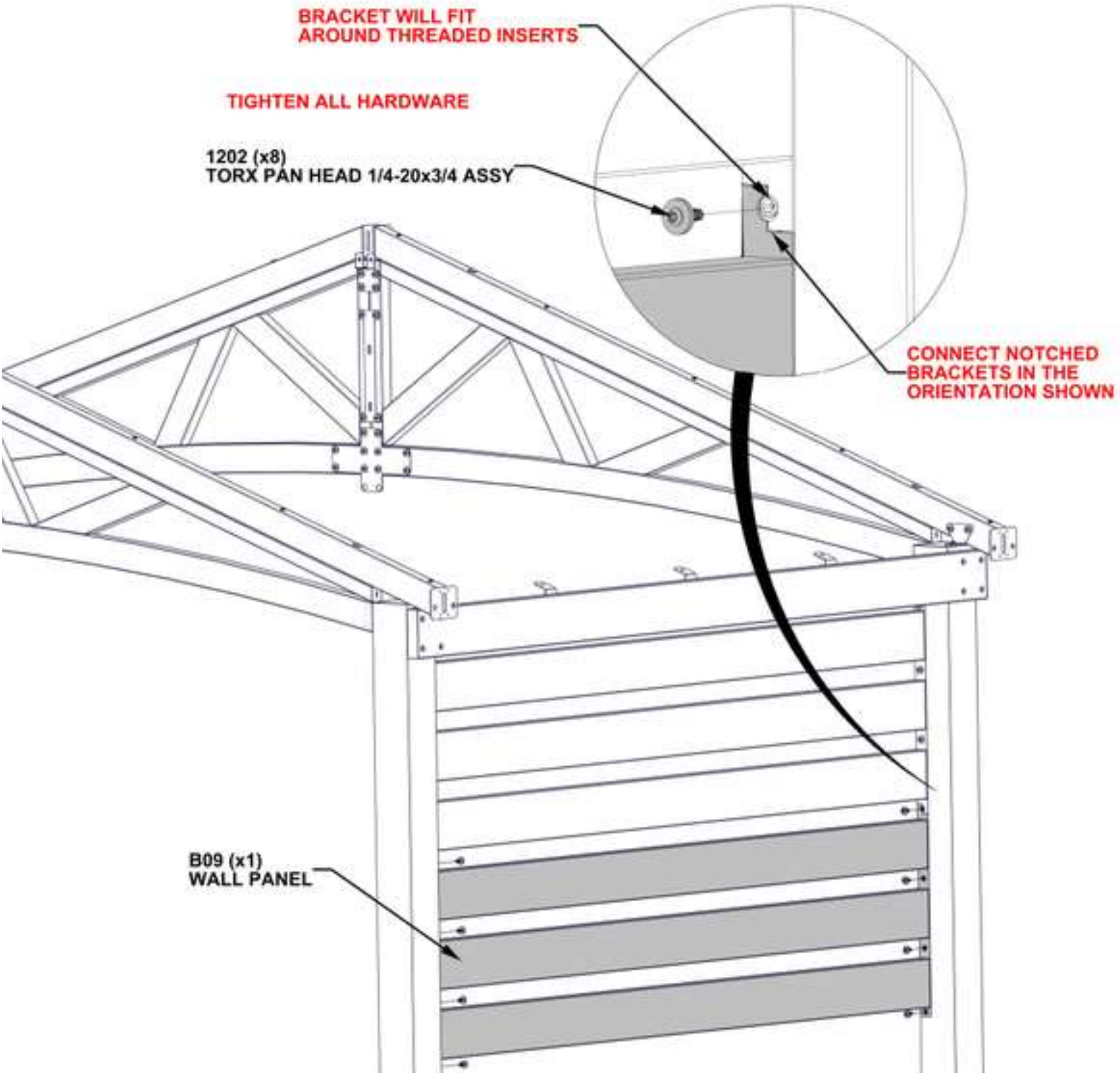

STEP 25 - SQUARE STRUCTURE

CRITICAL:
- **SQUARE UNIT BEFORE PROCEEDING TO NEXT STEPS.**
- **THE BELOW DIMENSIONS ARE CRITICAL TO THE FINAL ASSEMBLY.**
- **MEASUREMENTS SHOULD BE WITHIN +/- 1/4" (6mm).**
- **MEASUREMENTS OUTSIDE OF TOLERANCE WILL LEAD TO ISSUES ON FUTURE ASSEMBLY STEPS.**

MEASUREMENTS TAKEN FROM INSIDE CORNER TO INSIDE CORNER OF POST

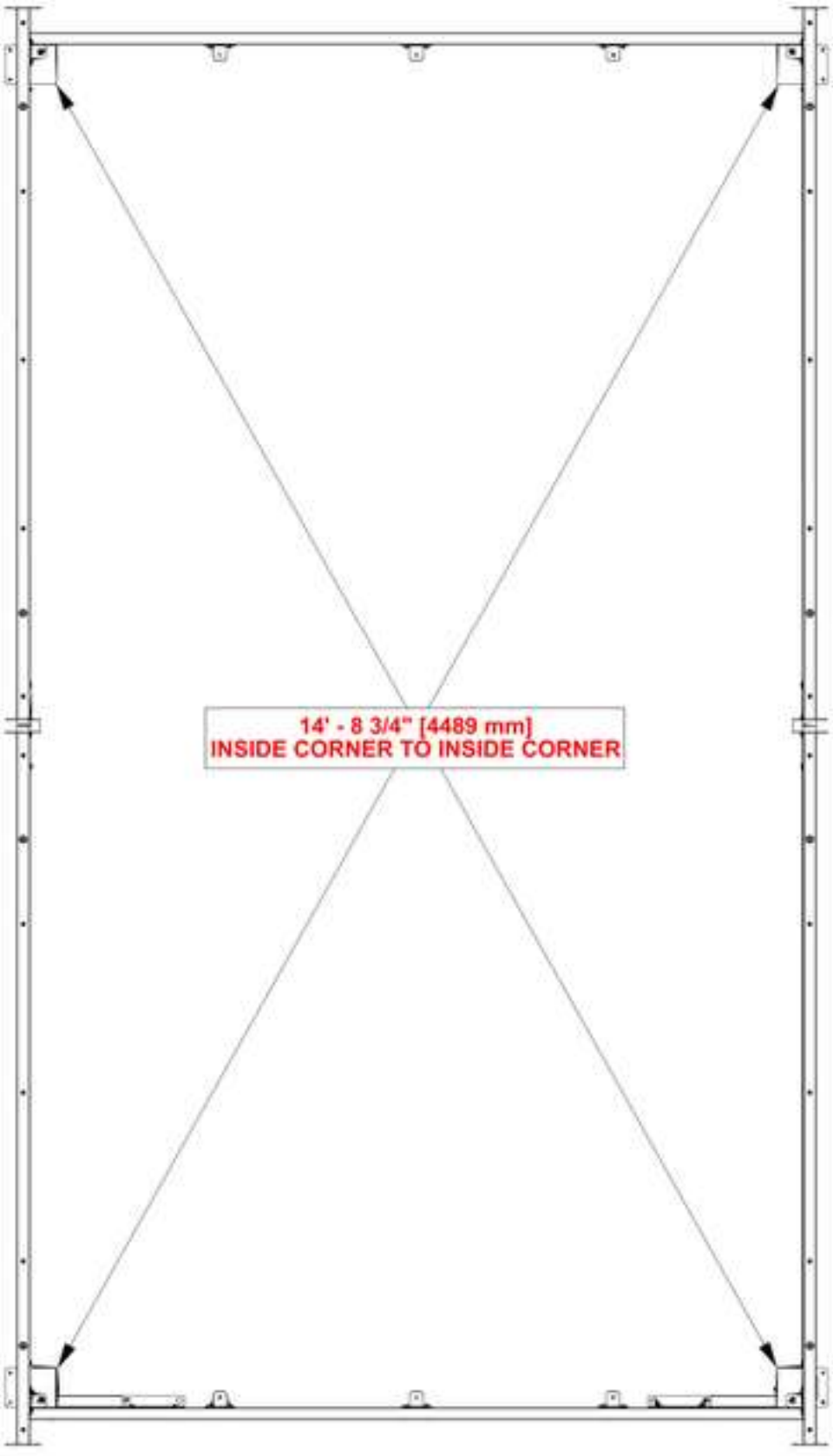

STEP 26 - RIDGE BEAM ASSEMBLY

QTY	PART NUMBER	DESCRIPTION
6	H101202	TORX PAN HEAD 1/4-20x3/4 ASSY



B01 RIDGE BEAM ASSEMBLY - A4M04173
(x1) 67 1/4"x5 1/4"x1 7/16" (36x134x1708)



J2 SPLICE BRACKET - A4M01270
(x1) 1 1/4"X5 1/8"X15 3/4" (33x131x400)

- FOR EASE OF ASSEMBLY, WE RECOMMEND USING SAW HORSES FOR STEPS 26 - 28.

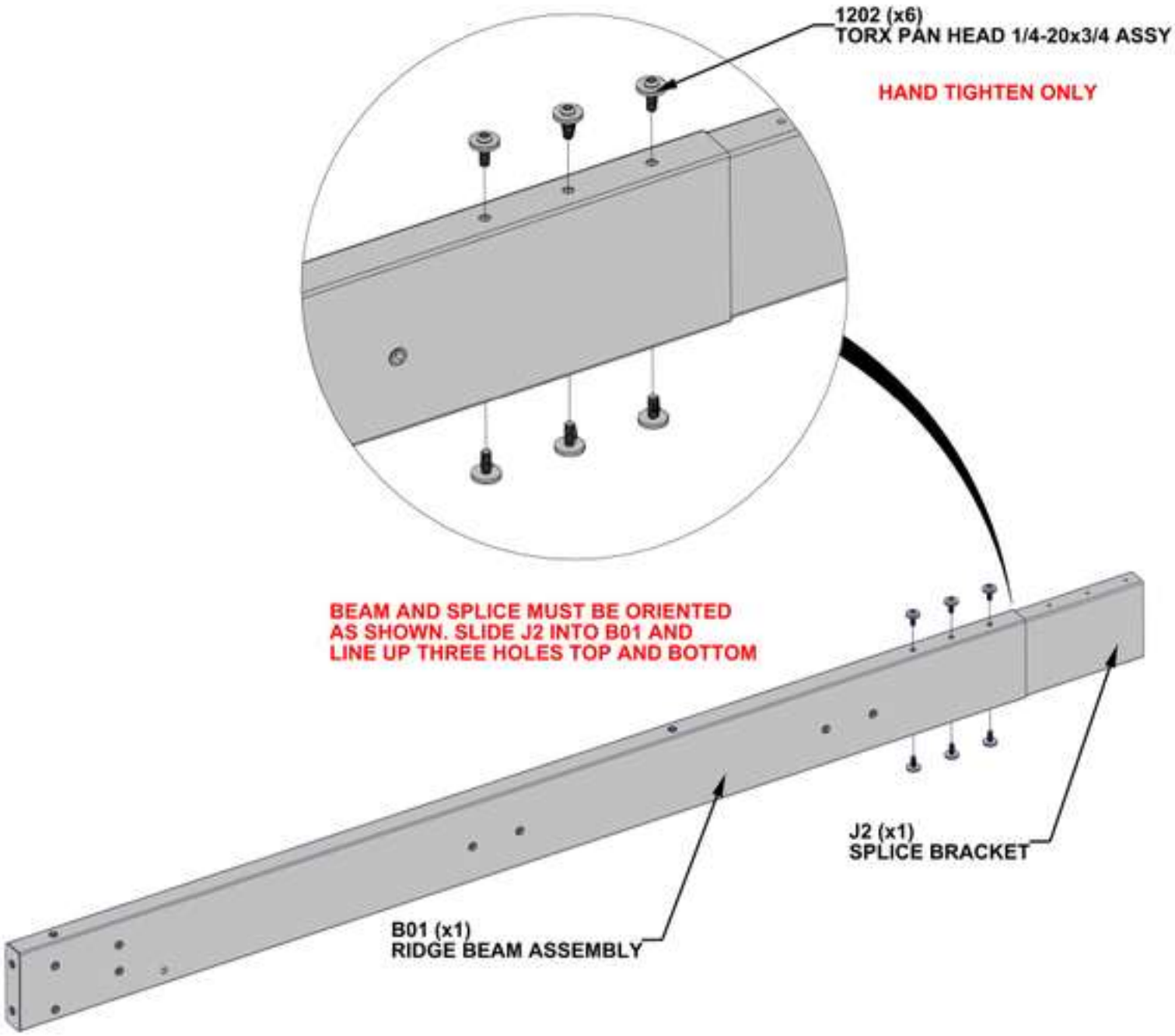

STEP 27 - RIDGE BEAM ASSEMBLY

QTY	PART NUMBER	DESCRIPTION
6	H101202	TORX PAN HEAD 1/4-20x3/4 ASSY



B02 RIDGE BEAM ASSEMBLY - A4M04174
(x1) 61"x5 1/4"x1 7/16" (36x134x1550)

- SLIDE B02 INTO J2 SPLICE BRACKET AND LINE UP THREE HOLES TOP AND BOTTOM.
- GENTLY TAP ENDS OF ASSEMBLY WITH RUBBER MALLET UNTIL GAP CLOSES.

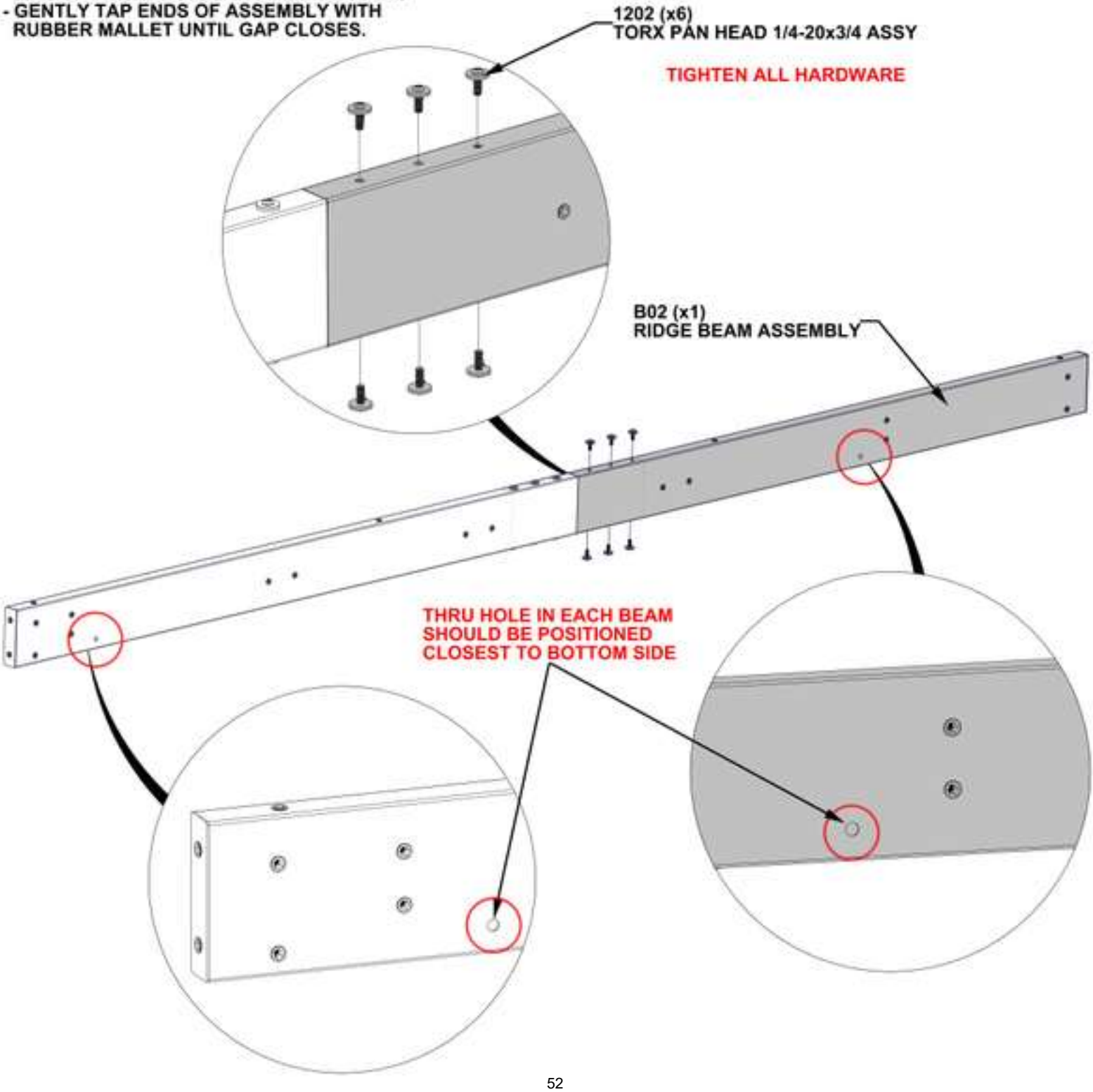

STEP 28 - RIDGE BEAM ASSEMBLY



J3 GABLE BRACKET - A4M03805
(x2) 11 1/8"x6 7/16"x1/16" (2x163x282)

QTY	PART NUMBER	DESCRIPTION
4	H101202	TORX PAN HEAD 1/4-20x3/4 ASSY

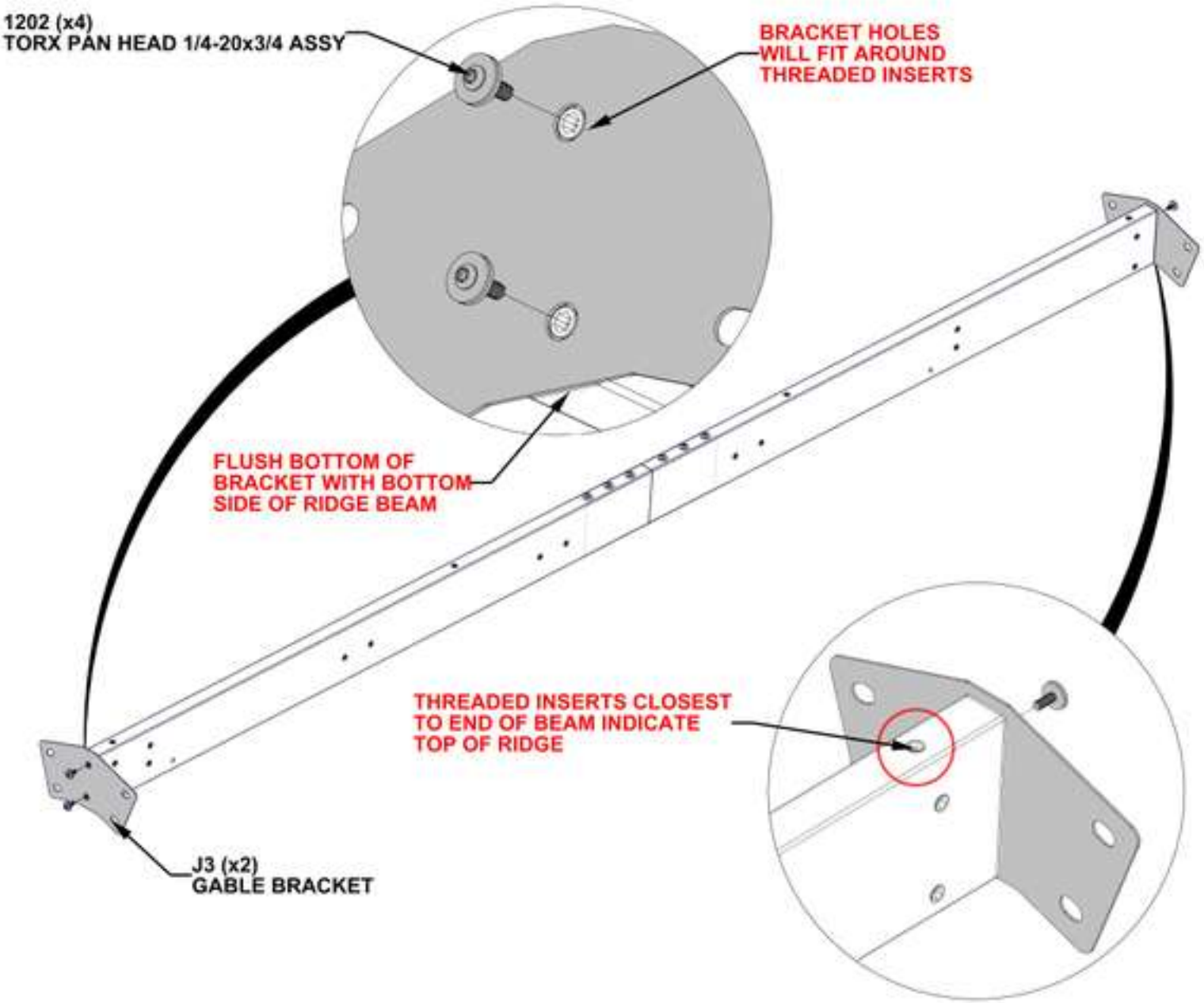

STEP 29A - RIDGE ASSEMBLY

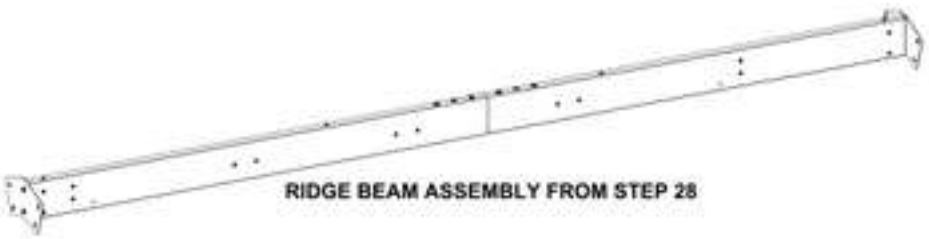

RIDGE BEAM ASSEMBLY FROM STEP 28

- WITH AT LEAST TWO PEOPLE. ATTACH RIDGE ASSEMBLY TO ARCH ASSEMBLIES.
- RIDGE BEAM ASSEMBLY MUST BE ORIENTED AS SHOWN BELOW WITH LONG OVERHANG TOWARD THE FRONT.
- HARDWARE HOLDING RAFTERS TO GABLE ARCHES MAY NEED TO BE LOOSENED TO ALLOW RIDGE BEAM TO SLIDE INTO PLACE.

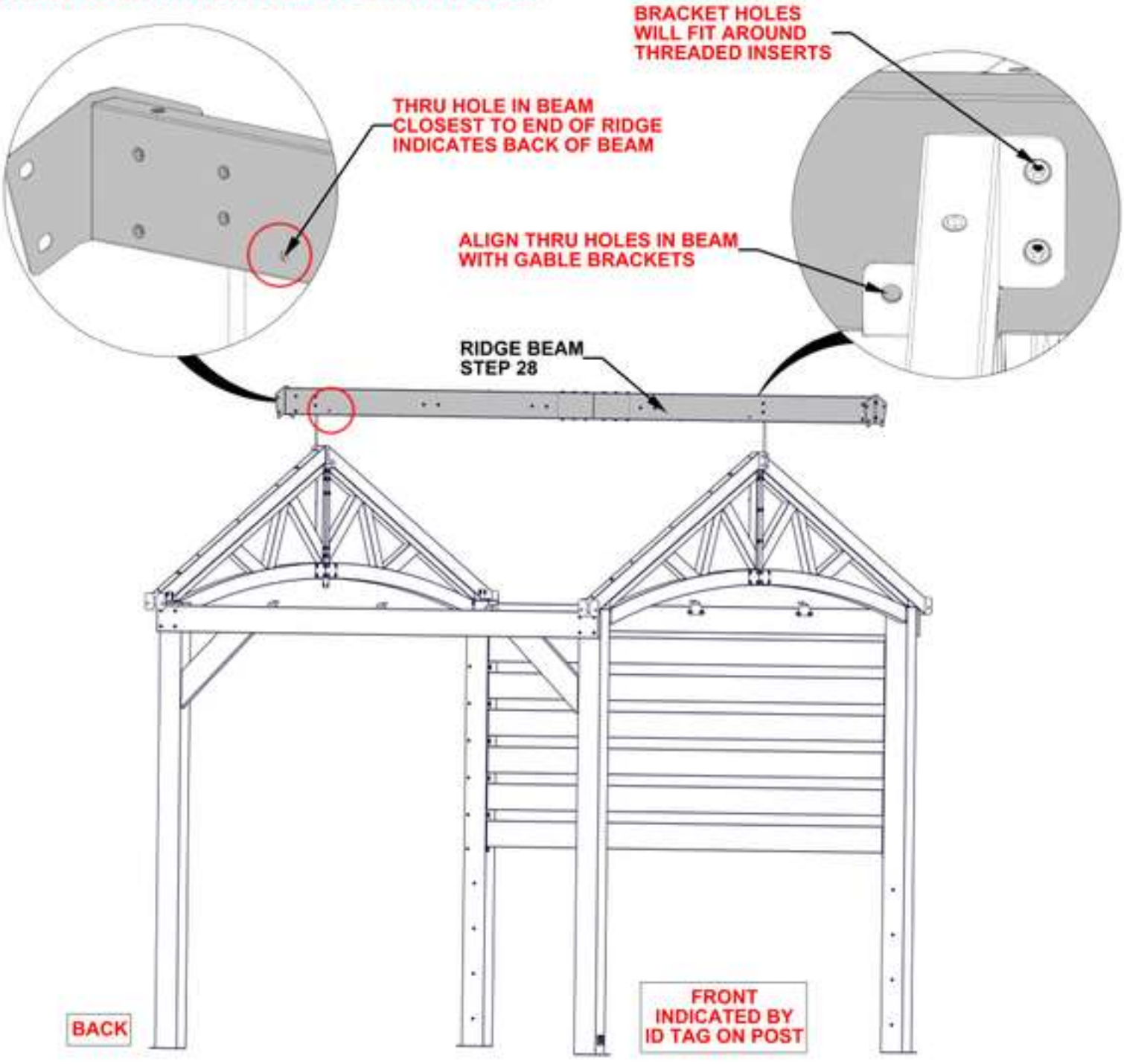

STEP 29B - RIDGE ASSEMBLY

QTY	PART NUMBER	DESCRIPTION
8	H101202	TORX PAN HEAD 1/4-20x3/4 ASSY

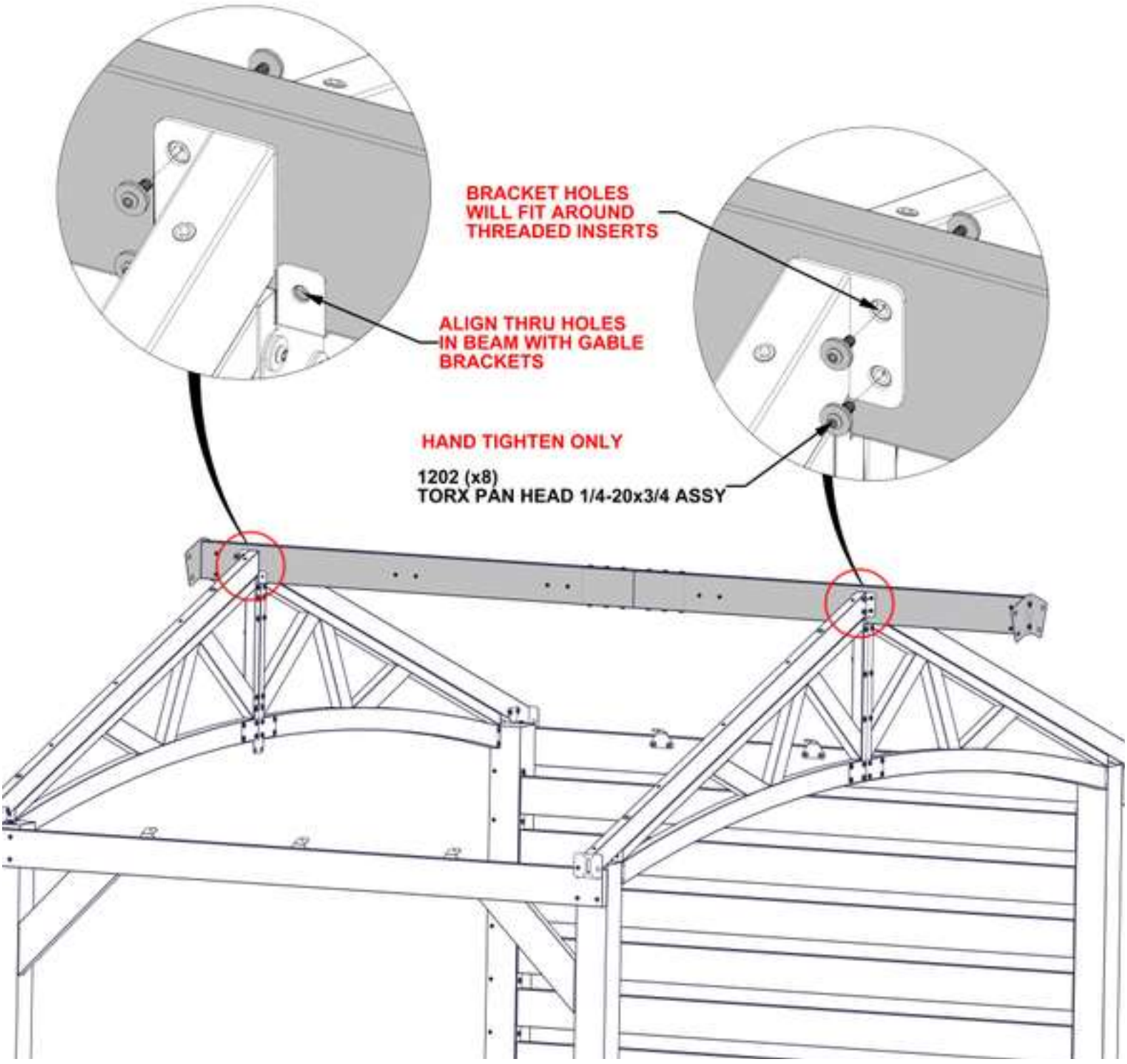

STEP 29C - RIDGE ASSEMBLY

QTY	PART NUMBER	DESCRIPTION
2	H100479	NUT LOCK 5/16 BLK
2	H100205	BOLT WH 5/16x2 1/4 BLK
2	H100474	WASHER FLAT 9x18 BLK

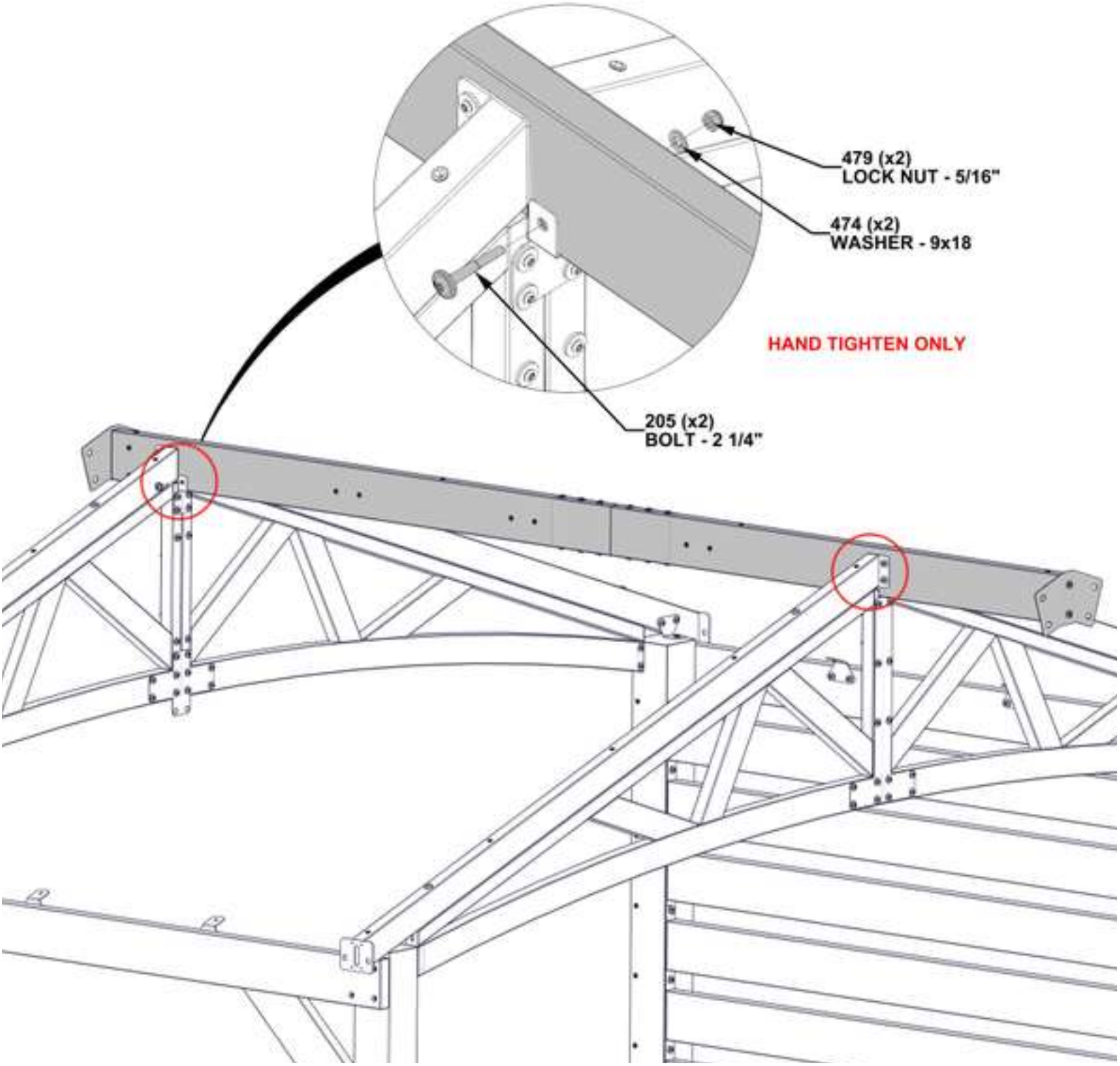

STEP 30 - RIDGE ASSEMBLY



C01 (x2) CORBEL ASSEMBLY - A4M04186
23 3/8"x8 9/16"x1 7/16" (36x217x593)

QTY	PART NUMBER	DESCRIPTION
12	H101202	TORX PAN HEAD 1/4-20x3/4 ASSY

- IT IS RECOMMENDED TO USE PROVIDED ANGLE DRIVER TO INSTALL HARDWARE IN THIS STEP.
- ATTACH CORBELS TO RIDGE BEAM AND ARCH ASSEMBLIES.
- SQUARE AS NEED BEFORE TIGHTENING HARDWARE.

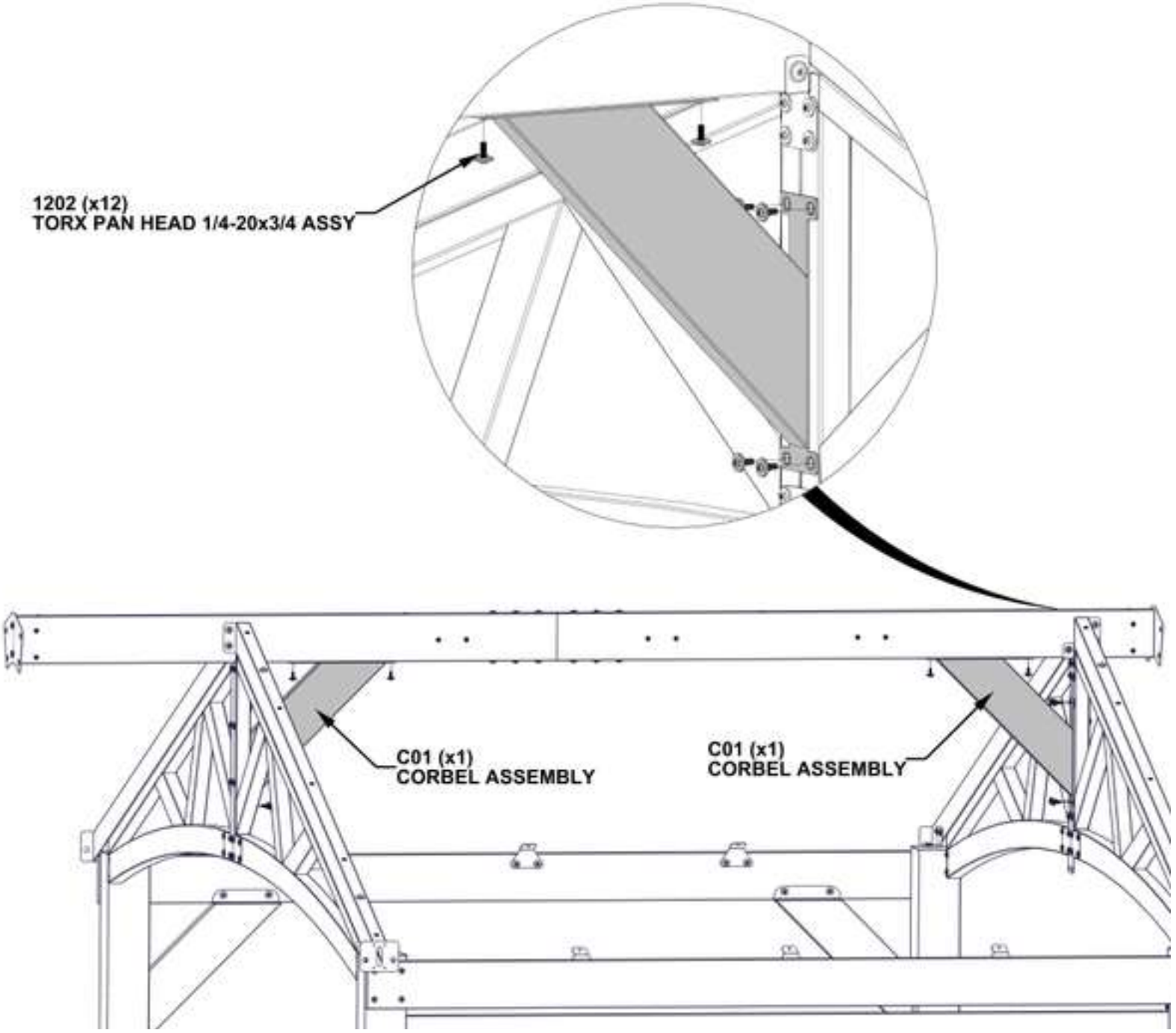

STEP 31 - RIDGE ASSEMBLY

BEFORE PROCEEDING TO THE NEXT STEPS, TIGHTEN THE FOLLOWING HARDWARE THAT WAS LEFT LOOSE IN PREVIOUS STEPS.

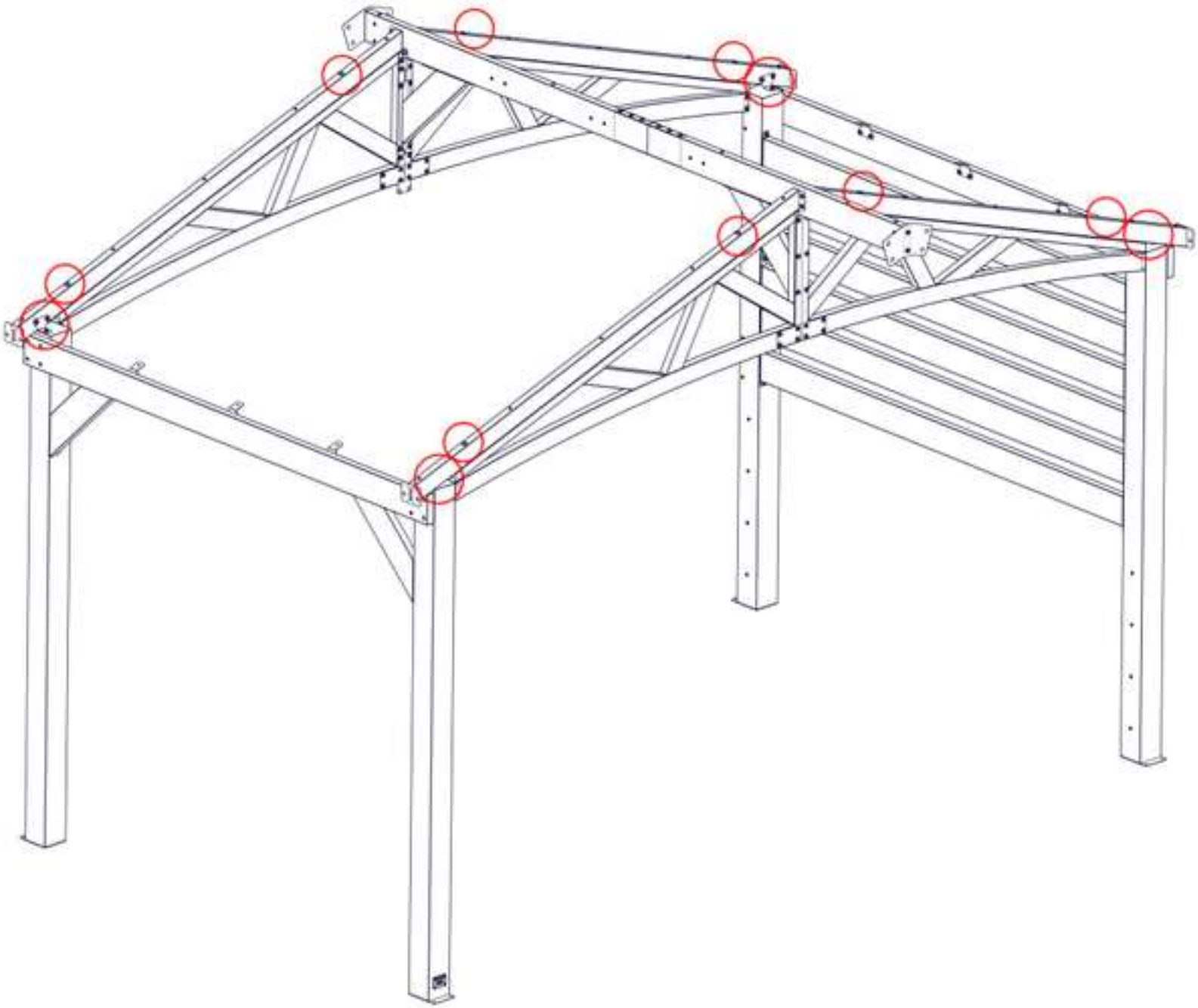

STEP 32A - RIDGE ASSEMBLY

QTY	PART NUMBER	DESCRIPTION
2	H101053	STEEL WASHER 6x20
2	H101054	SEALANT WASHER
2	H101293	TORX PAN HEAD 1/4-20x1 3/8"



4195 RIDGE CAP - A4M04195
(x1) 73 1/16"x4 11/16"x9/16" (14x120x1856)



J10 SUPPORT RING - A4M03808
(x2) 13/16"x7/16" (11x20)

- REMOVE PROTECTIVE FILM.
- ORIENT RIDGE CAP AS SHOWN BELOW.
- WARNING: GLOVES ARE RECOMMENDED WHEN HANDLING STEEL ROOF PIECES.

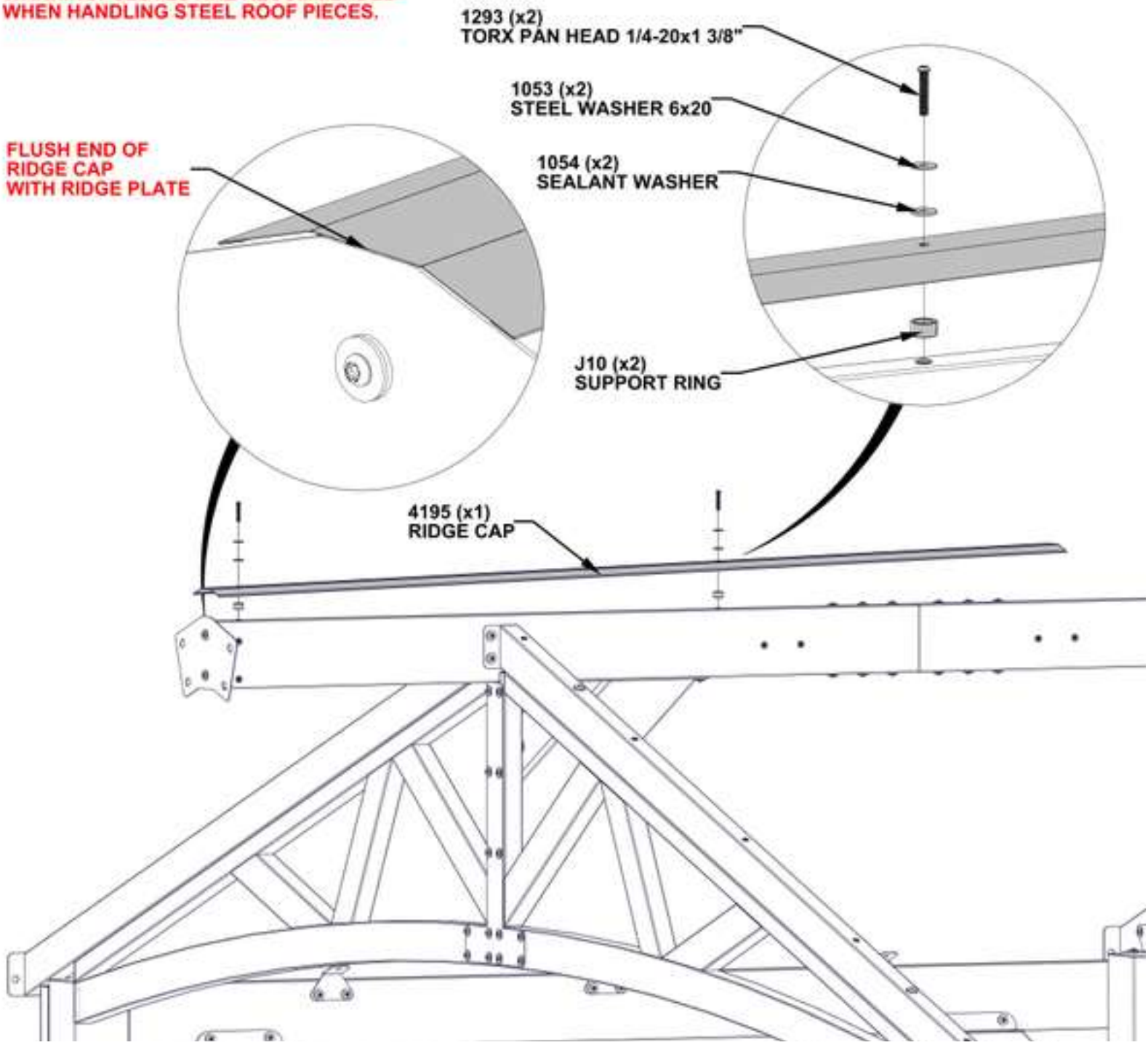

STEP 32B - RIDGE ASSEMBLY



3535 RIDGE CAP SPLICE - A4M03535
(x1) 3 15/16"x4 13/16"x5/8" (16x122x100)

- REMOVE PROTECTIVE FILM.
- ORIENT RIDGE CAP SPLICE AS SHOWN BELOW.
- WARNING: GLOVES ARE RECOMMENDED WHEN HANDLING STEEL ROOF PIECES.

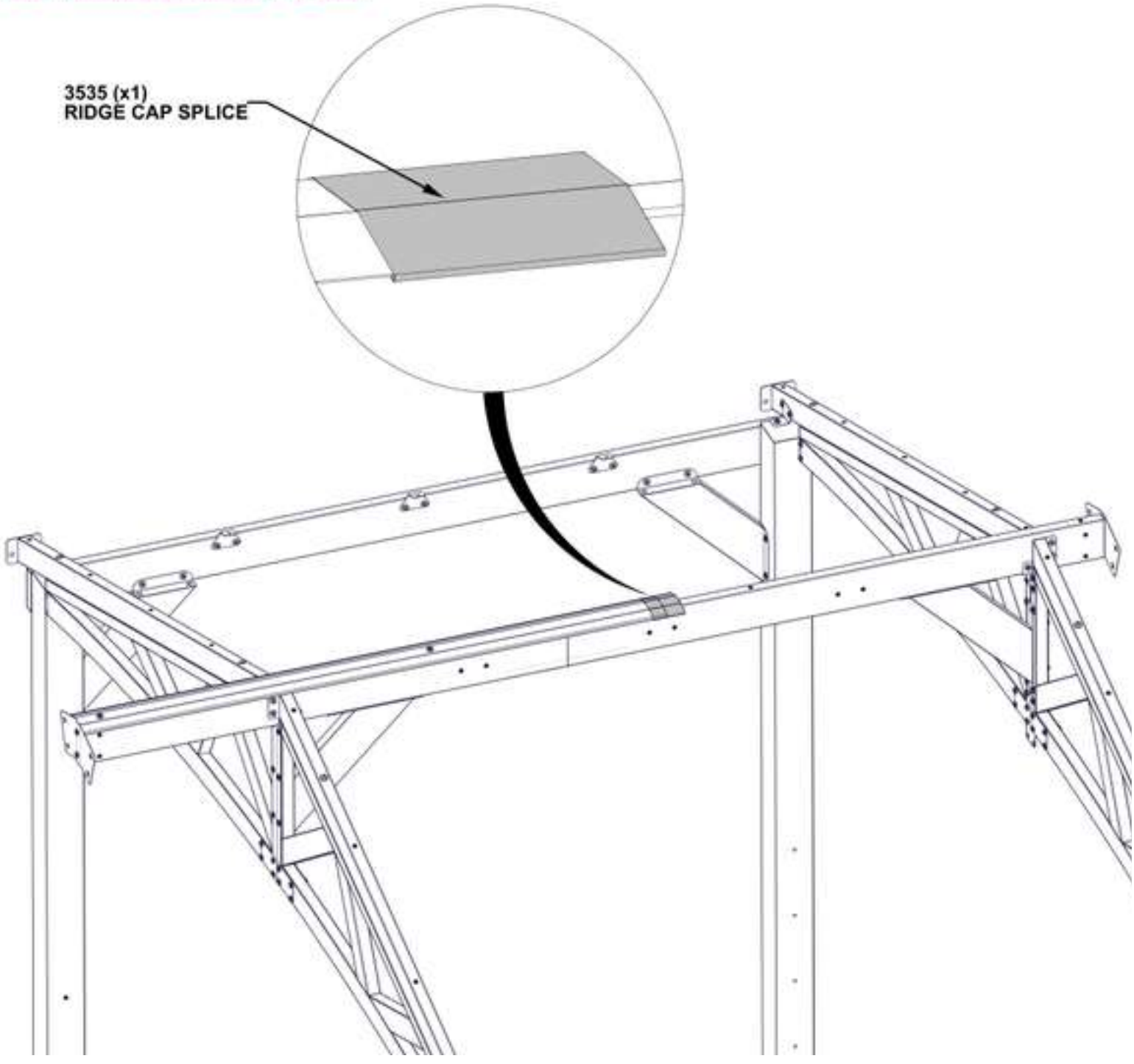

STEP 32C - RIDGE ASSEMBLY

QTY	PART NUMBER	DESCRIPTION
2	H101053	STEEL WASHER 6x20
2	H101054	SEALANT WASHER
2	H101293	TORX PAN HEAD 1/4-20x1 3/8"

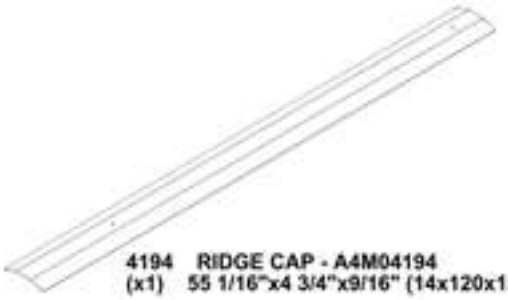

4194 RIDGE CAP - A4M04194
(x1) 55 1/16"x4 3/4"x9/16" (14x120x1398)



J10 SUPPORT RING - A4M03808
(x2) 13/16"x7/16" (11x20)

- REMOVE PROTECTIVE FILM.
- ORIENT RIDGE CAP AND SLIDE INTO RIDGE CAP SPLICE AS SHOWN BELOW.
- WARNING: GLOVES ARE RECOMMENDED WHEN HANDLING STEEL ROOF PIECES.

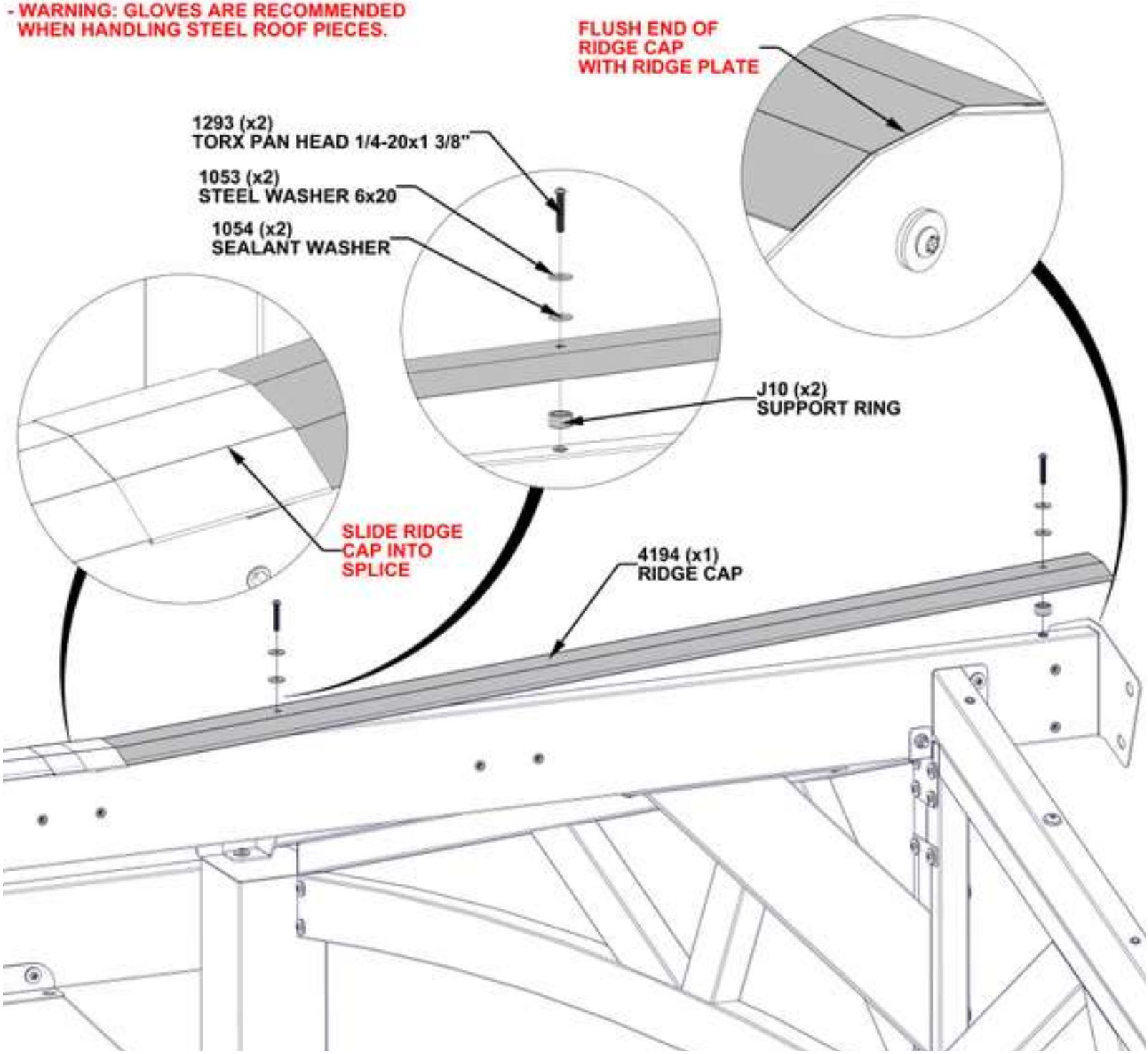

STEP 33A - ROOF ASSEMBLY

QTY	PART NUMBER	DESCRIPTION
12	H101202	TORX PAN HEAD 1/4-20x3/4 ASSY



R01 RAFTER ASSEMBLY - A4M04179
(x6) 91 1/2"x4 5/16"x3 1/8" (80x110x2325)

- ATTACH EACH RAFTER AT THE RIDGE AS SHOWN BELOW.

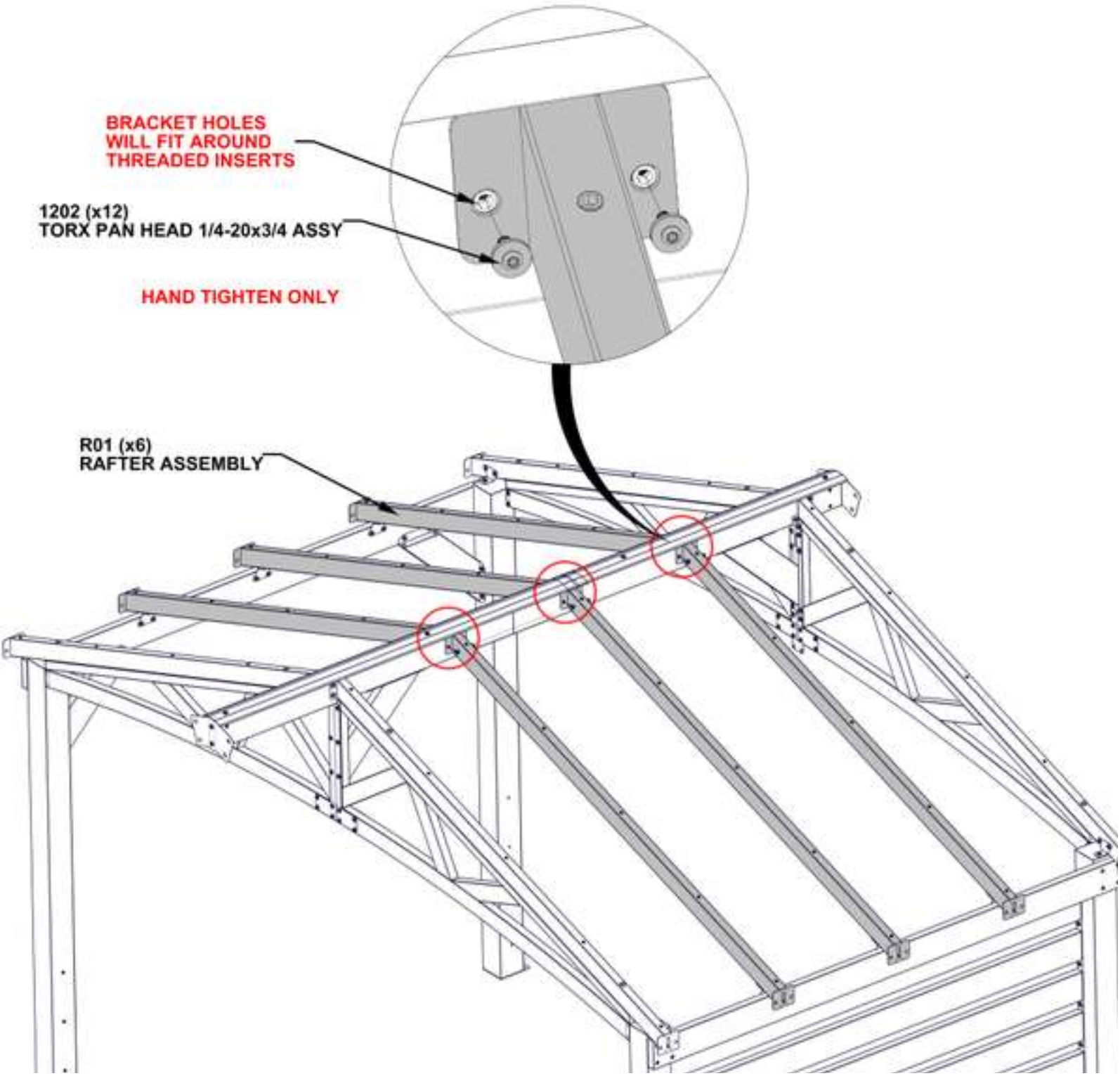

STEP 33B - ROOF ASSEMBLY

QTY	PART NUMBER	DESCRIPTION
6	H101202	TORX PAN HEAD 1/4-20x3/4 ASSY

- ATTACH END OF EACH RAFTER TO BRACKETS ALONG SIDE BEAM.

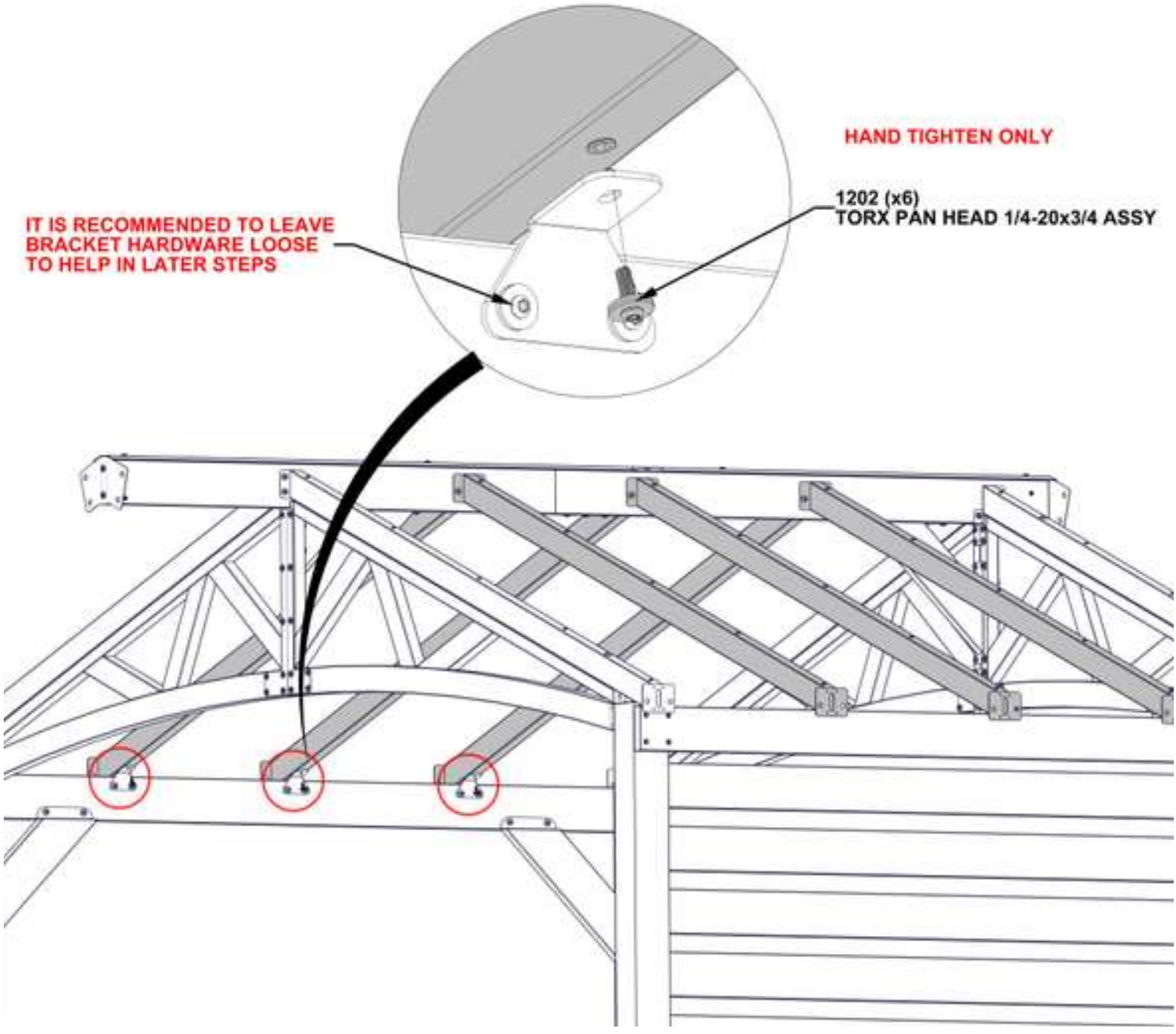

STEP 34 - BEAM ASSEMBLY

QTY	PART NUMBER	DESCRIPTION
12	H101202	TORX PAN HEAD 1/4-20x3/4 ASSY



B08 DRIP BEAM ASSEMBLY - A4M04178
(x2) 71 3/8"x4 13/16"x1 7/16" (36x122x1813.5)



J6 SPLICE BRACKET - A4M03806
(x2) 19 11/16"x4 11/16"x32.5 (32.5x118.5x500)

- FOR EASE OF ASSEMBLY, WE RECOMMEND USING SAW HORSES FOR STEPS 34 - 35.
- REPEAT THIS STEP TWICE

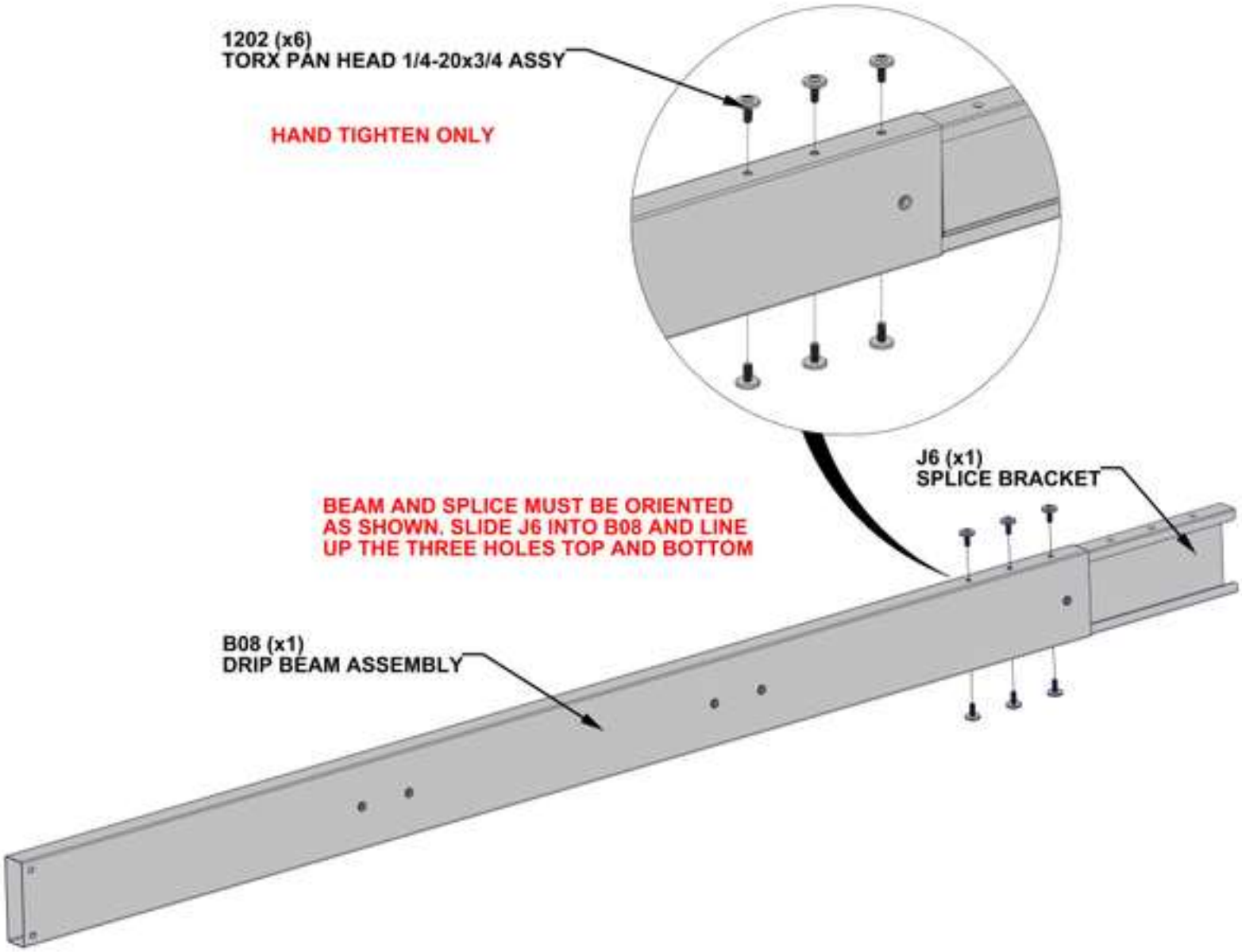

STEP 35 - BEAM ASSEMBLY

QTY	PART NUMBER	DESCRIPTION
12	H101202	TORX PAN HEAD 1/4-20x3/4 ASSY

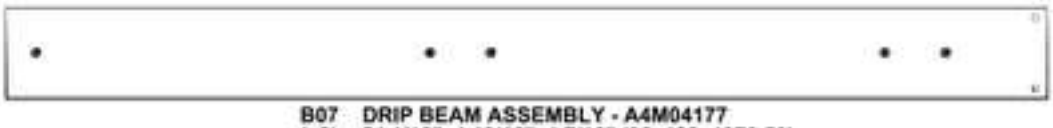

B07 DRIP BEAM ASSEMBLY - A4M04177
(x2) 54 1/16"x4 13/16"x1 7/16" (36x122x1372.50)

- SLIDE B07 INTO SPLICE BRACKET. GENTLY TAP ENDS OF ASSEMBLY WITH RUBBER MALLET UNTIL GAP CLOSES.
- REPEAT THIS STEP TWICE

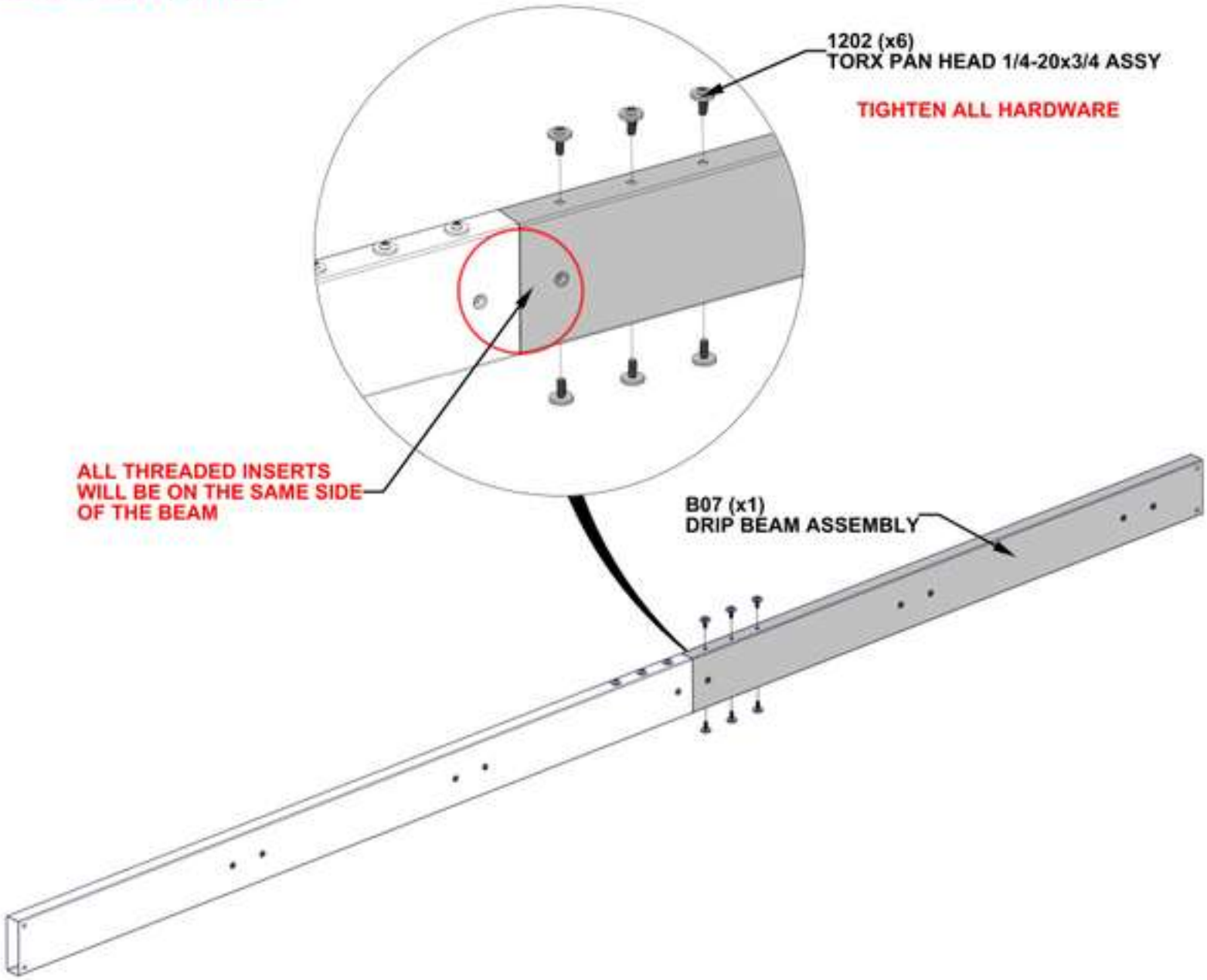

STEP 36 - ROOF ASSEMBLY

QTY	PART NUMBER	DESCRIPTION
20	H101202	TORX PAN HEAD 1/4-20x3/4 ASSY

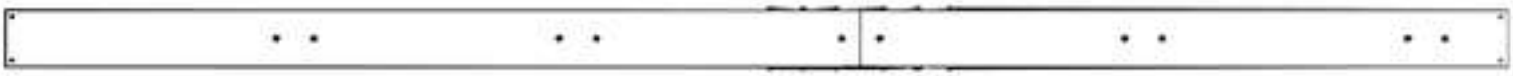

BEAM ASSEMBLIES FROM
STEPS 34 - 35 (x2)

- WITH AT LEAST TWO ADDITIONAL PEOPLE, ATTACH BEAM ASSEMBLY TO RAFTER ENDS.
- BEAM ASSEMBLY MUST BE ORIENTED AS SHOWN BELOW WITH LONG OVERHANG TOWARD THE FRONT.

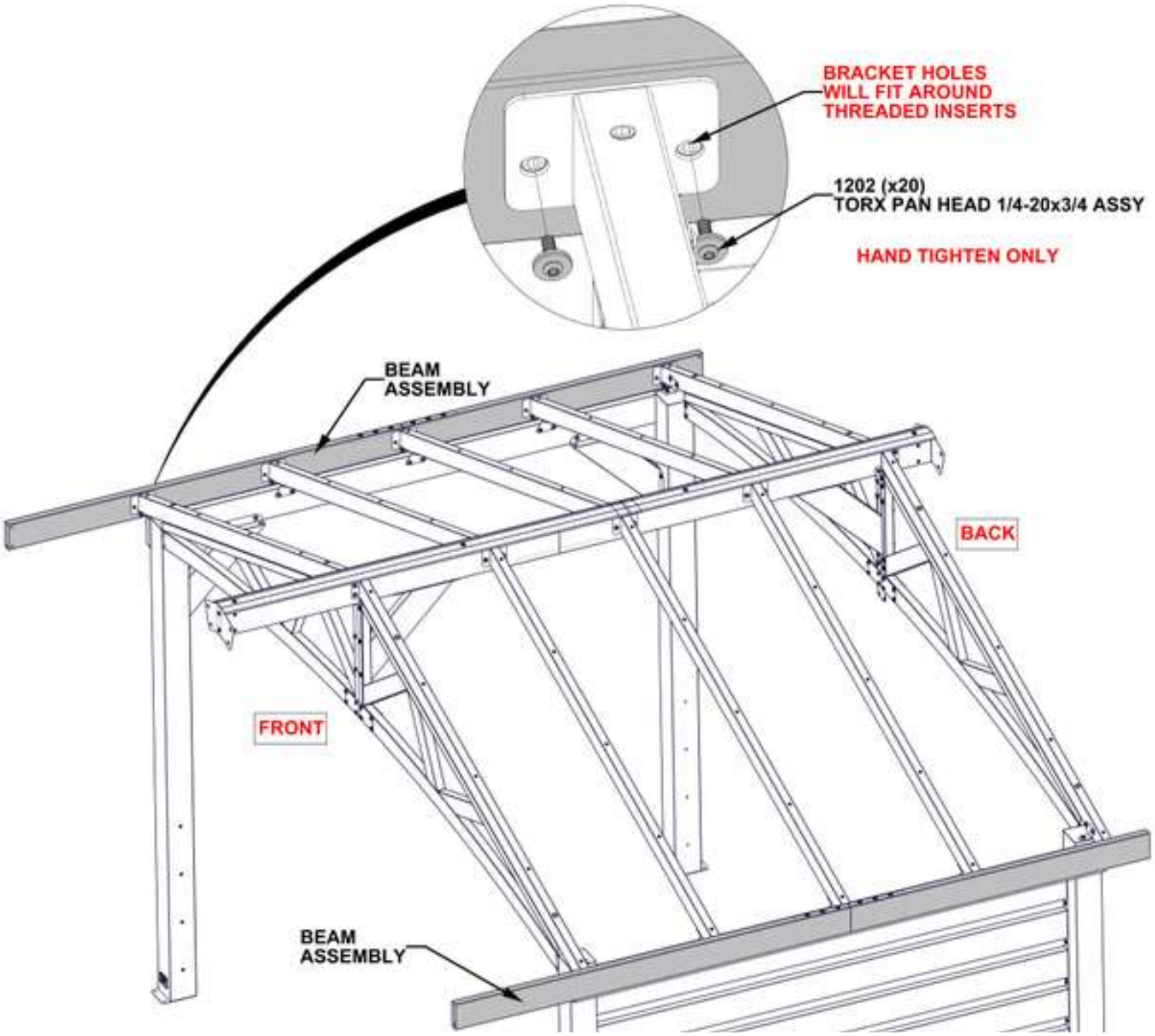

STEP 37 - ROOF ASSEMBLY

QTY	PART NUMBER	DESCRIPTION
4	H101202	TORX PAN HEAD 1/4-20x3/4 ASSY



B06 GABLE BEAM ASSEMBLY - A4M04176
(x2) 93 11/16"x5 1/4"x1 7/16" (36x134x2379)



J9 BEAM BRACKET - A4M03807
(x2) 5 9/16"x1 5/16"x4 9/16" (140.57x33.20x116)

- REPEAT THIS STEP TWICE

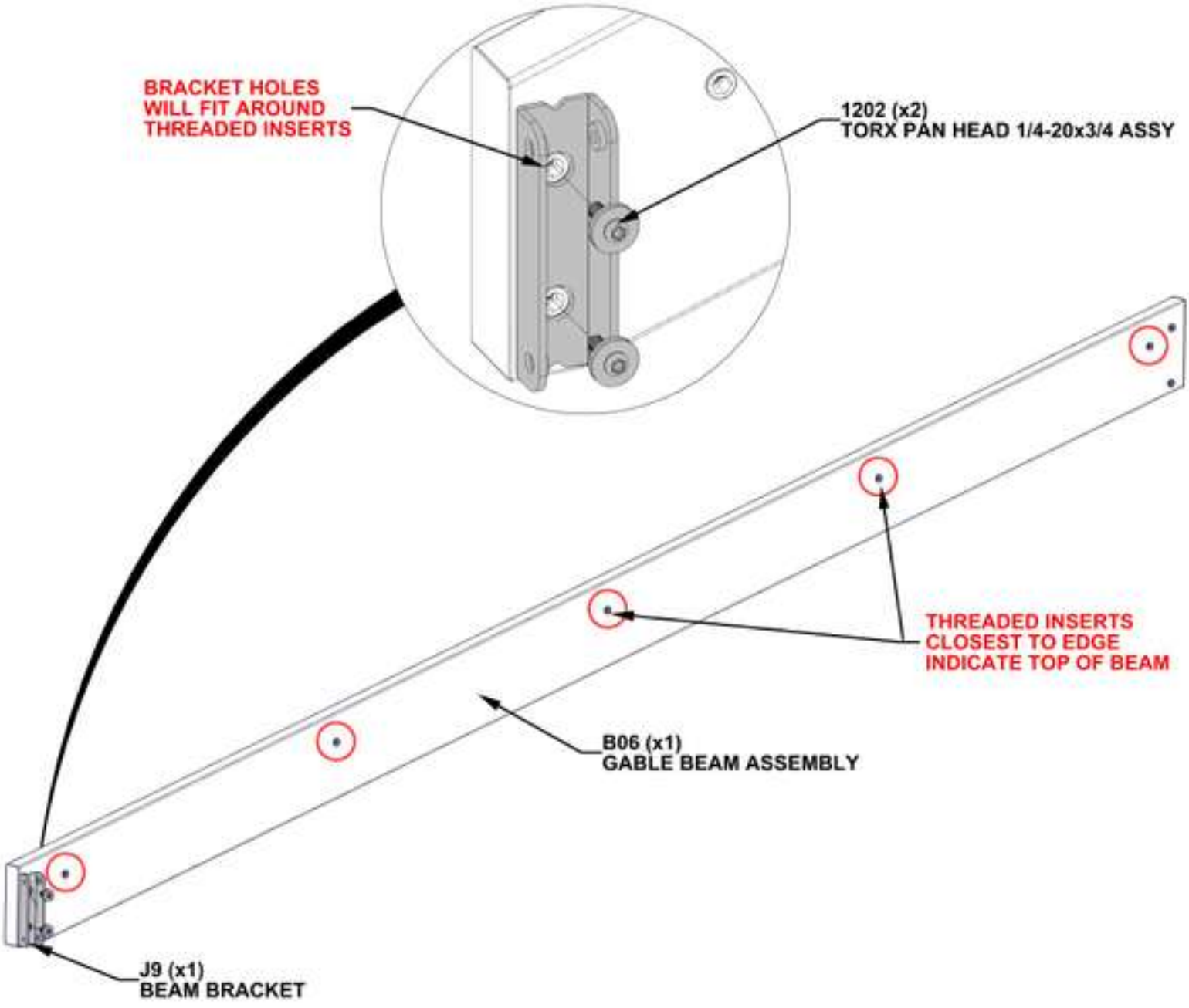

STEP 38 - ROOF ASSEMBLY



J8 GABLE BRACKET - A4M03804
(x2) 4 13/16"x1 9/16"x1 9/16" (40x40x123)

QTY	PART NUMBER	DESCRIPTION
4	H101202	TORX PAN HEAD 1/4-20x3/4 ASSY

- REPEAT THIS STEP TWICE

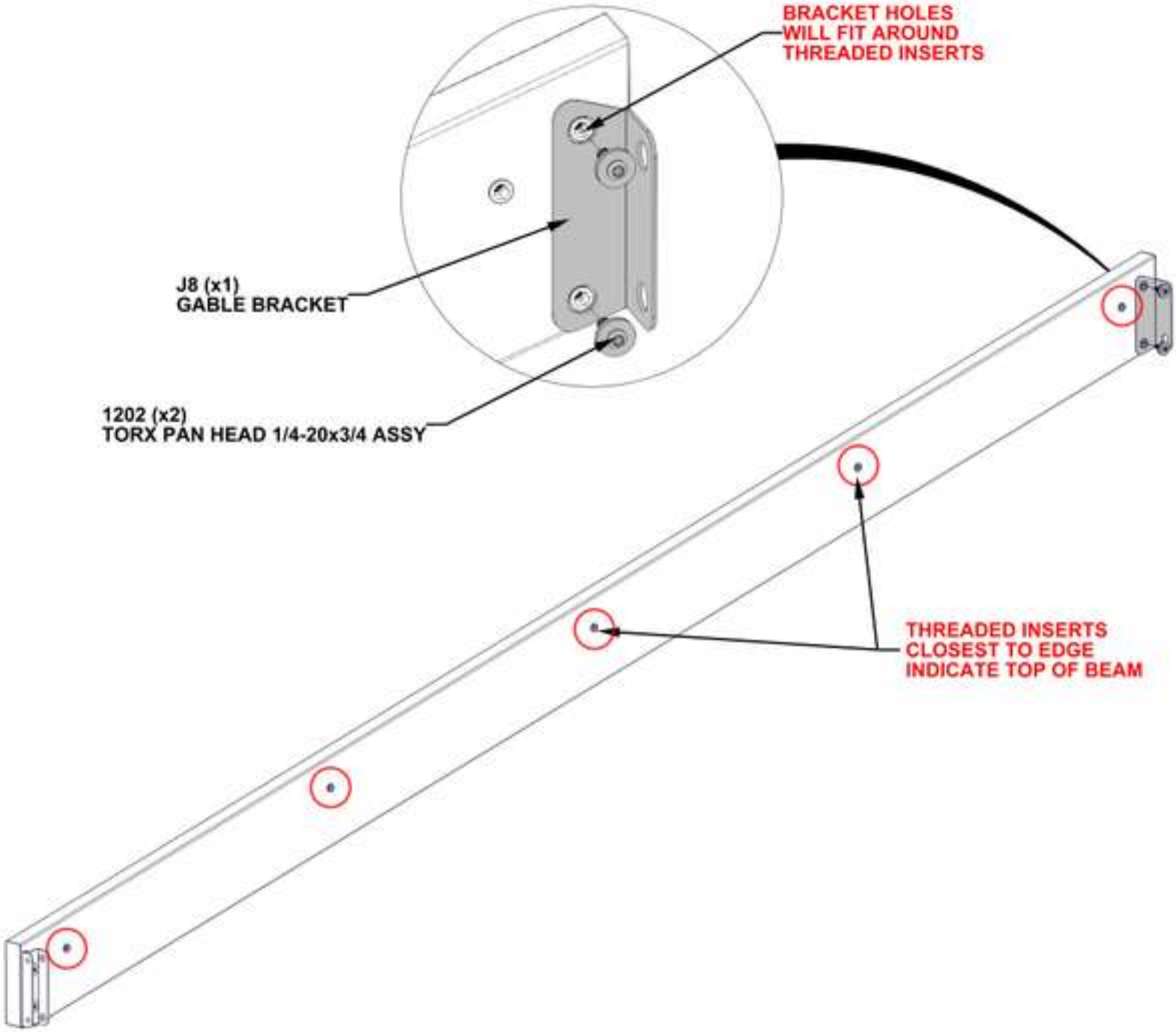

STEP 39A - ROOF ASSEMBLY

QTY	PART NUMBER	DESCRIPTION
4	H101202	TORX PAN HEAD 1/4-20x3/4 ASSY

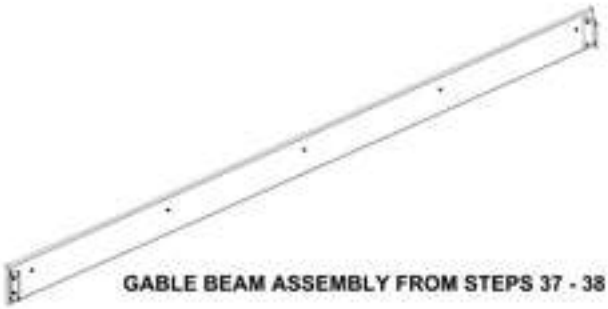

GABLE BEAM ASSEMBLY FROM STEPS 37 - 38

- WITH AT LEAST TWO ADDITIONAL PEOPLE, ATTACH GABLE BEAM ASSEMBLIES.
- REPEAT THIS STEP TWICE FOR BOTH SIDES OF STRUCTURE.
- GABLE BEAM ASSEMBLIES WILL BE ATTACHED ON OPPOSITE SIDES OF ROOF STRUCTURE.

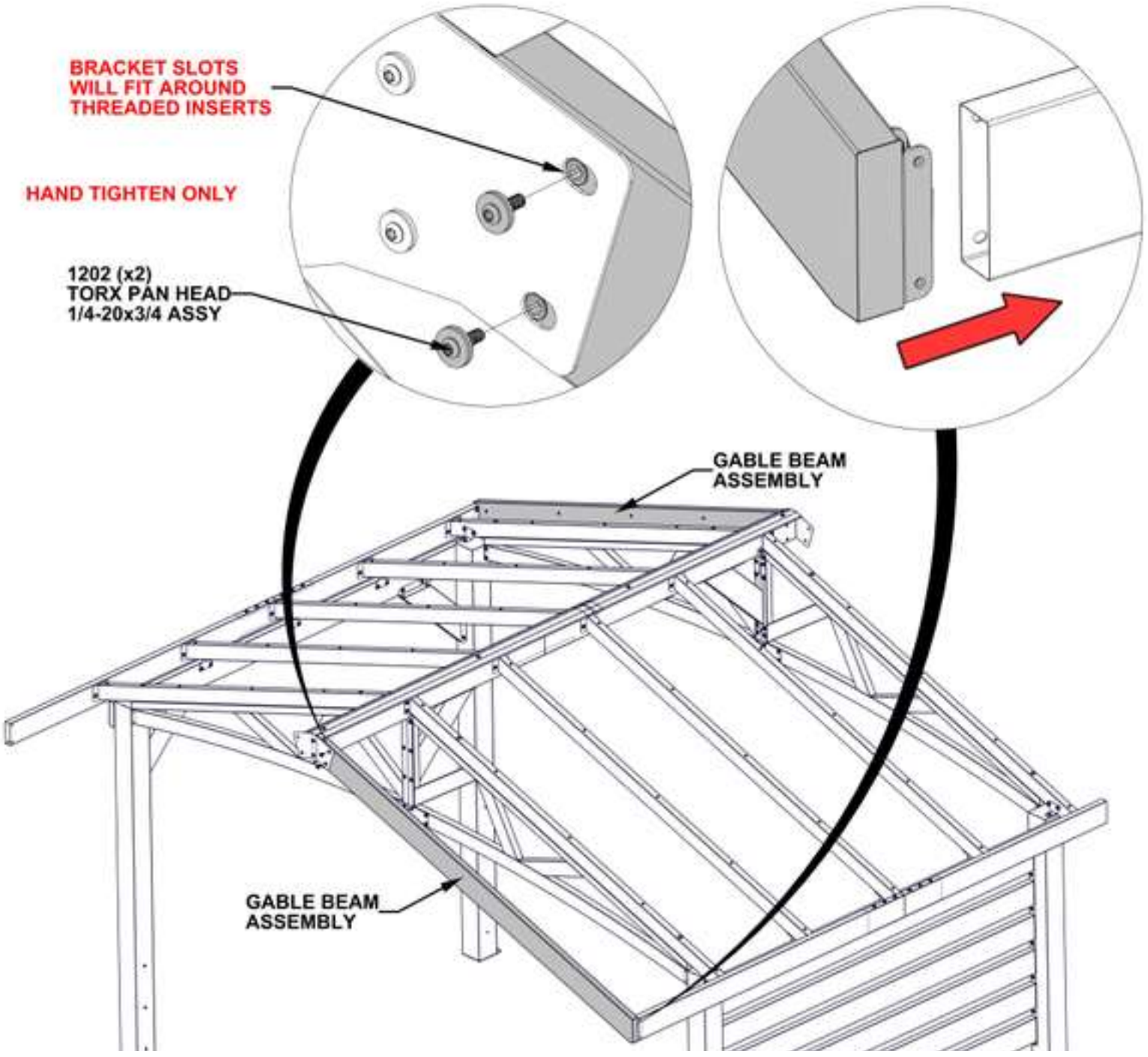

STEP 39B - ROOF ASSEMBLY

QTY	PART NUMBER	DESCRIPTION
8	H101202	TORX PAN HEAD 1/4-20x3/4 ASSY

- REPEAT THIS STEP TWICE FOR BOTH SIDES OF STRUCTURE

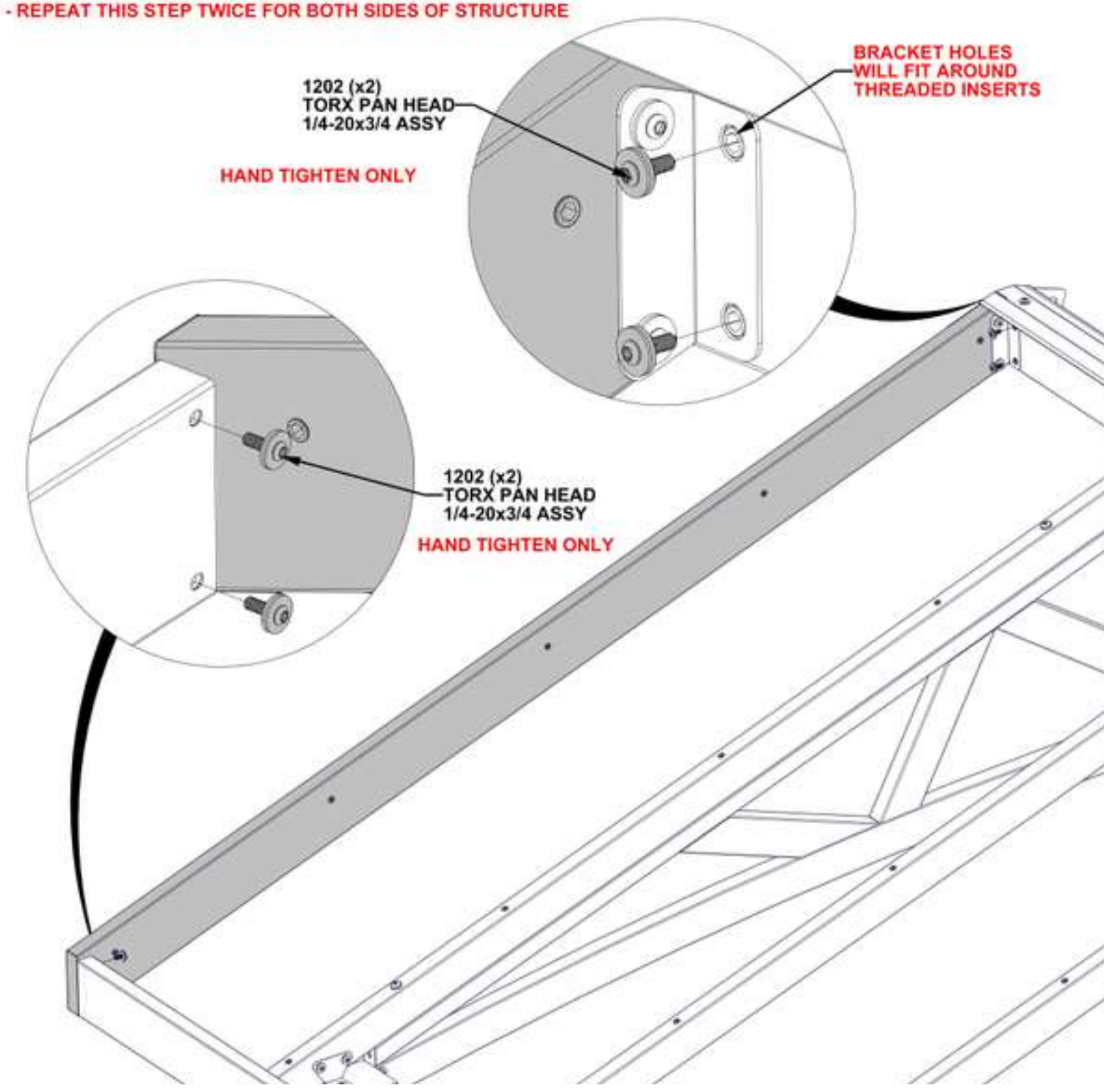

STEP 40 - ROOF ASSEMBLY

QTY	PART NUMBER	DESCRIPTION
4	H101202	TORX PAN HEAD 1/4-20x3/4 ASSY

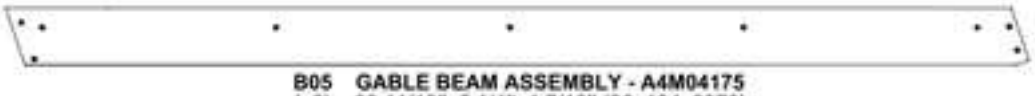

B05 GABLE BEAM ASSEMBLY - A4M04175
(x2) 93 11/16"x5 1/4"x1 7/16" (36x134x2379)



J9 BEAM BRACKET - A4M03807
(x2) 5 9/16"x1 5/16"x4 9/16" (140.57x33.20x116)

- REPEAT THIS STEP TWICE

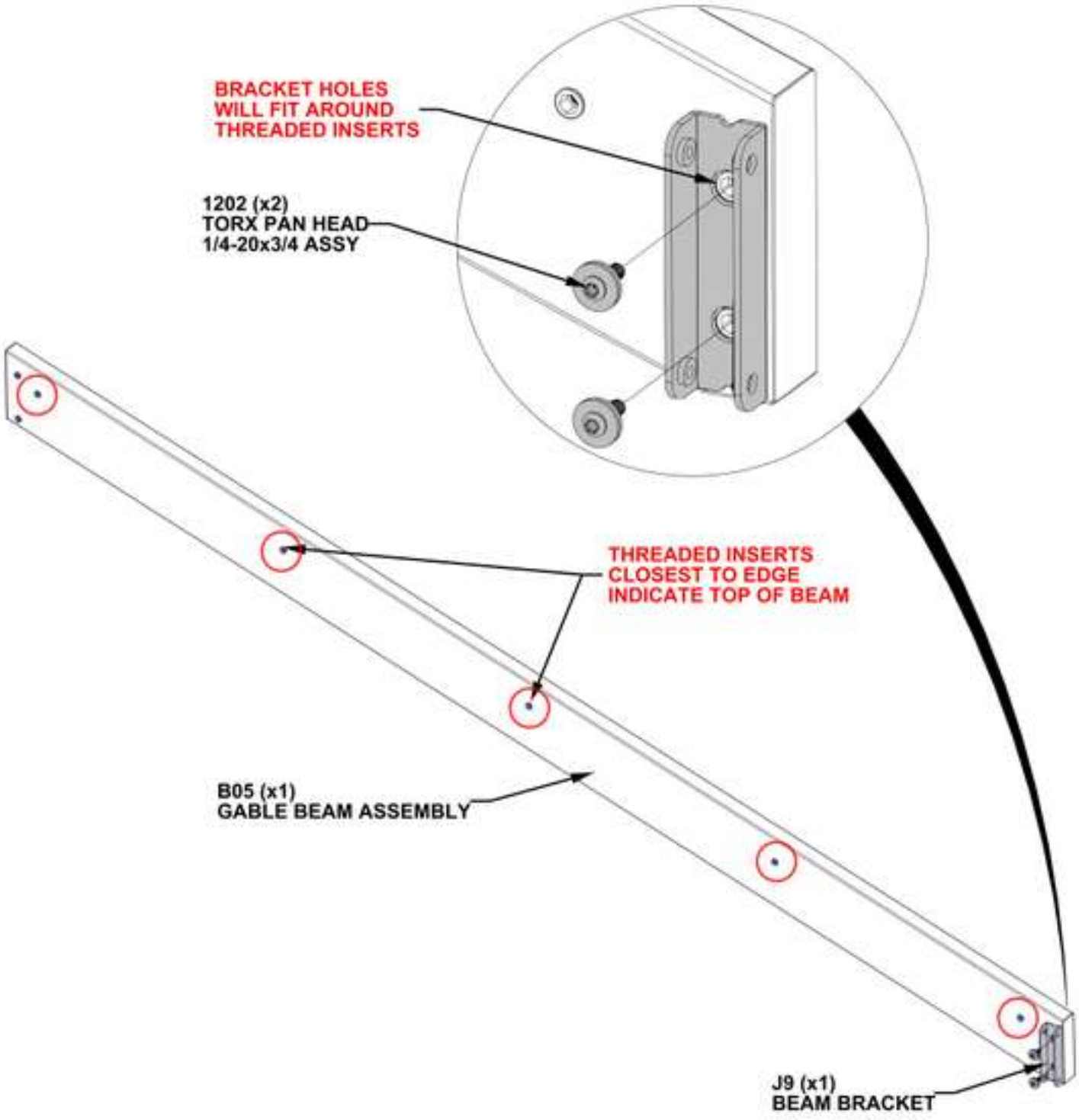

STEP 41 - ROOF ASSEMBLY



J8 GABLE BRACKET - A4M03804
(x2) 4 13/16"x1 9/16"x1 9/16" (40x40x123)

QTY	PART NUMBER	DESCRIPTION
4	H101202	TORX PAN HEAD 1/4-20x3/4 ASSY

- REPEAT THIS STEP TWICE

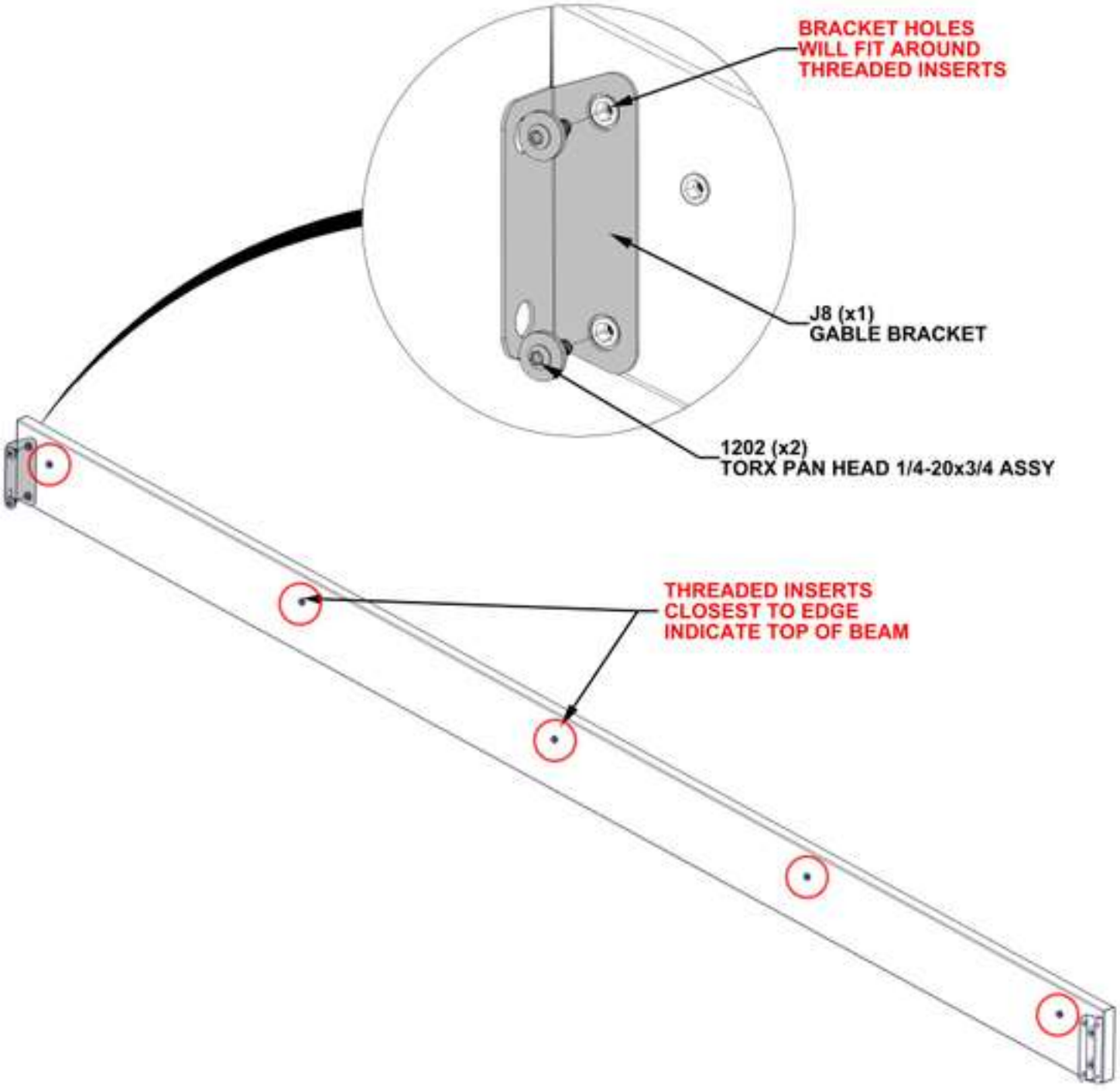

STEP 42A - ROOF ASSEMBLY

QTY	PART NUMBER	DESCRIPTION
4	H101202	TORX PAN HEAD 1/4-20x3/4 ASSY

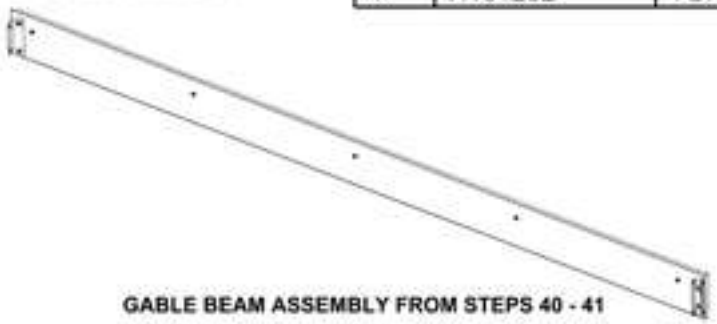

GABLE BEAM ASSEMBLY FROM STEPS 40 - 41

- WITH AT LEAST TWO ADDITIONAL PEOPLE, ATTACH GABLE BEAM ASSEMBLIES.
- REPEAT THIS STEP TWICE FOR BOTH SIDES OF STRUCTURE.
- GABLE BEAM ASSEMBLIES WILL BE ATTACHED ON OPPOSITE SIDES OF ROOF STRUCTURE.

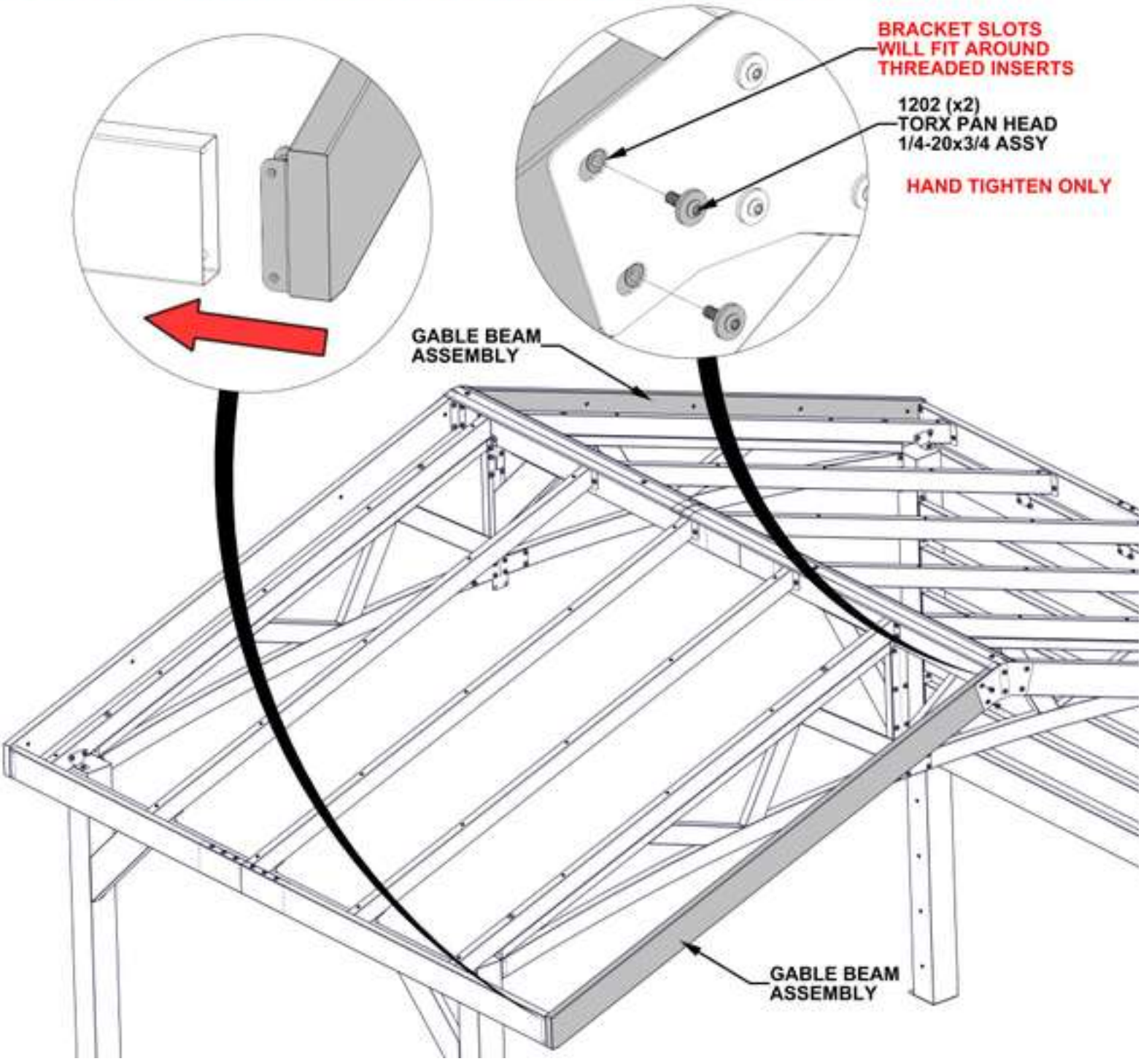

STEP 42B - ROOF ASSEMBLY

QTY	PART NUMBER	DESCRIPTION
8	H101202	TORX PAN HEAD 1/4-20x3/4 ASSY

- REPEAT THIS STEP TWICE FOR BOTH SIDES OF STRUCTURE

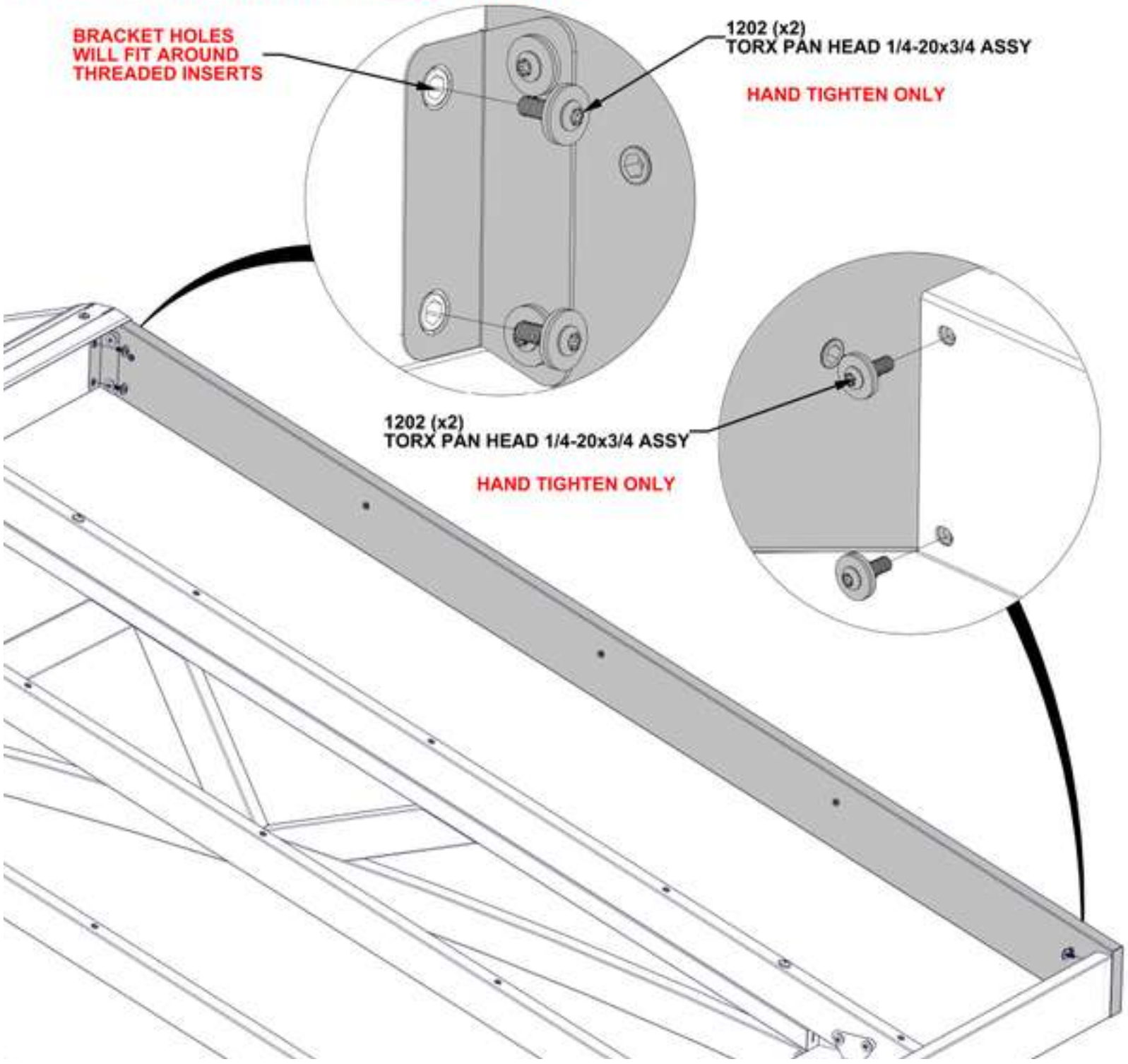

STEP 43 - PURLIN ASSEMBLY



E01 PURLIN ASSEMBLY - A4M04180
(x10) 71 5/16"x1 15/16"x1 9/16" (40x50x1812)



A6P00530 2-WAY SQUARE PLUG
(x10)

- COMPLETE THIS STEP TEN TIMES.
- USE A RUBBER MALLET TO TAP 2-WAY SQUARE PLUG INTO END OF PURLIN.

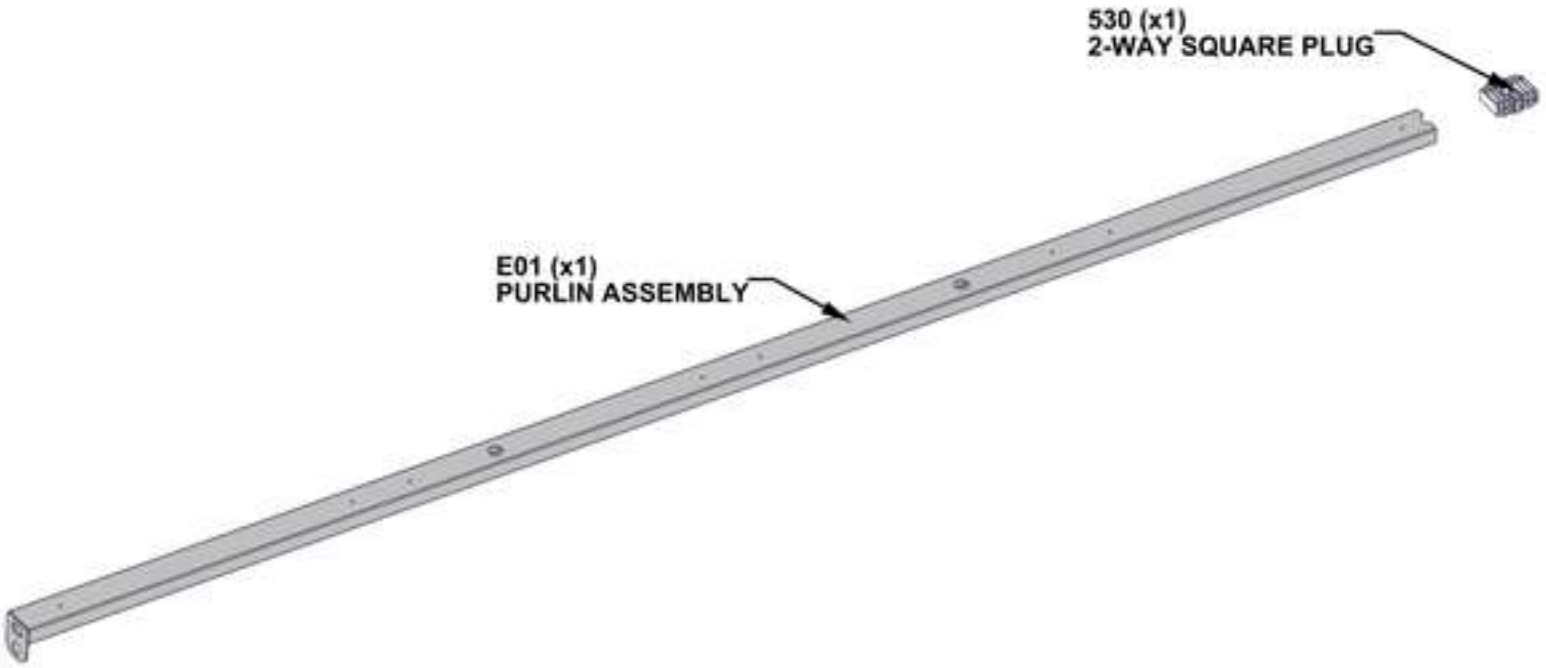

STEP 44 - PURLIN ASSEMBLY



E02 PURLIN ASSEMBLY - A4M04181
(x10) 53 15/16"x1 15/16"x1 9/16" (40x50x1370)

- COMPLETE THIS STEP TEN TIMES.
- USE A RUBBER MALLET TO TAP ENDS OF EACH PURLIN UNTIL TIGHT AGAINST 2-WAY PLUG.

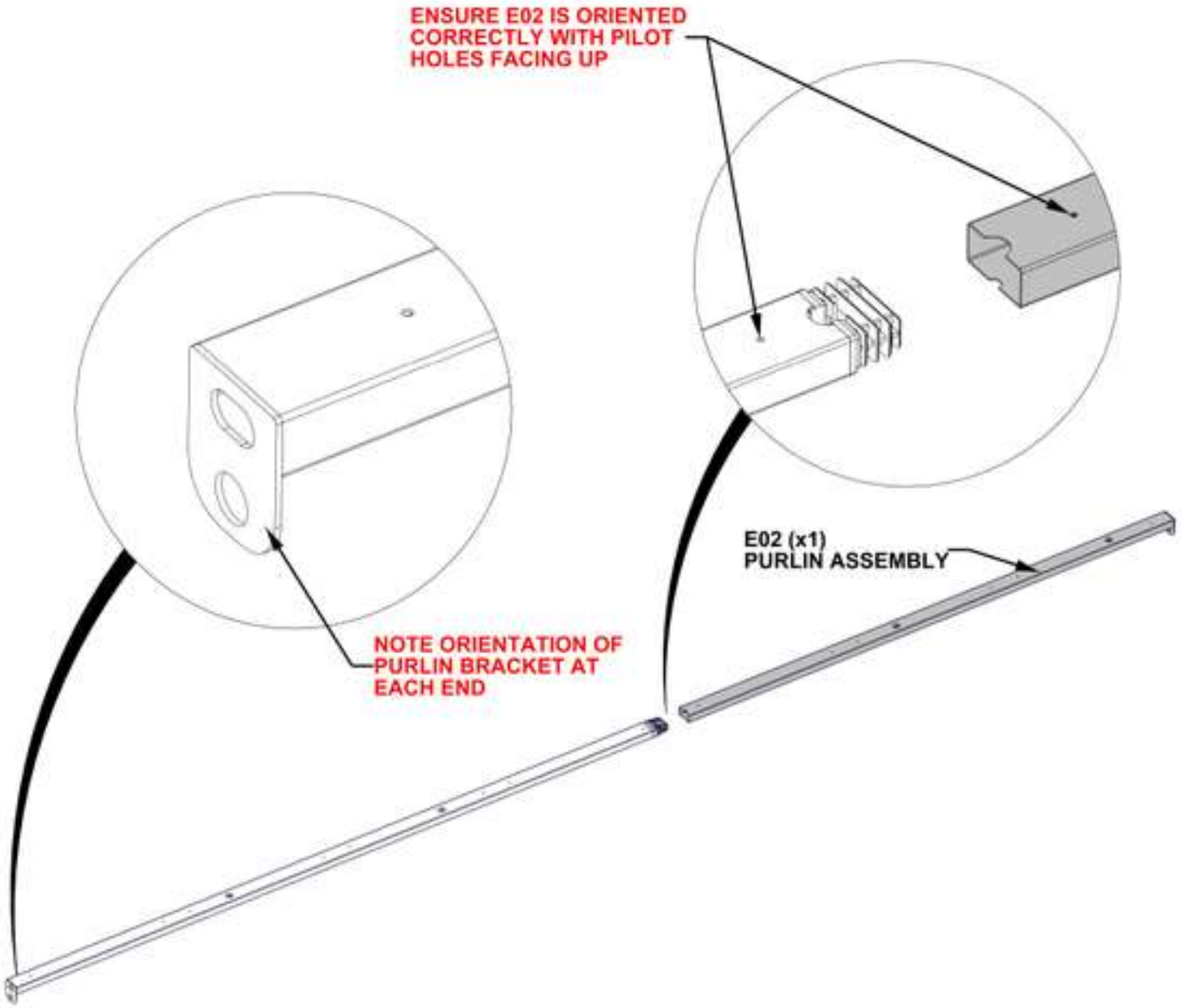

STEP 45A - ROOF ASSEMBLY

QTY	PART NUMBER	DESCRIPTION
50	H101132	TORX SOCKET SCREW SHORT 1/4-20



PURLIN ASSEMBLY FROM
STEPS 43 - 44 (x10)

- MAKE SURE MIDDLE OF PURLIN ASSEMBLY IS SUPPORTED WHEN LIFTING.
- ALIGN ALL PURLIN JOINTS ALONG THE THIRD RAFTER FROM THE BACK.
- STARTING AT THE RIDGE AND WORKING DOWN WILL MAKE IT EASIER TO INSTALL PURLIN ASSEMBLIES.

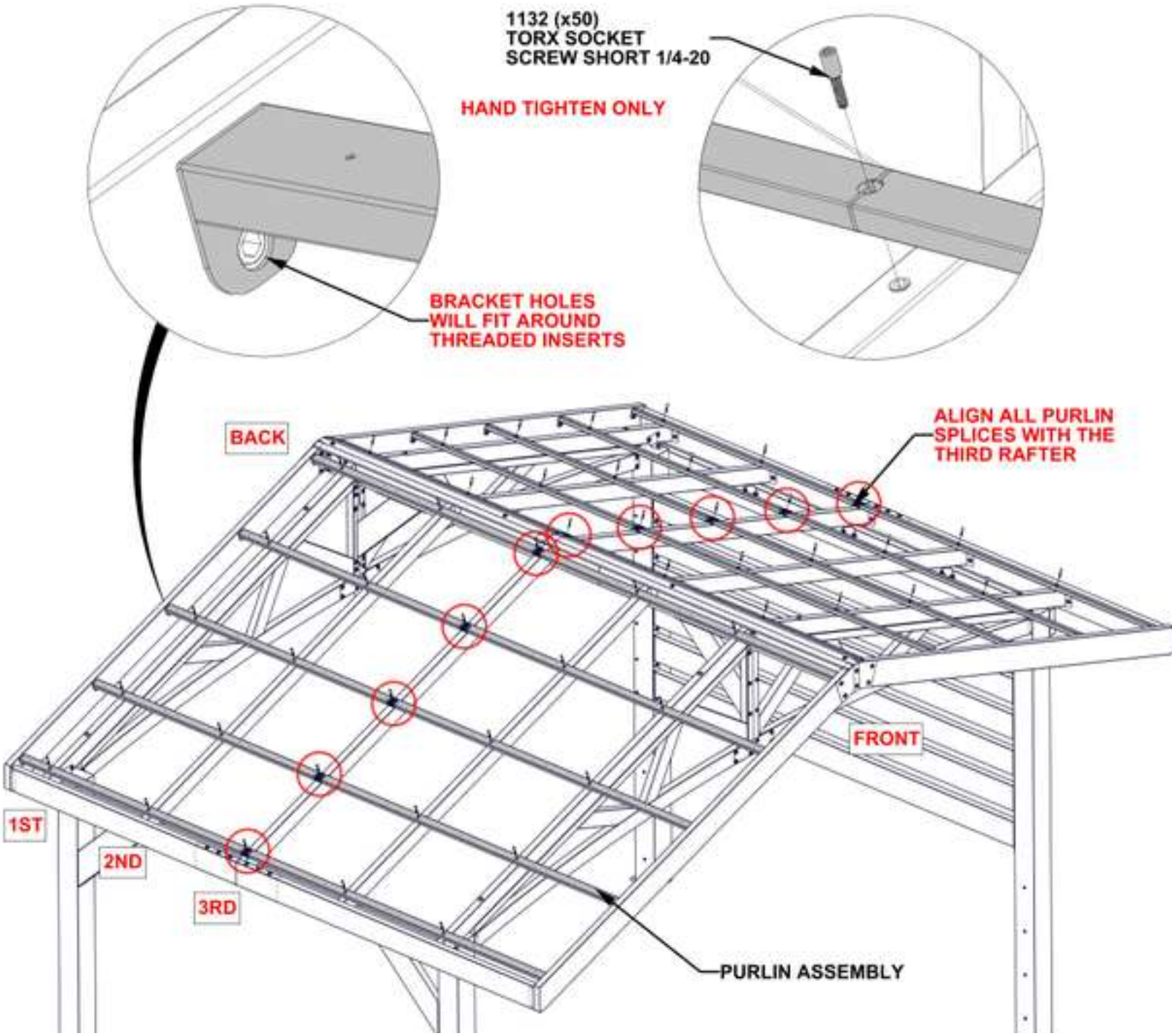

STEP 45B - ROOF ASSEMBLY

QTY	PART NUMBER	DESCRIPTION
20	H101202	TORX PAN HEAD 1/4-20x3/4 ASSY

- ONCE PURLINS HAVE BEEN INSTALLED, TIGHTEN ALL HARDWARE FROM PREVIOUS STEPS.

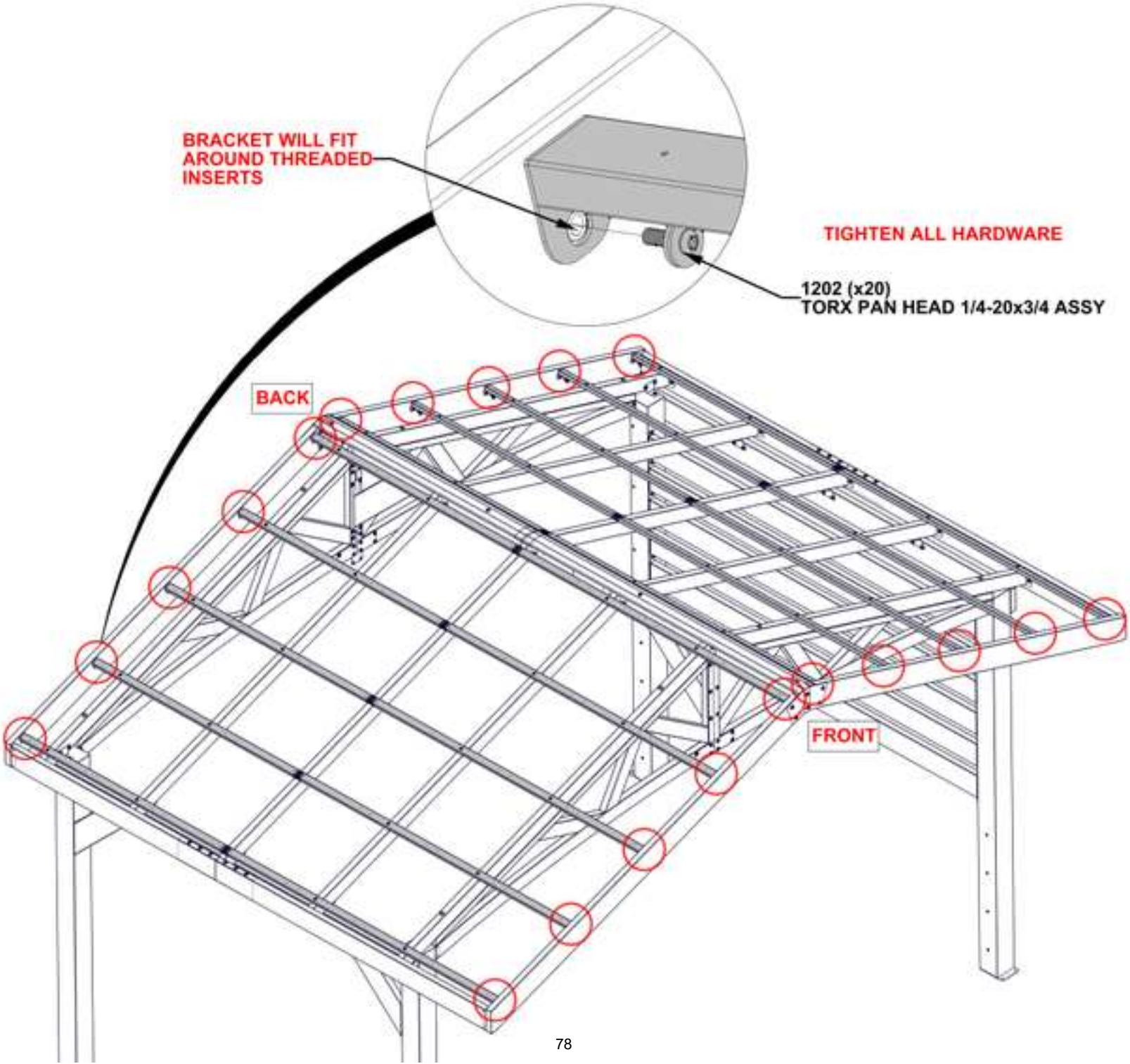

STEP 46 - ROOF ASSEMBLY

QTY	PART NUMBER	DESCRIPTION
10	H101117	SCREW WOODGRIP 10-16x3/4" BLK



A4M04182 STEEL SHEETING
(x1)

- REMOVE PROTECTIVE FILM.
- SLIDE ROOF SHEET UP, MAKING SURE IT SLIDES UNDERNEATH THE RIDGE CAP.
- STARTING AT THE LEFT SIDE AND WORKING TO THE RIGHT, LINE UP THE HOLES IN THE ROOF SHEET WITH THE PILOT HOLES IN THE PURLINS.
- WARNING: GLOVES ARE RECOMMENDED WHEN HANDLING STEEL ROOF PIECES.

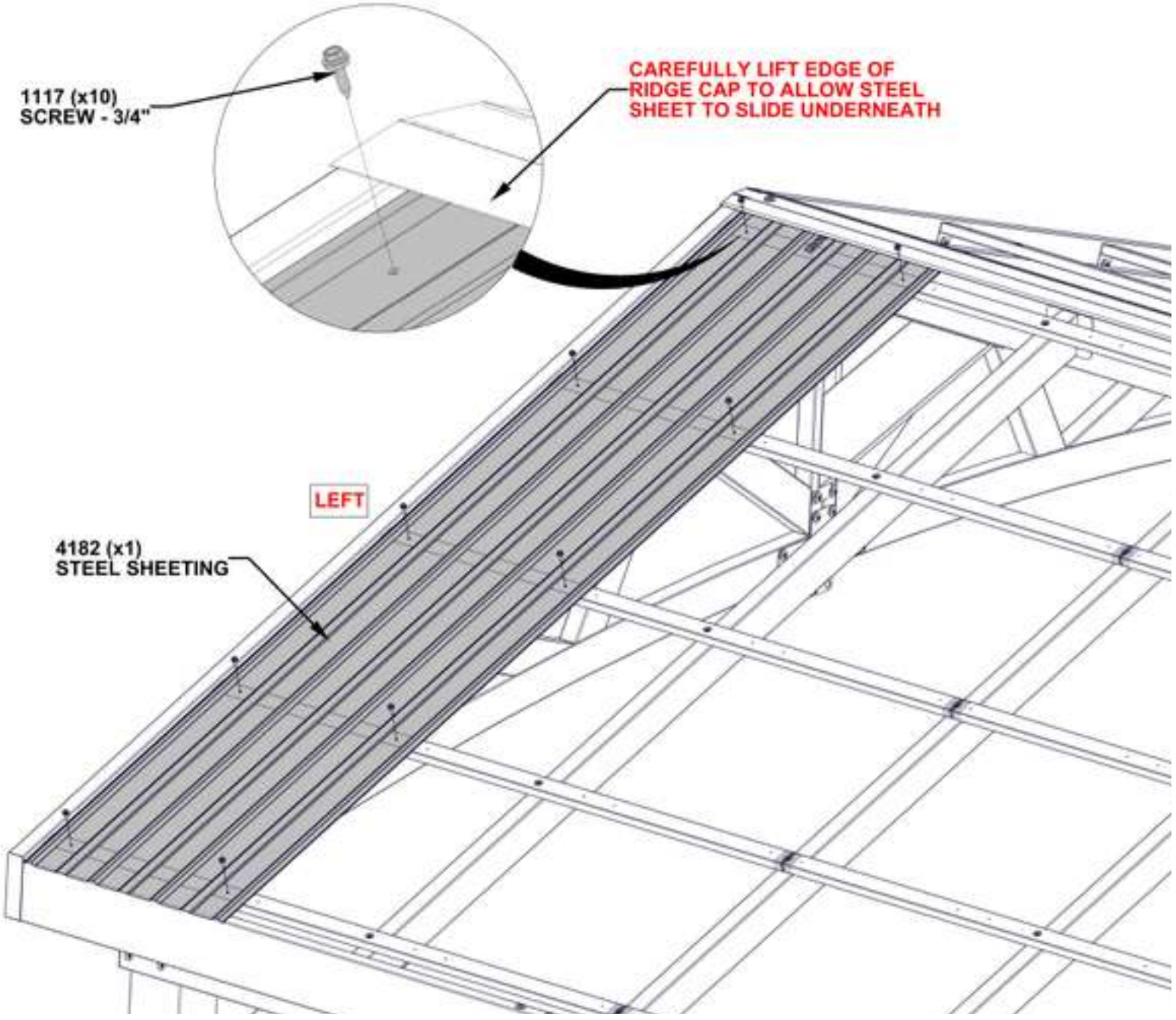

STEP 47 - ROOF ASSEMBLY

QTY	PART NUMBER	DESCRIPTION
10	H101117	SCREW WOODGRIP 10-16x3/4" BLK



A4M04182 STEEL SHEETING
(x1)

- REMOVE PROTECTIVE FILM.
- SLIDE ROOF SHEET UP, MAKING SURE IT SLIDES UNDERNEATH THE RIDGE CAP.
- STARTING AT THE LEFT SIDE AND WORKING TO THE RIGHT, LINE UP THE HOLES IN THE ROOF SHEET WITH THE PILOT HOLES IN THE PURLINS.
- WARNING: GLOVES ARE RECOMMENDED WHEN HANDLING STEEL ROOF PIECES.

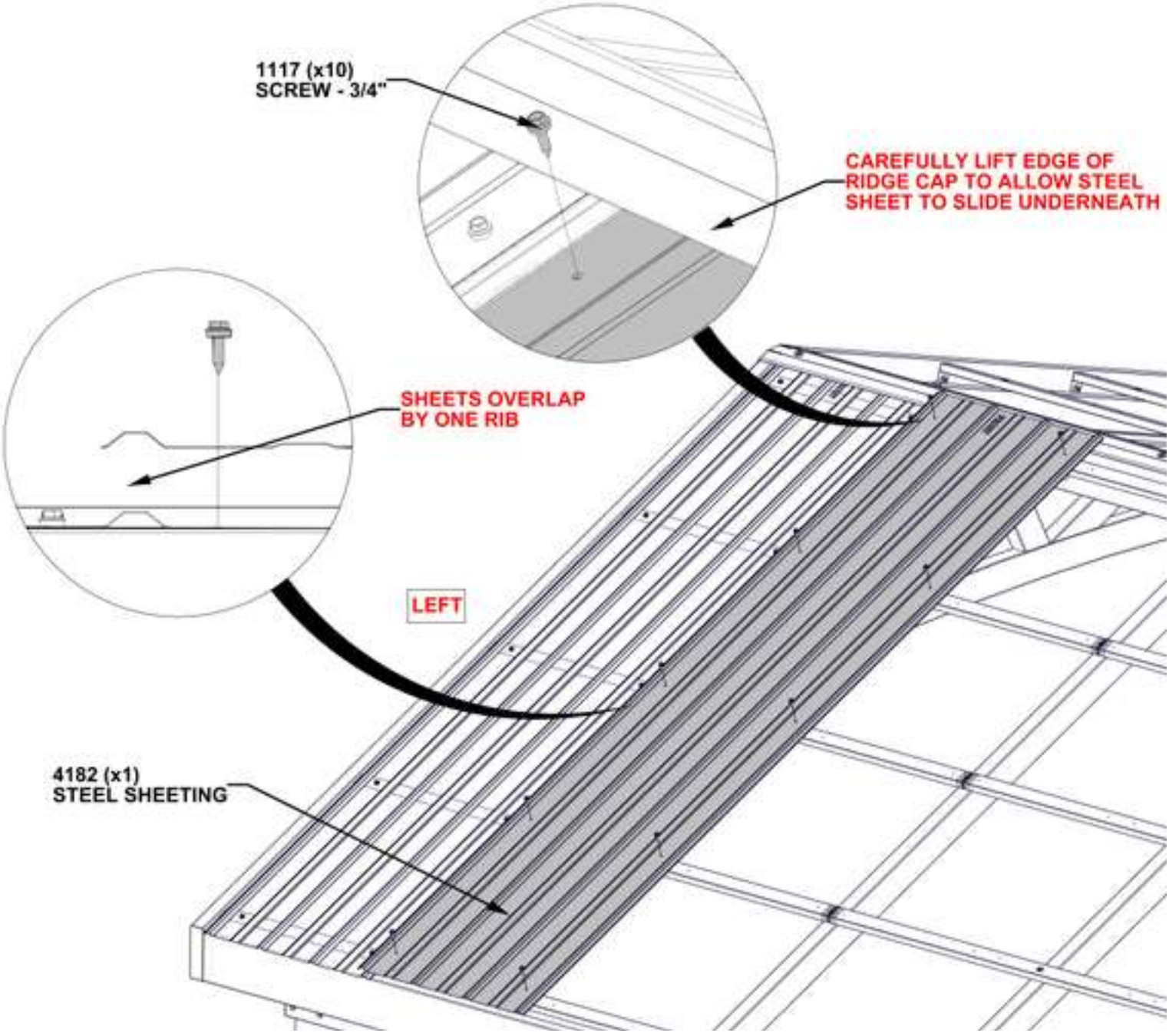

STEP 48 - ROOF ASSEMBLY

QTY	PART NUMBER	DESCRIPTION
50	H101117	SCREW WOODGRIP 10-16x3/4" BLK



A4M04182 STEEL SHEETING
(x5)

- REMOVE PROTECTIVE FILM.
- INSTALL FIVE SHEETS IN THE SAME WAY AS THE FIRST TWO.
- ATTACH AND FULLY TIGHTEN ALL SCREWS ON EACH ROOF SHEET BEFORE ATTACHING THE NEXT ONE. THIS MAKES IT POSSIBLE TO REACH ALL THE SCREWS WITHOUT GETTING ON THE ROOF.
- LINE UP THE PILOT HOLES IN THE ROOF SHEET WITH THE PILOT HOLES IN THE PURLINS.
- WARNING: GLOVES ARE RECOMMENDED WHEN HANDLING STEEL ROOF PIECES.

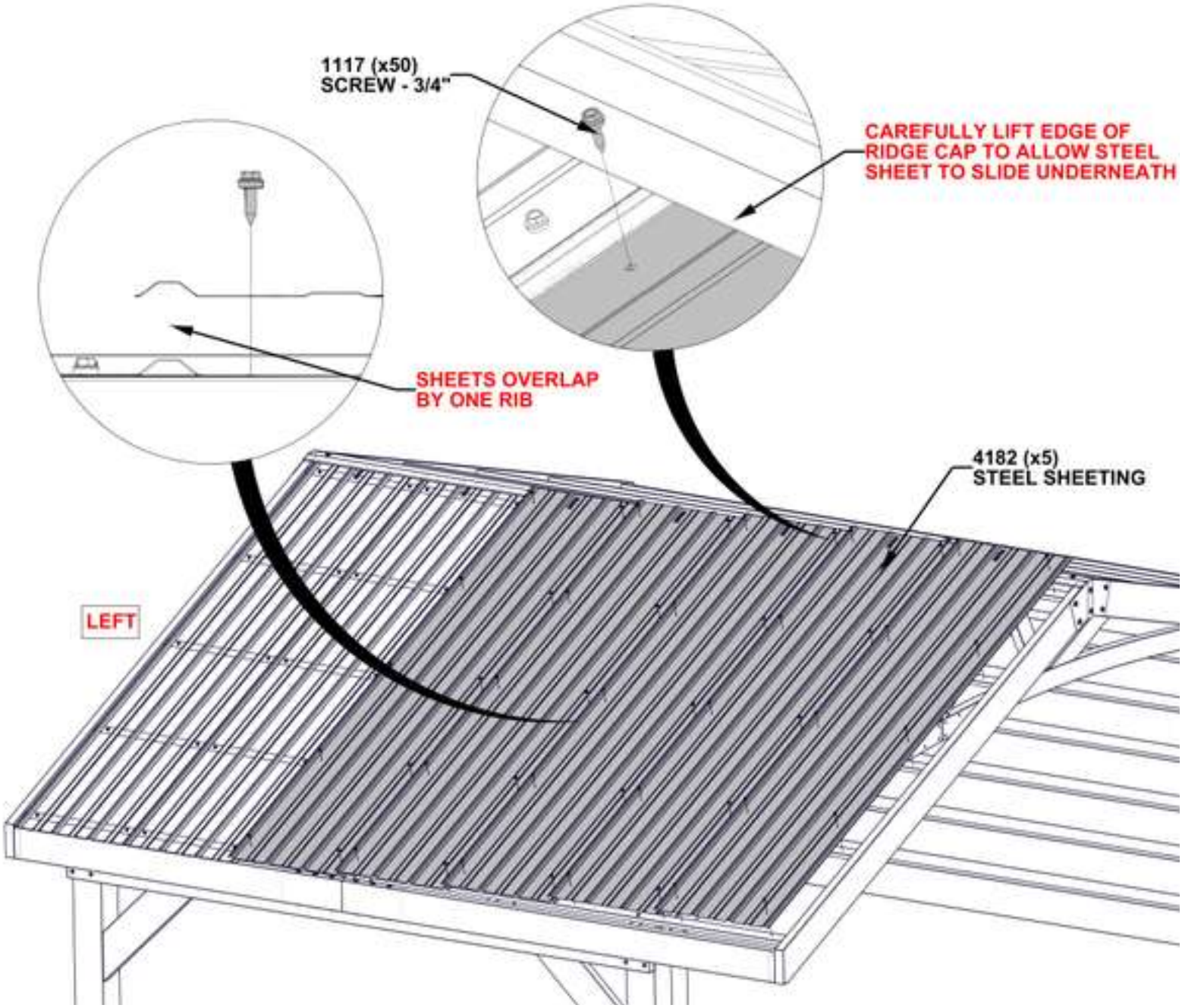

STEP 49 - ROOF ASSEMBLY

QTY	PART NUMBER	DESCRIPTION
8	H101116	SCREW SELF TAPPING 1/4x1 BLK

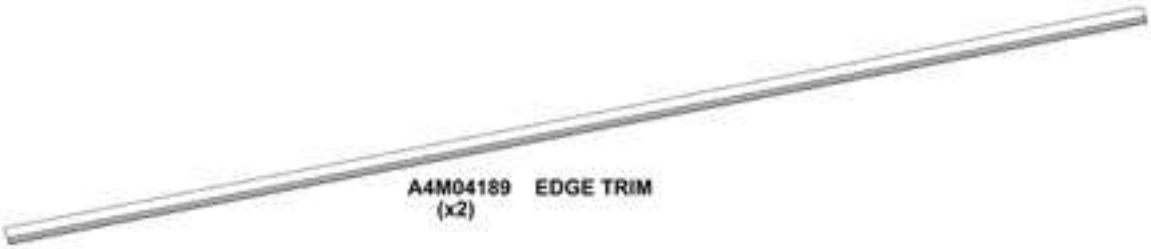

A4M04189 EDGE TRIM
(x2)

- REMOVE PROTECTIVE FILM.
- SLIDE EDGE TRIM UNTIL ONE END IS POSITIONED UNDERNEATH RIDGE CAP AND OTHER END IS FLUSH WITH END.
- STARTING AT THE TOP. ALIGN SCREWS WITH SHEET SCREWS.
- DUE TO MULTIPLE LAYERS OF METAL ON THE DRIP EDGE, IT IS RECOMMENDED THAT A 1/8" (3mm) DRILL BIT BE USED TO CREATE STARTER HOLES.
- WARNING: GLOVES ARE RECOMMENDED WHEN HANDLING STEEL ROOF PIECES.

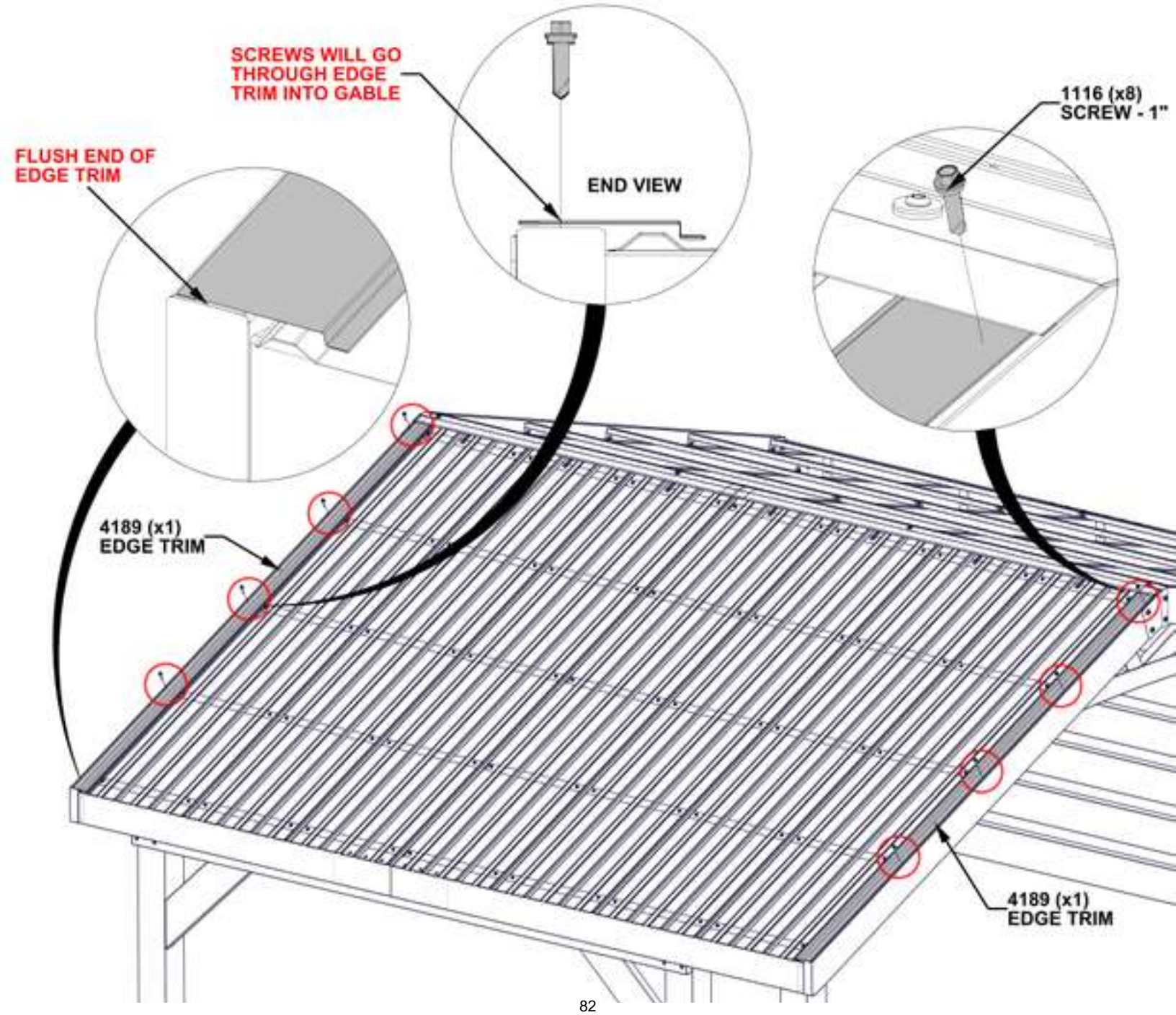

STEP 50A - ROOF ASSEMBLY

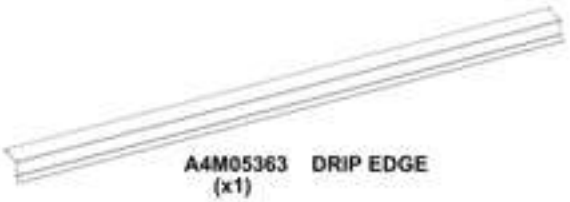

A4M05363 DRIP EDGE
(x1)

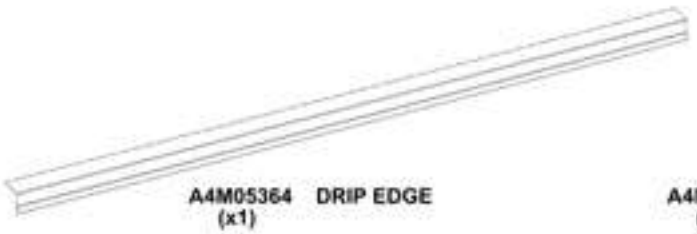

A4M05364 DRIP EDGE
(x1)



A4M05365 DRIP EDGE SPLICE
(x1)

- REMOVE PROTECTIVE FILM.
- ORIENT DRIP EDGE AND SPLICE AS SHOWN BELOW.
- STARTING IN THE FRONT CORNER, ATTACH SCREWS SPACING EVERY OTHER RIB.
- WARNING: GLOVES ARE RECOMMENDED WHEN HANDLING STEEL ROOF PIECES.

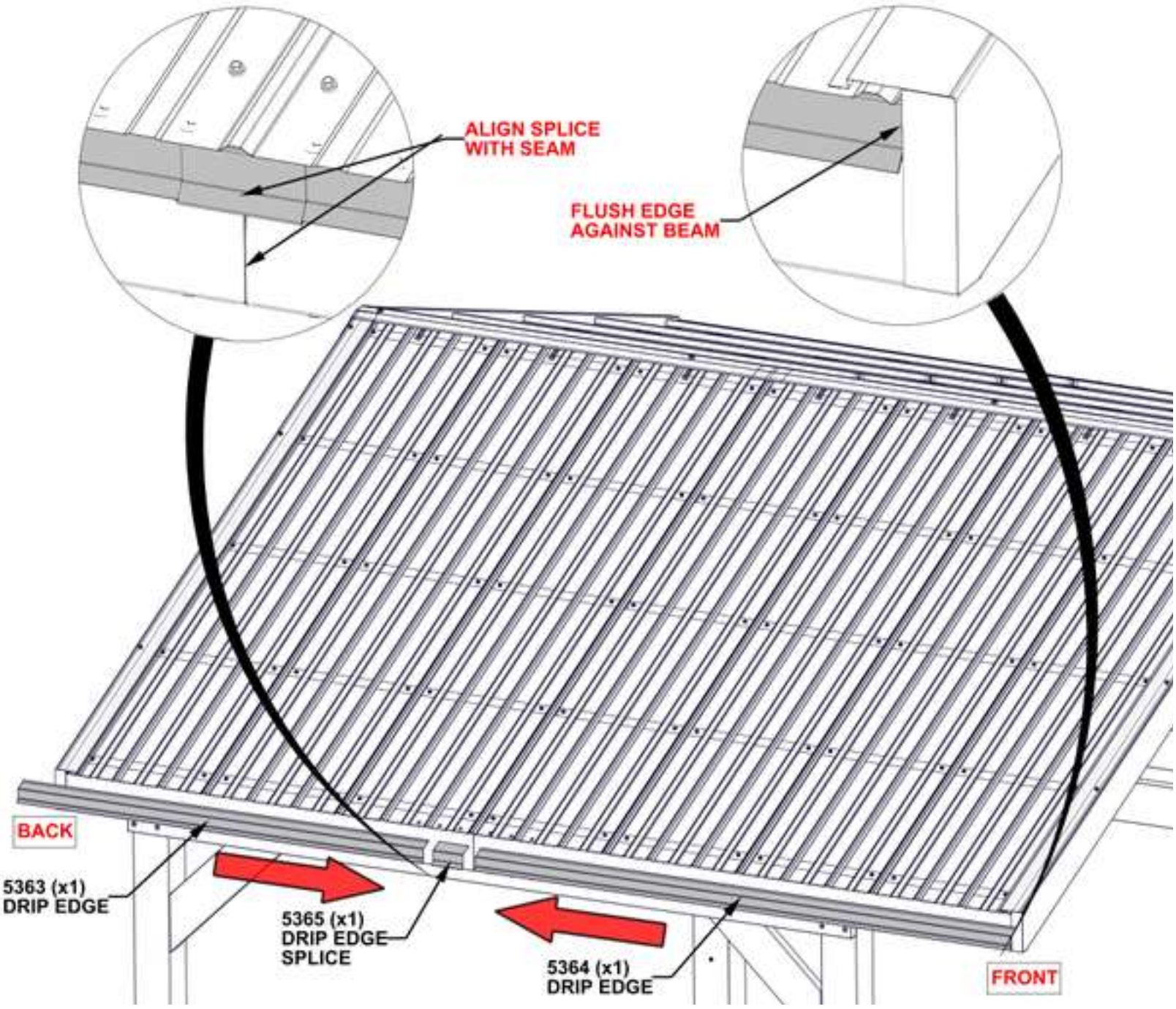

STEP 50B - ROOF ASSEMBLY

QTY	PART NUMBER	DESCRIPTION
12	H101116	SCREW SELF TAPPING 1/4x1 BLK

- REMOVE PROTECTIVE FILM.
- ORIENT DRIP EDGE AND SPLICE AS SHOWN BELOW.
- STARTING IN THE FRONT CORNER, ATTACH SCREWS SPACING EVERY OTHE SHORT RIB.
- DUE TO MULTIPLE LAYERS OF METAL ON THE DRIP EDGE, IT IS RECOMMENDED THAT A 1/8" (3mm) DRILL BIT BE USED TO CREATE STARTER HOLES.
- WARNING: GLOVES ARE RECOMMENDED WHEN HANDLING STEEL ROOF PIECES.

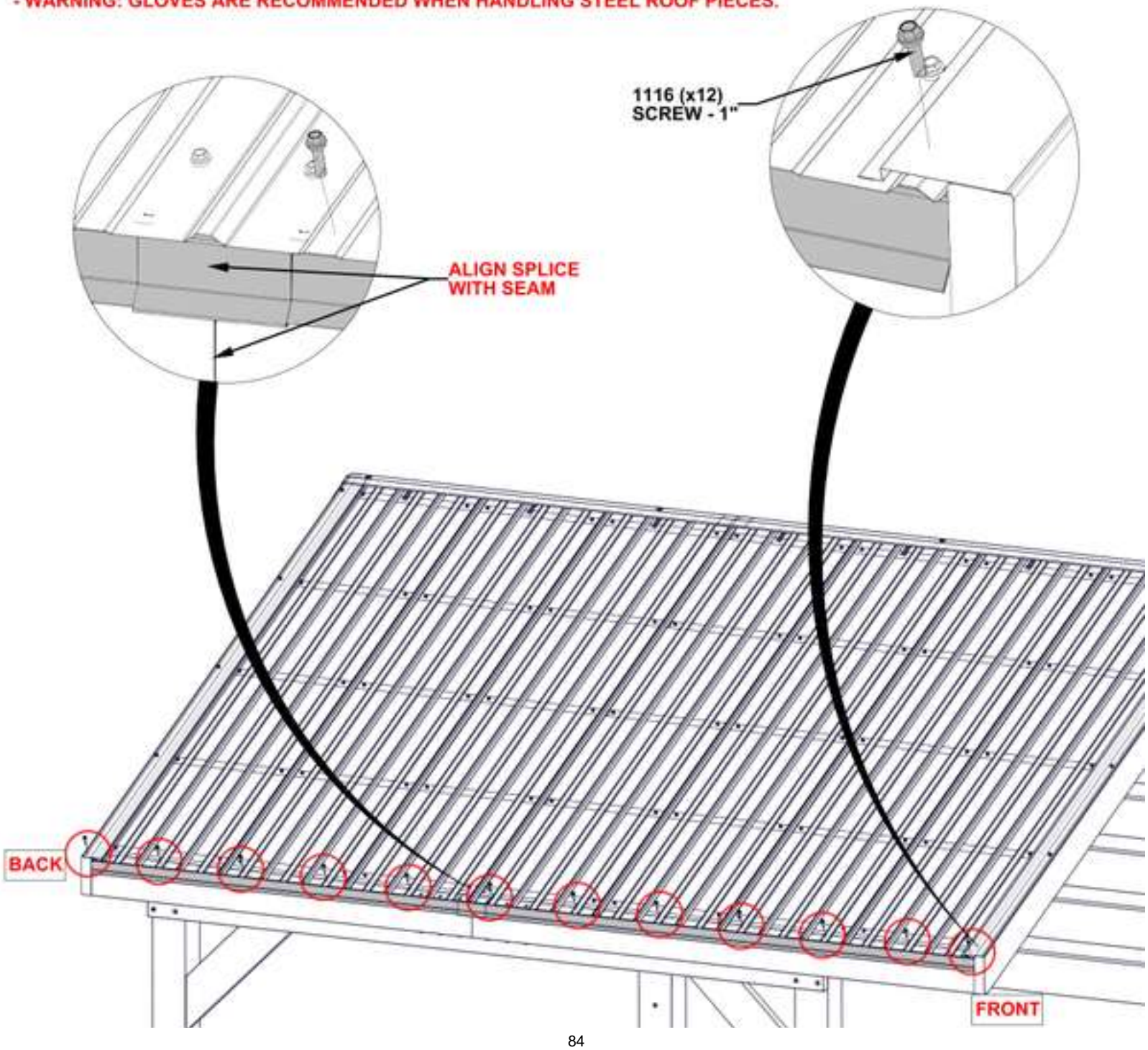

REPEAT ROOF ASSEMBLY STEPS 46 - 50
TO INSTALL SHEETMETAL ON OPPOSITE SIDE OF ROOF

STEP 51 - STRUCTURE ASSEMBLY



A4M01352 HOLE COVER
(x16)

- USE A SMALL PIECE OF WOOD AND RUBBER MALLET TO TAP HOLE COVERS IN.
- DO NOT TAP DIRECTLY WITH A HAMMER AS YOU MAY DAMAGE THE POWDER COAT FINISH ON PRODUCT.

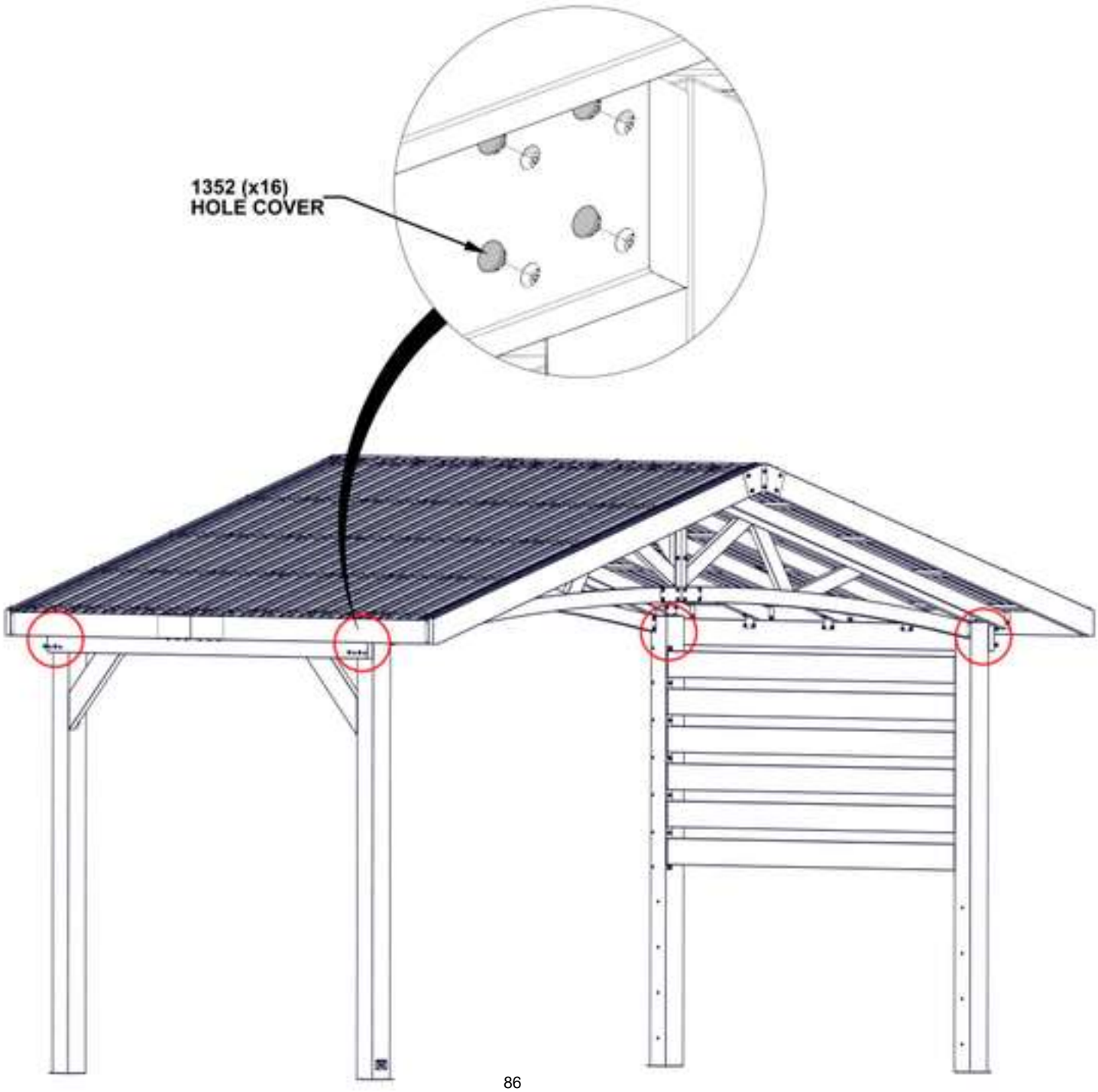

COMPLETE STEPS 52 - 121 FOR STEEL KITCHEN CABINETS

STEP 52A - SINK CABINET ASSEMBLY

QTY	PART NUMBER	DESCRIPTION
4	H101202	TORX PAN HEAD 1/4-20x3/4 ASSY



F3 SINK CABINET FLOOR PANEL ASSEMBLY - A4M04441
(x1) 36"x36"x2 5/8" (66x914x914)



G5 SINK CABINET BACK PANEL ASSEMBLY - A4M04477
(x1) 35 1/4"x8 11/16"x (220x220x896)

- POSITION FLOOR PANEL IN THE PROXIMITY OF WHERE YOUR KITCHEN WILL BE.
- EACH FLOOR PANEL HAS FACTORY INSTALLED ADJUSTABLE FEET. USE PROVIDED HEX DRIVER TO ADJUST EACH FOOT UNTIL PANEL IS LEVEL.

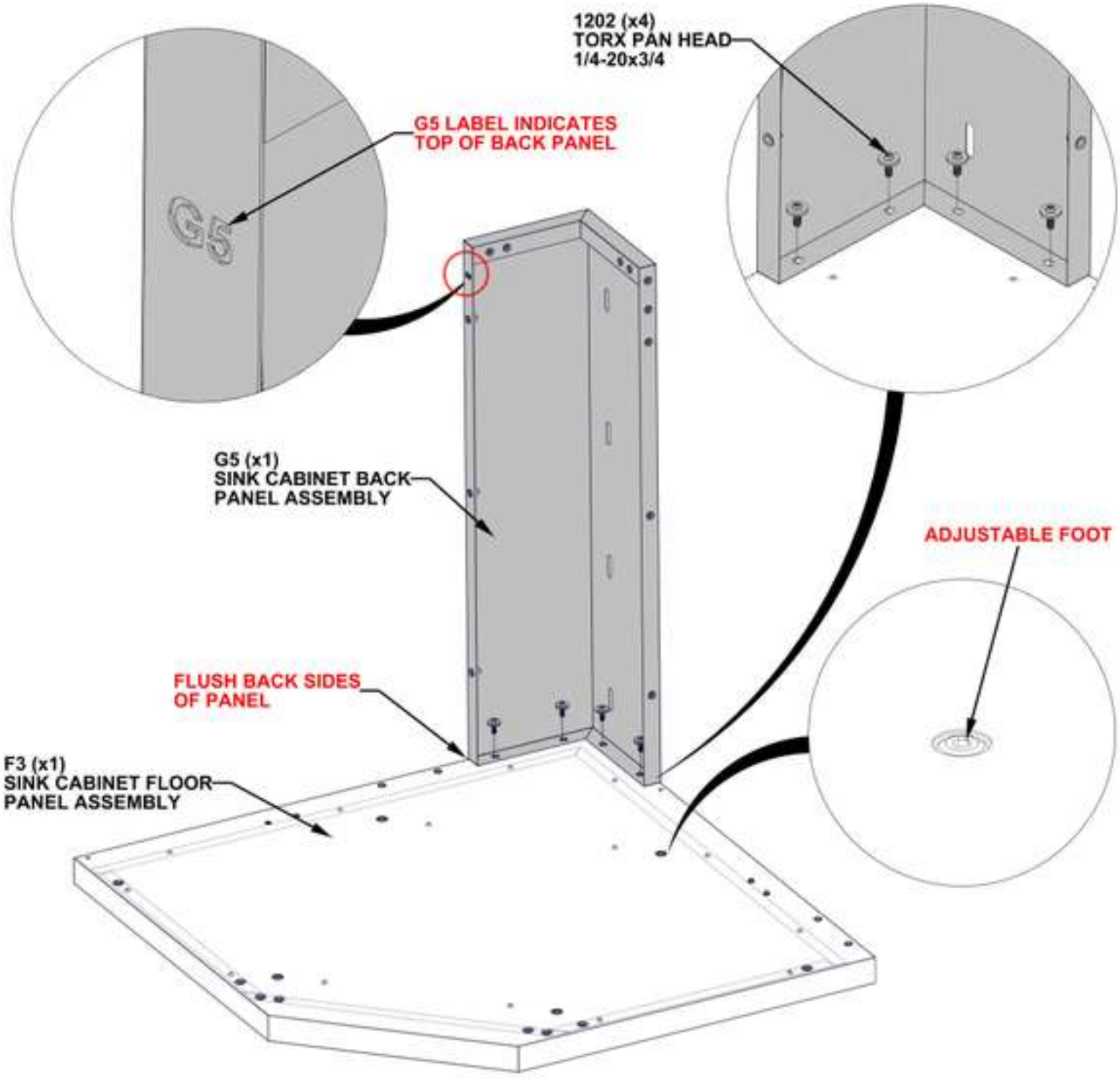

STEP 52B - SINK CABINET ASSEMBLY

QTY	PART NUMBER	DESCRIPTION
2	H101132	TORX SOCKET SCREW SHORT 1/4-20

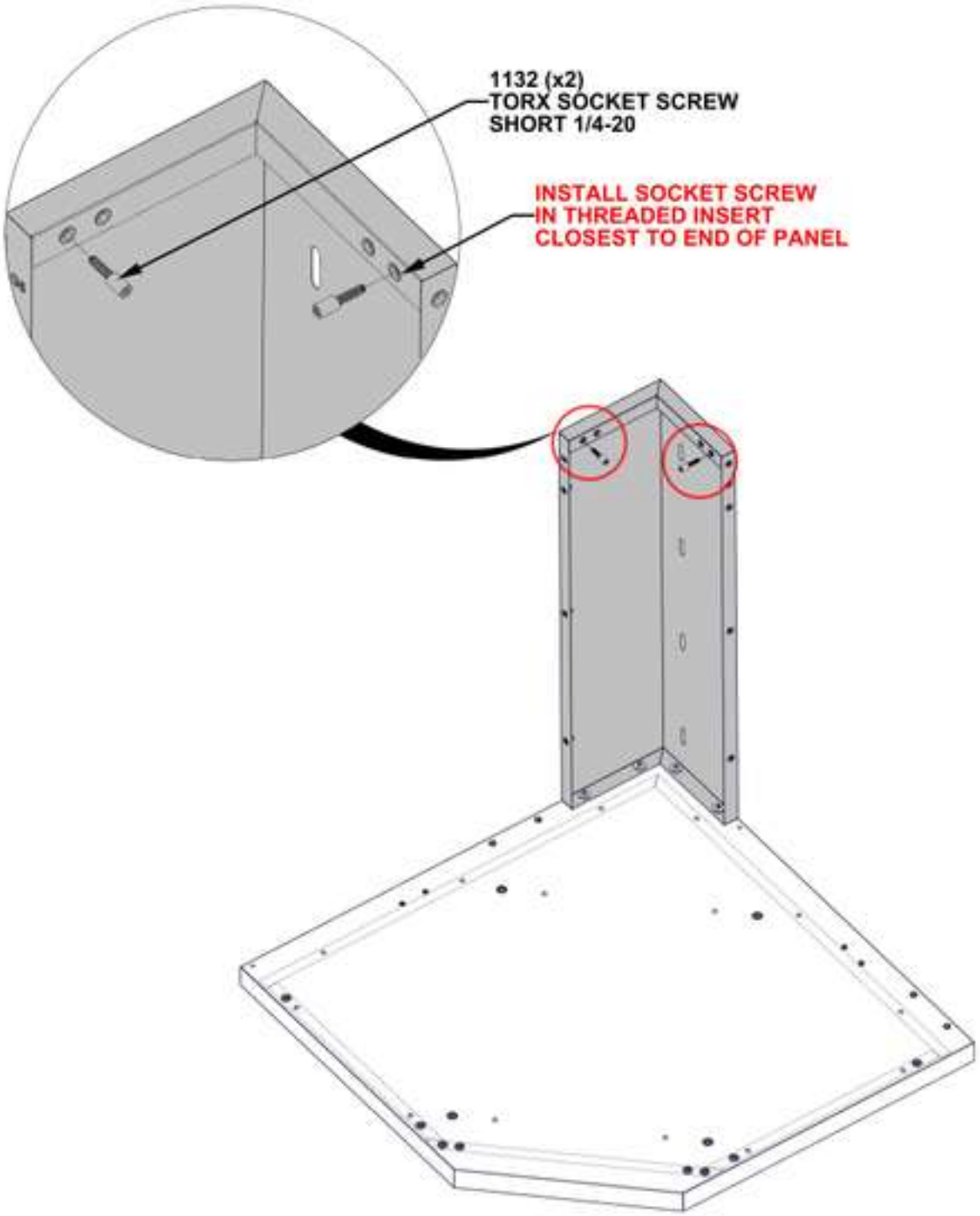

STEP 53 - SINK CABINET ASSEMBLY



QTY	PART NUMBER	DESCRIPTION
5	H101202	TORX PAN HEAD 1/4-20x3/4 ASSY

G3 SINK CABINET BACK PANEL ASSEMBLY - A4M04456
(x1) 35 1/4"x27 1/4"x1 3/16" (30x692x896)

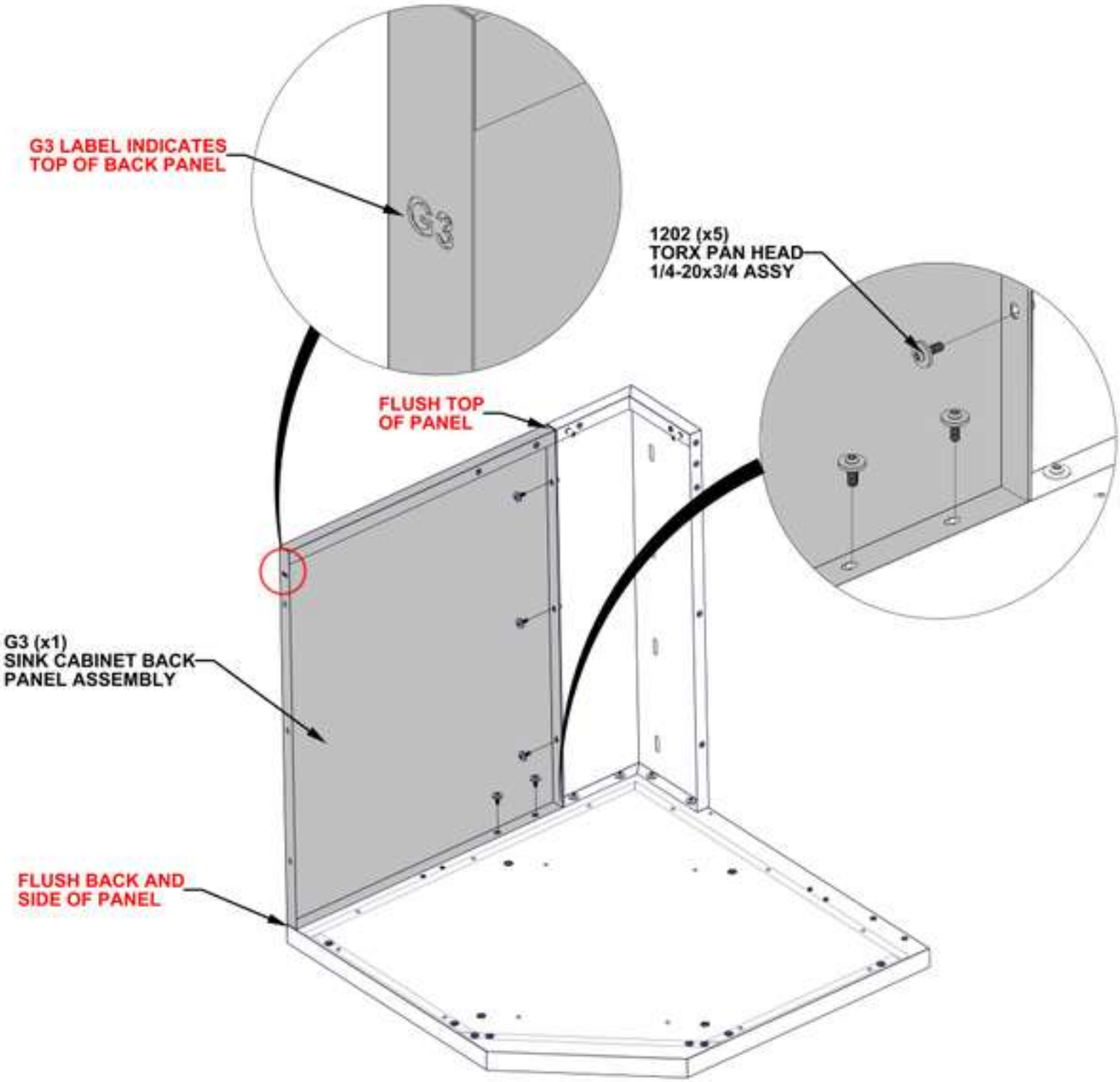

STEP 54 - SINK CABINET ASSEMBLY



G4 SINK CABINET BACK PANEL ASSEMBLY - A4M04457
(x1) 35 1/4"x8 5/8"x1 3/16" (30x218.50x896)

QTY	PART NUMBER	DESCRIPTION
2	H101202	TORX PAN HEAD 1/4-20x3/4 ASSY

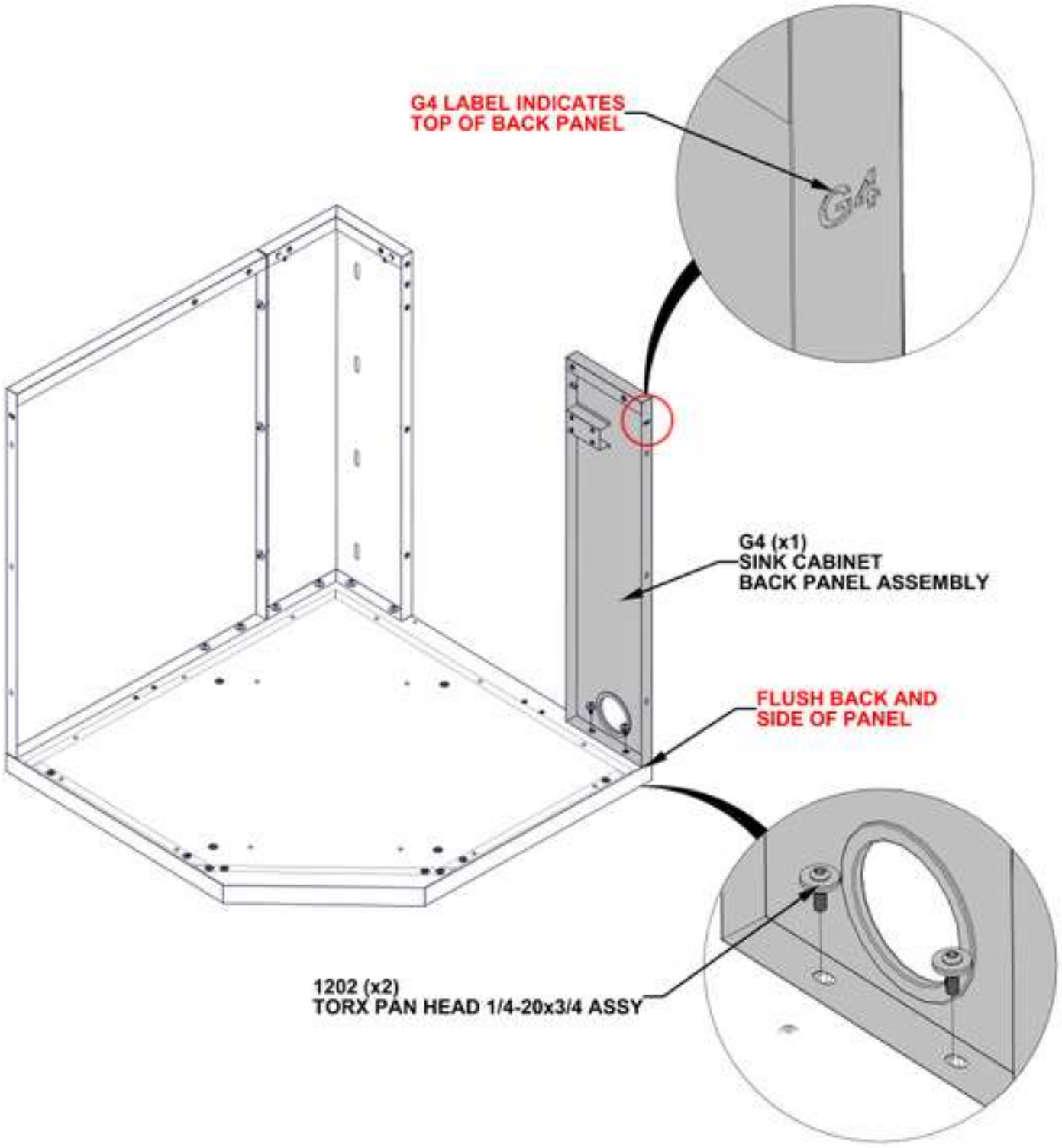

STEP 55 - SINK CABINET ASSEMBLY



H8 HORIZONTAL BEAM - A4M04478
(x1) 18 9/16"x3 15/16"x1 3/16" (30x100x472)

QTY	PART NUMBER	DESCRIPTION
4	H101202	TORX PAN HEAD 1/4-20x3/4 ASSY

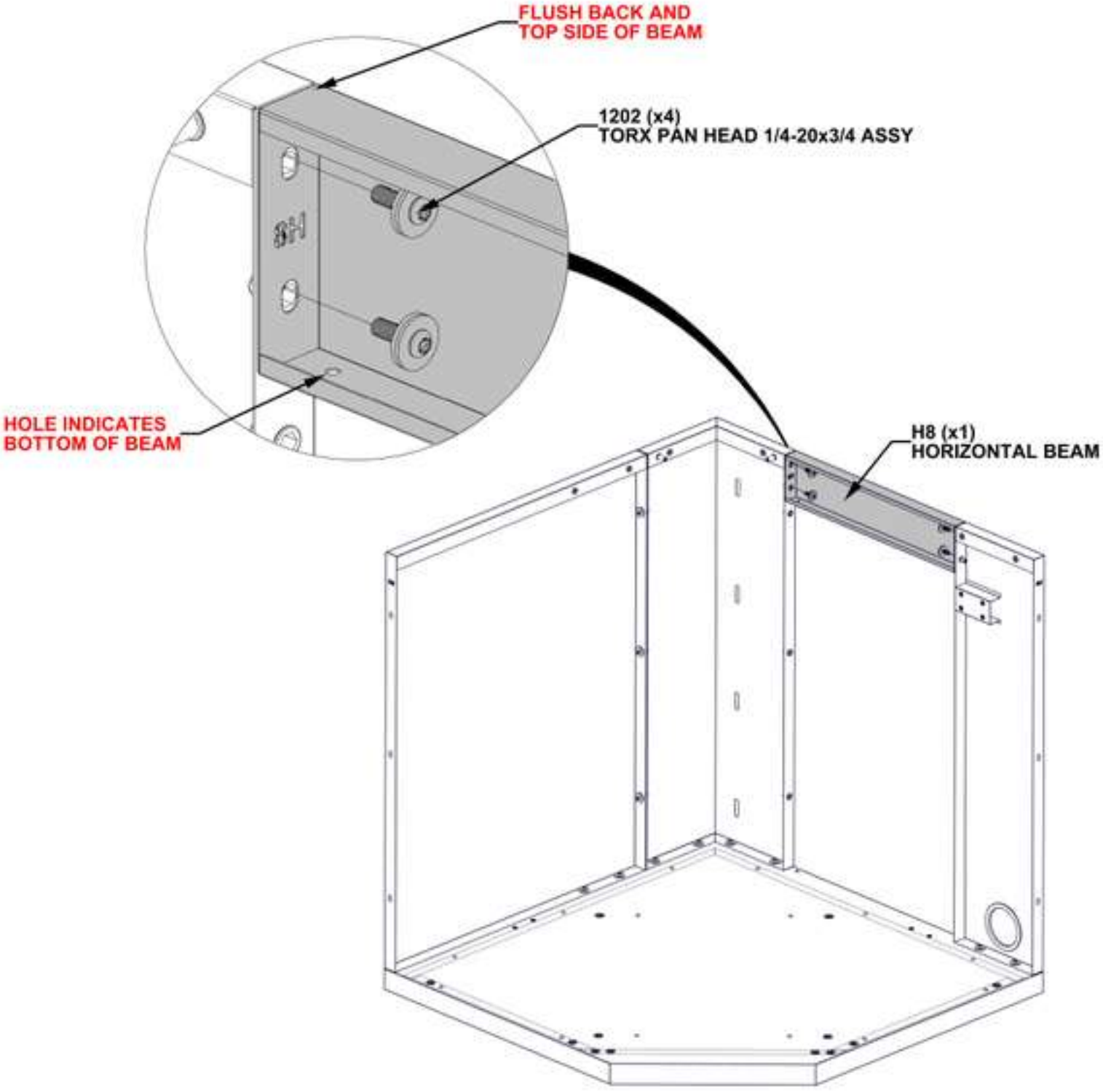

STEP 56 - SINK CABINET ASSEMBLY

QTY	PART NUMBER	DESCRIPTION
4	H101289	PAN HEAD SCREW 8-32x1/2" SS



A15 (x1) DOOR STOPPER BRACKET ASSEMBLY - A4M04480
3 15/16"x3 3/4"1 15/16" (50x95x100)



A12 (x1) DOOR STOPPER - A4M04128
3 11/16"x1 3/4"x1/2" (13.3x45x94)

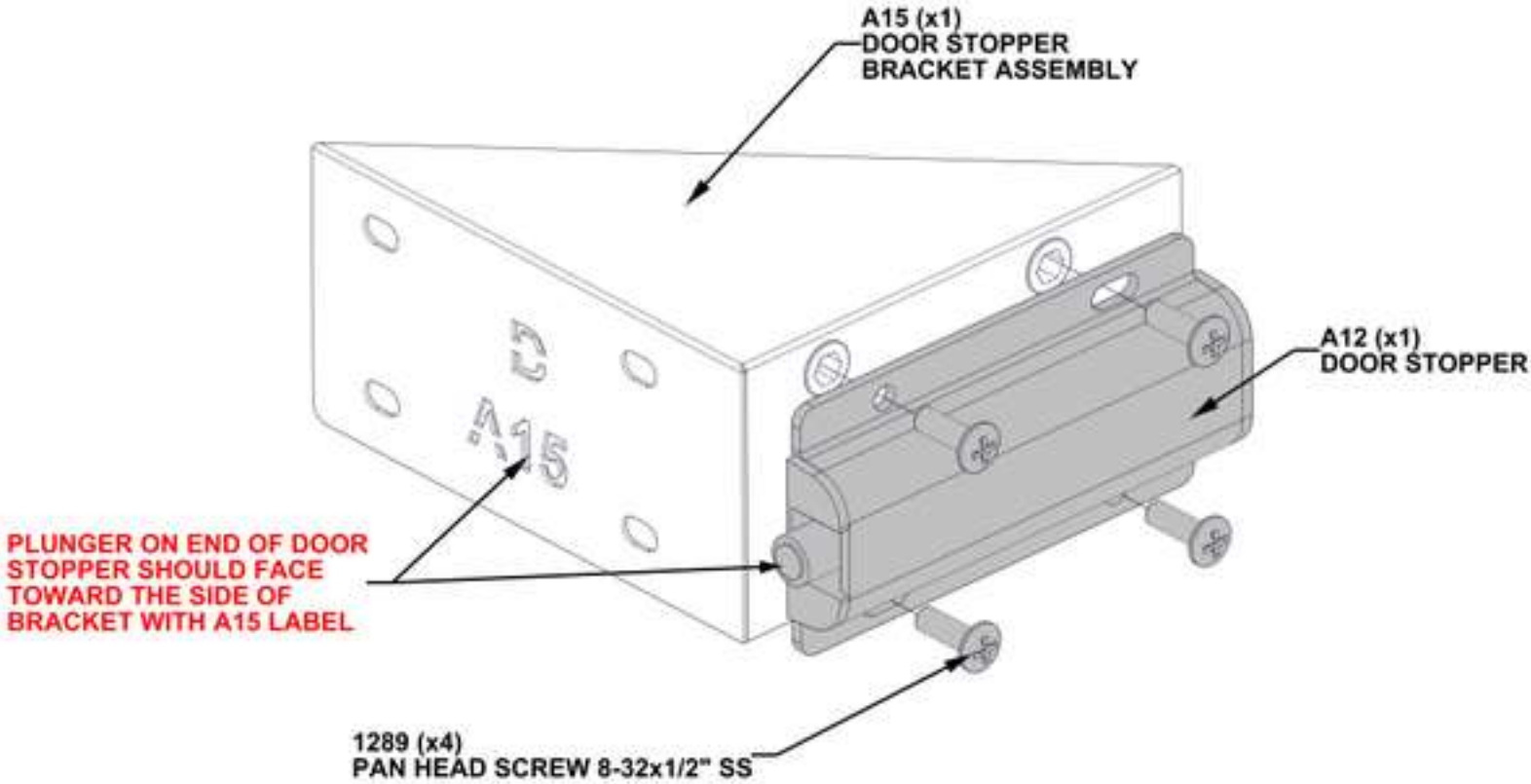

STEP 57 - SINK CABINET ASSEMBLY



DOOR STOPPER ASSEMBLY
FROM STEP 56

QTY	PART NUMBER	DESCRIPTION
4	H101289	PAN HEAD SCREW 8-32x1/2" SS

- ALIGN DOOR STOPPER ASSEMBLY WITH THREADED INSERTS IN G4 SINK CABINET BACK PANEL.

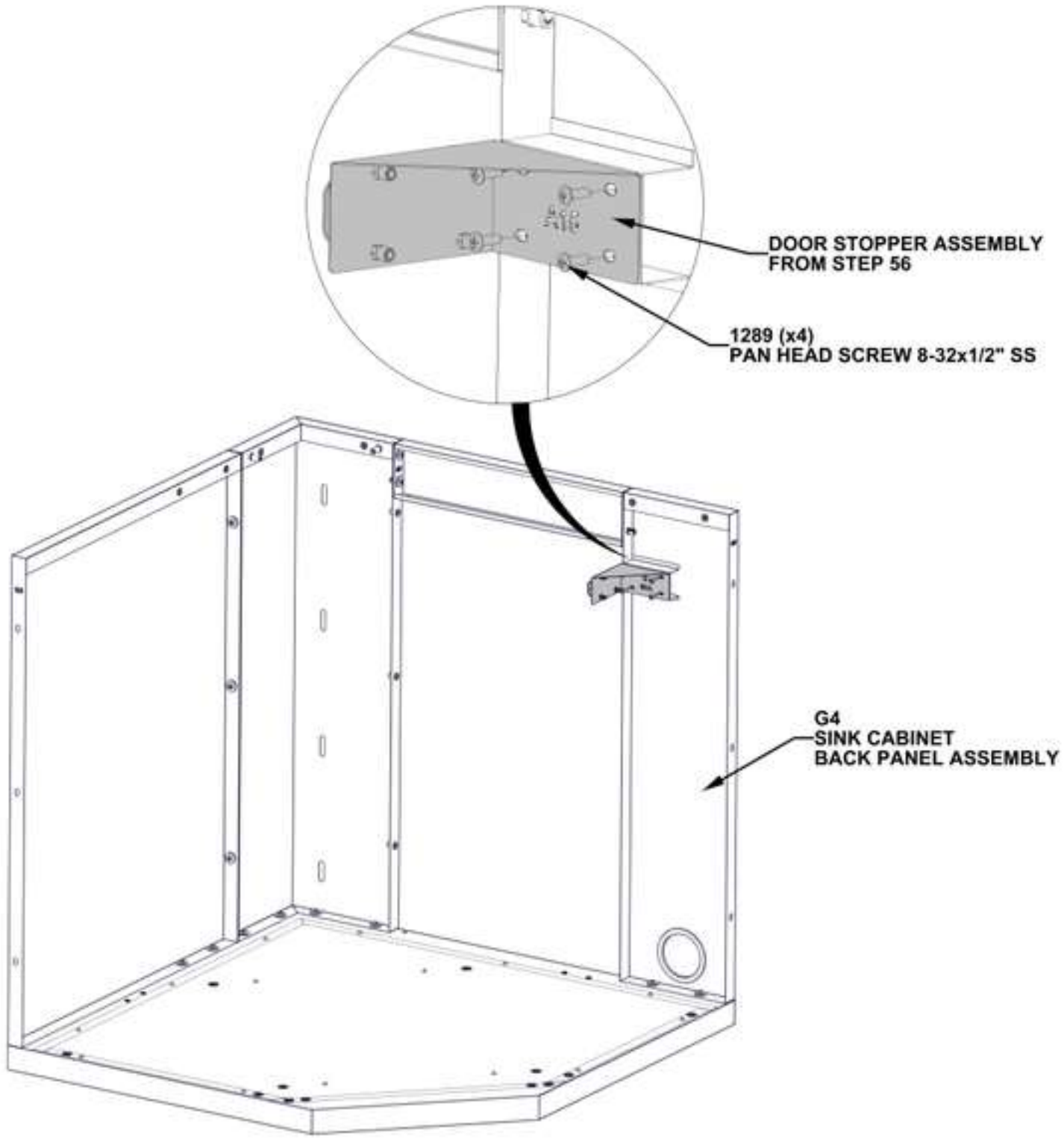

STEP 58A - SINK CABINET ASSEMBLY



QTY	PART NUMBER	DESCRIPTION
2	H101202	TORX PAN HEAD 1/4-20x3/4 ASSY

H5 SINK CABINET HINGE CHANNEL ASSEMBLY - A4M04461
(x1) 34 1/16"x3 5/8"x1 3/4" (45x92x865)

- HARDWARE ATTACHES ON INSIDE OF CABINET

1202 (x2)
TORX PAN HEAD 1/4-20x3/4 ASSY

HAND TIGHTEN ONLY

H5 LABEL INDICATES
TOP OF CHANNEL

H5 (x1)
SINK CABINET HINGE
CHANNEL ASSEMBLY

FLUSH SIDE OF
CHANNEL WITH
FLOOR PANEL

STEP 58B - SINK CABINET ASSEMBLY



H3 SINK CABINET CHANNEL ASSEMBLY - A4M04459
(x1) 34 1/16"x3 5/8"x1 3/4" (45x92x865)

QTY	PART NUMBER	DESCRIPTION
2	H101202	TORX PAN HEAD 1/4-20x3/4 ASSY

- HARDWARE ATTACHES ON INSIDE OF CABINET

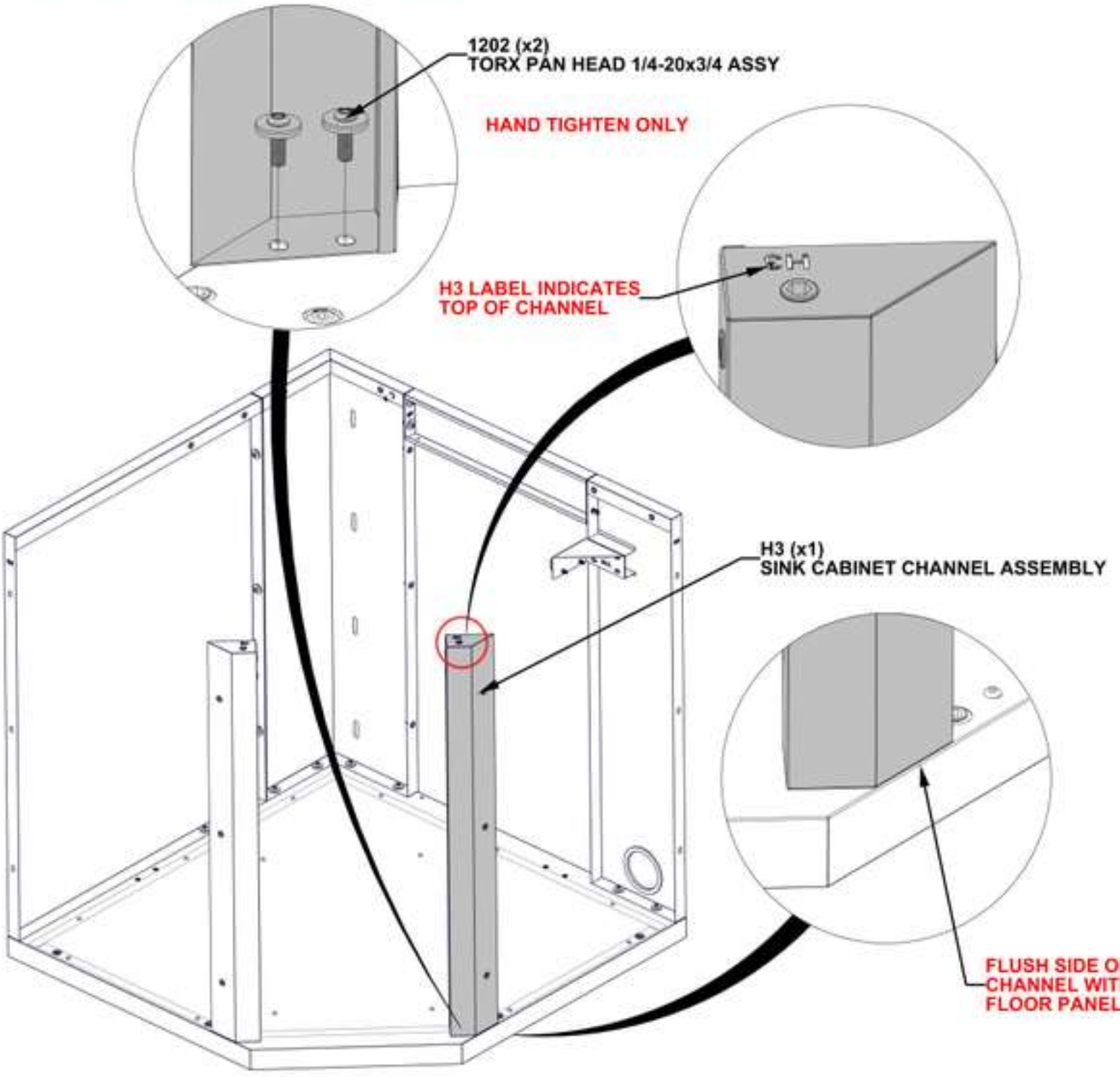

STEP 58C - SINK CABINET ASSEMBLY

CRITICAL:
- **MAKE SURE THE DISTANCE BETWEEN THE UPRIGHT CHANNELS IS THE CORRECT MEASUREMENT SHOWN BELOW.**
- **TIGHTEN ALL HARDWARE FROM PREVIOUS STEPS.**

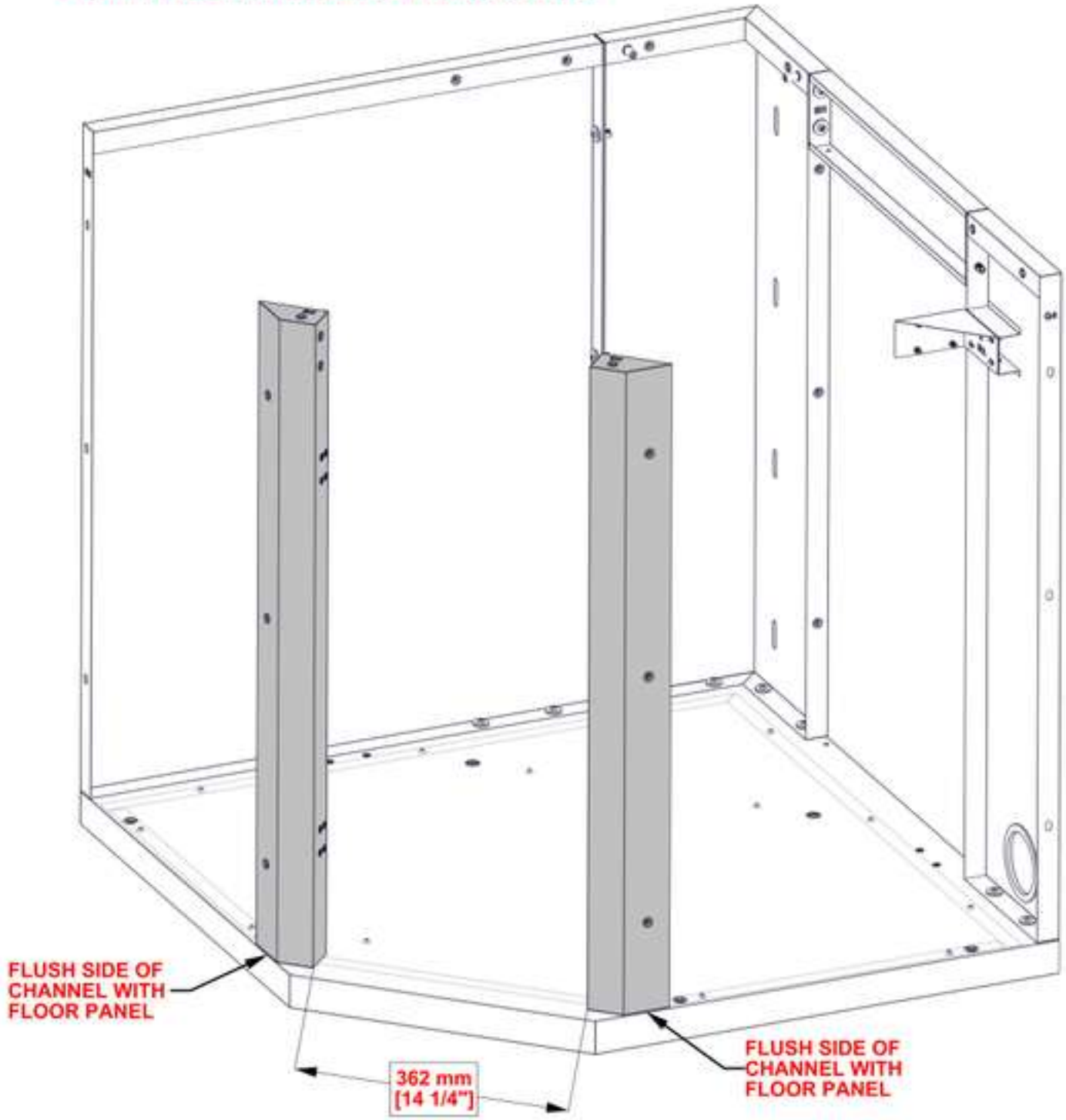

STEP 59 - SINK CABINET ASSEMBLY

QTY	PART NUMBER	DESCRIPTION
2	H101289	PAN HEAD SCREW 8-32x1/2" SS

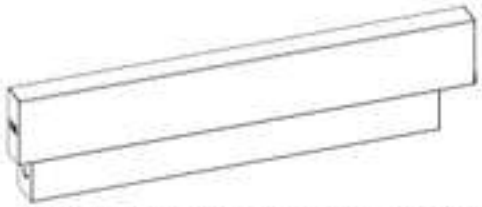

H4 SINK CABINET TRIM PANEL ASSEMBLY - A4M04460
(x1) 15 3/4"x4 3/8"x2 3/16" (56x80x400)



A2 MAGNET BRACKET - A4M03026
(x1) 1"x1 1/4"x3 1/8" (25x31x80)

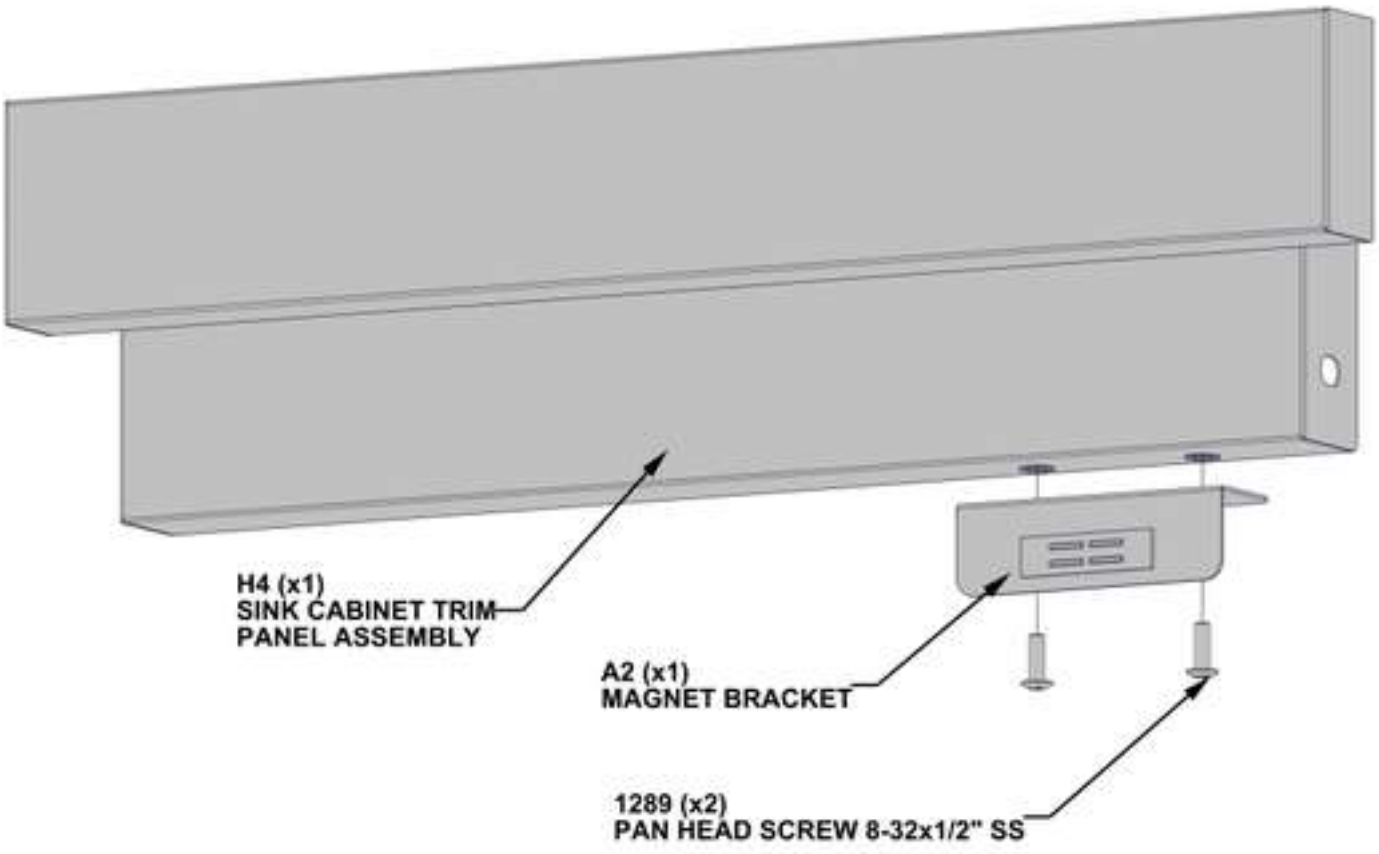

STEP 60 - SINK CABINET ASSEMBLY

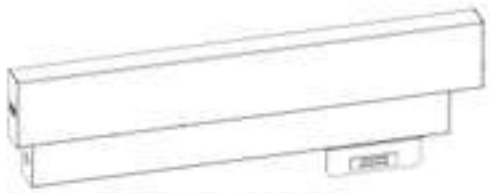

TRIM PANEL ASSEMBLY
FROM STEP 59

QTY	PART NUMBER	DESCRIPTION
4	H101202	TORX PAN HEAD 1/4-20x3/4 ASSY

- HARDWARE ATTACHES ON INSIDE OF CABINET

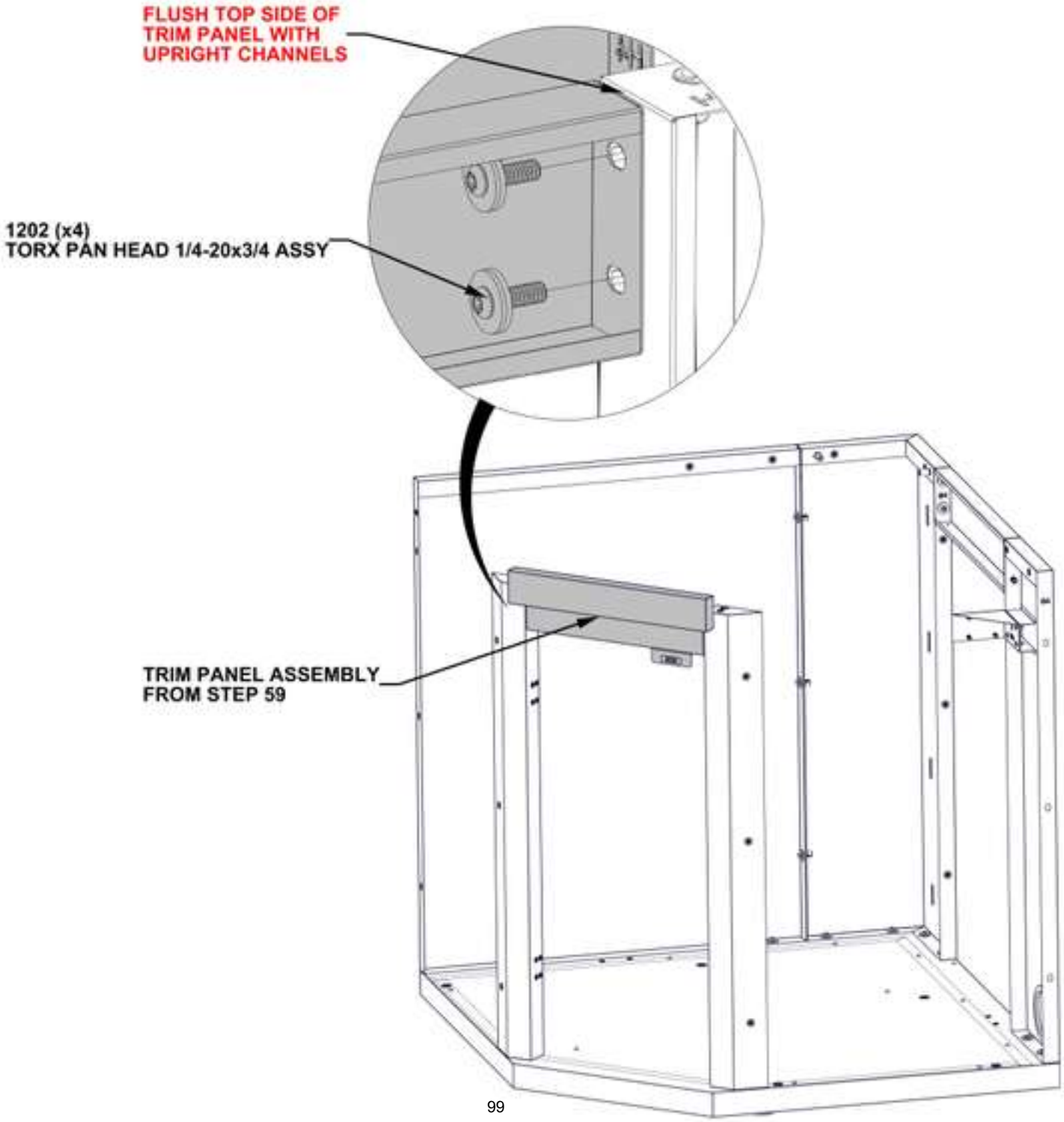

STEP 61A - SINK CABINET ASSEMBLY



T3 SINK CABINET TABLETOP ASSEMBLY - A4M04458
(x1) 34 3/4"x34 3/4"x1 3/16" (30x882x882)

- POSITION SINK TABLETOP ON CABINET.
- TOP SIDE OF TABLETOP WILL SIT FLUSH WITH BACK PANELS.
- FRONT SIDES OF TABLETOP WILL BE FLUSH WITH FRONT UPRIGHT CHANNELS.

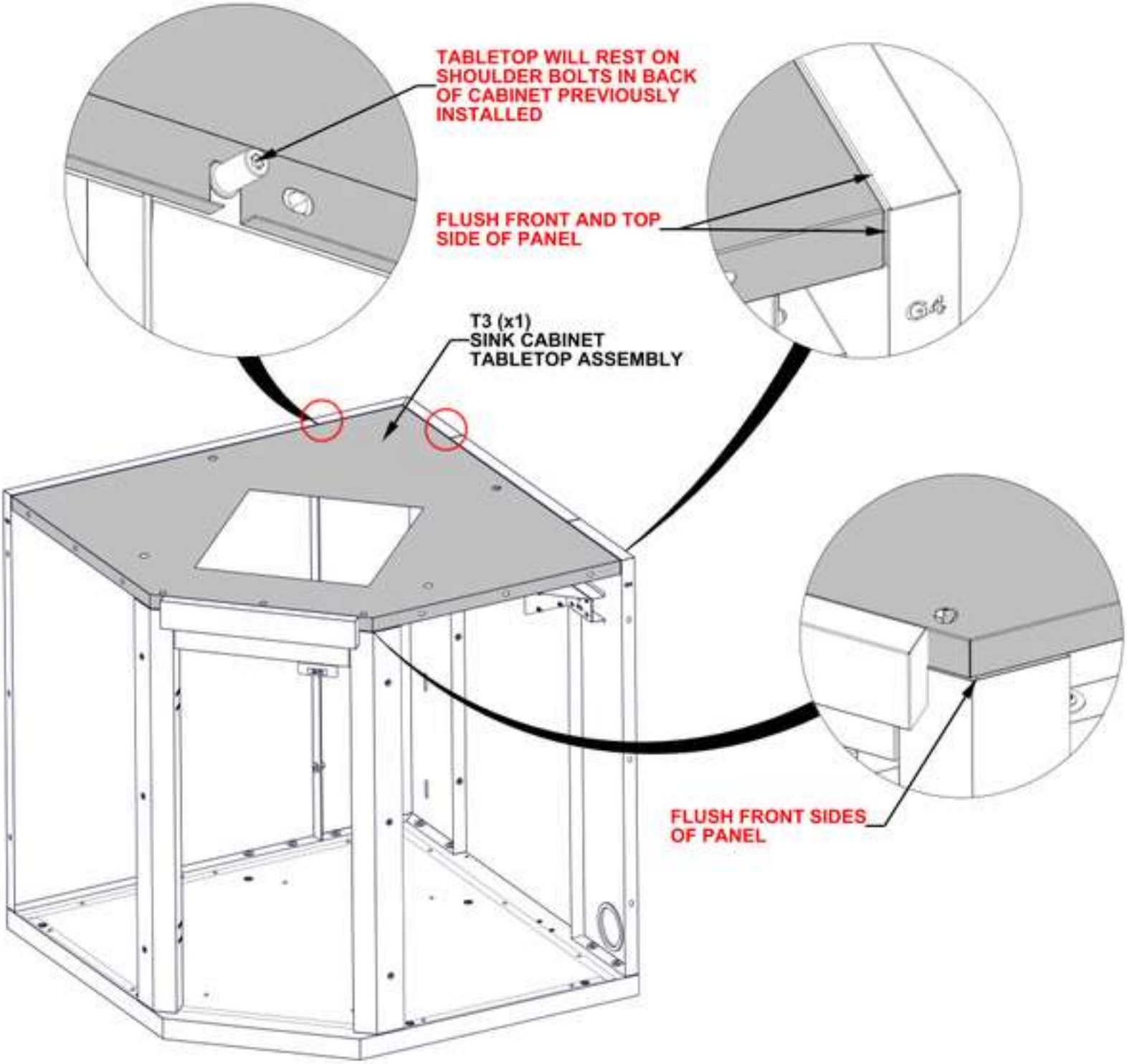

STEP 61B - SINK CABINET ASSEMBLY

QTY	PART NUMBER	DESCRIPTION
6	H101202	TORX PAN HEAD 1/4-20x3/4 ASSY

- IT IS RECOMMENDED TO USE PROVIDED ANGLE DRIVER TO INSTALL HARDWARE IN THIS STEP.
- HARDWARE ATTACHES ON INSIDE OF CABINET

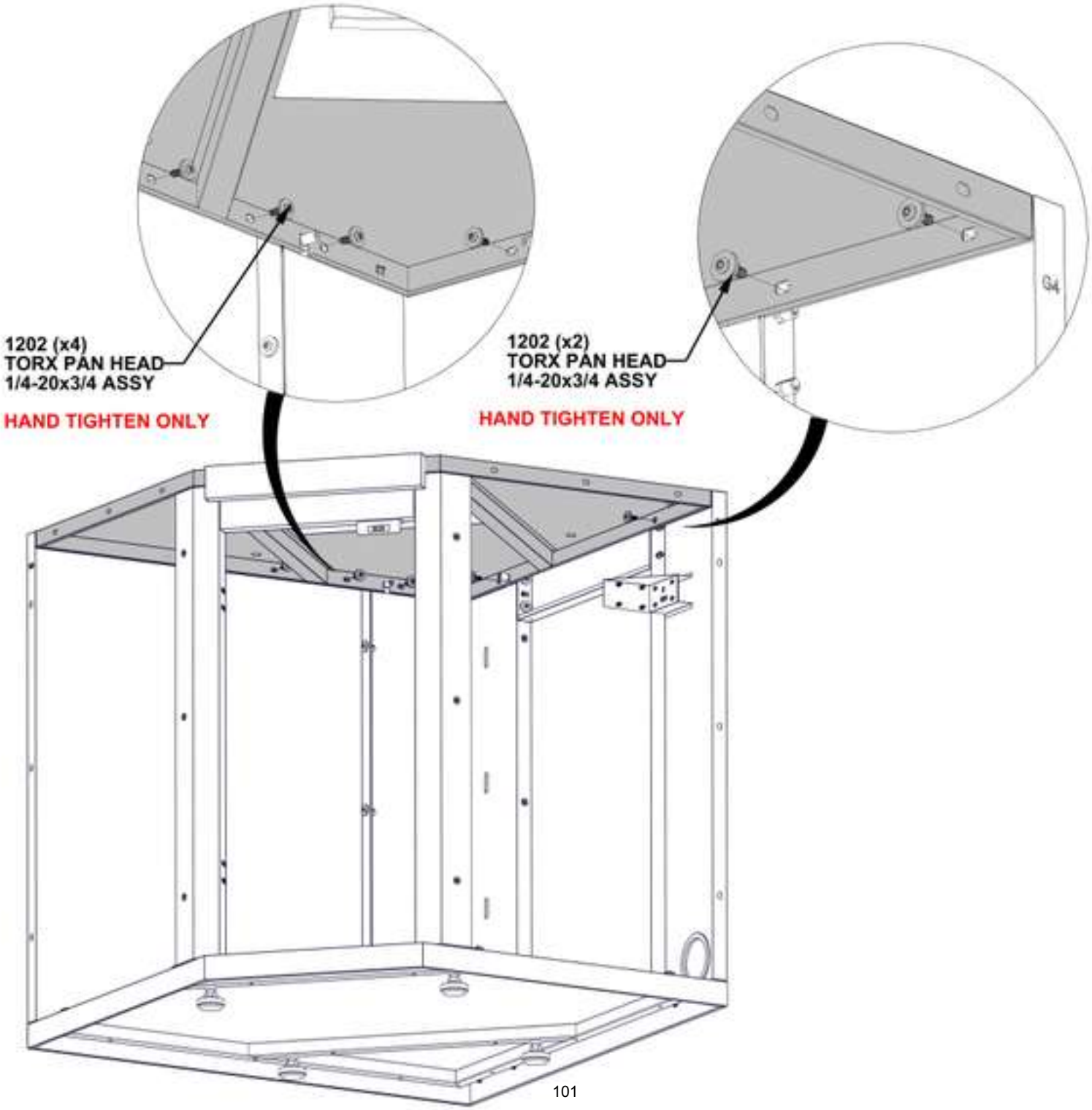

STEP 61C - SINK CABINET ASSEMBLY

QTY	PART NUMBER	DESCRIPTION
3	H101132	TORX SOCKET SCREW SHORT 1/4-20

- FLUSH CABINET TABLETOP WITH BACK PANELS AND FRONT CHANNELS.
- SQUARE ALL SIDES OF CABINET BEFORE TIGHTENING HARDWARE.

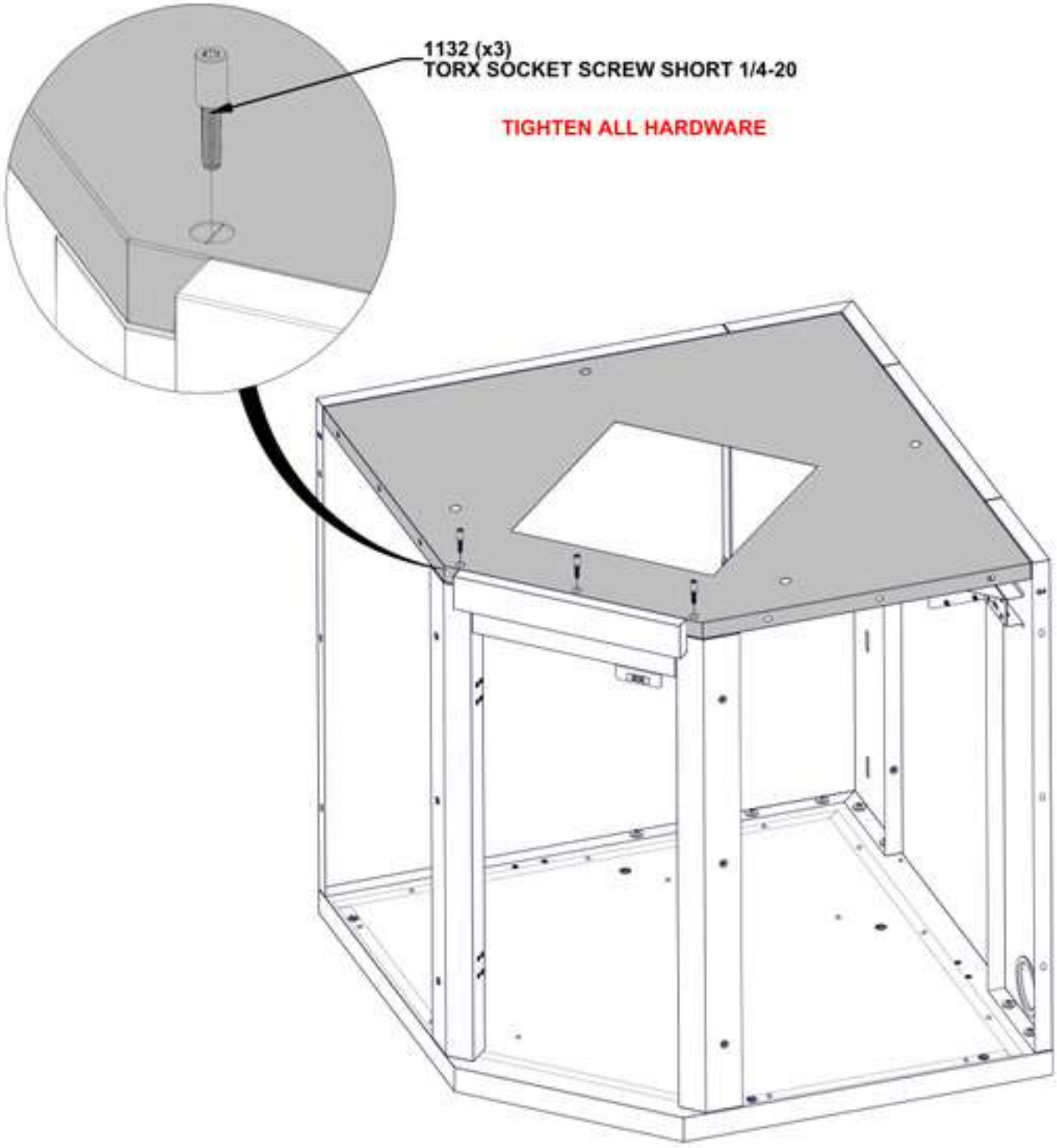

STEP 62 - SINK CABINET INSTALLATION



SINK CABINET FROM
STEPS 52 - 61

QTY	PART NUMBER	DESCRIPTION
4	H101202	TORX PAN HEAD 1/4-20x3/4 ASSY

- POSITION SINK CABINET ASSEMBLY UNDERNEATH STEEL KITCHEN STRUCTURE.
- SIDE OF SINK CABINET WILL SIT AGAINST THE INSIDE OF THE BACK RIGHT POST.
- BACKSIDE OF SINK CABINET WILL SIT FLUSH WITH BACKSIDE OF POST.
- BEFORE TIGHTENING HARDWARE, ADJUST CABINET FEET AS NEEDED UNTIL SINK CABINET IS LEVEL.

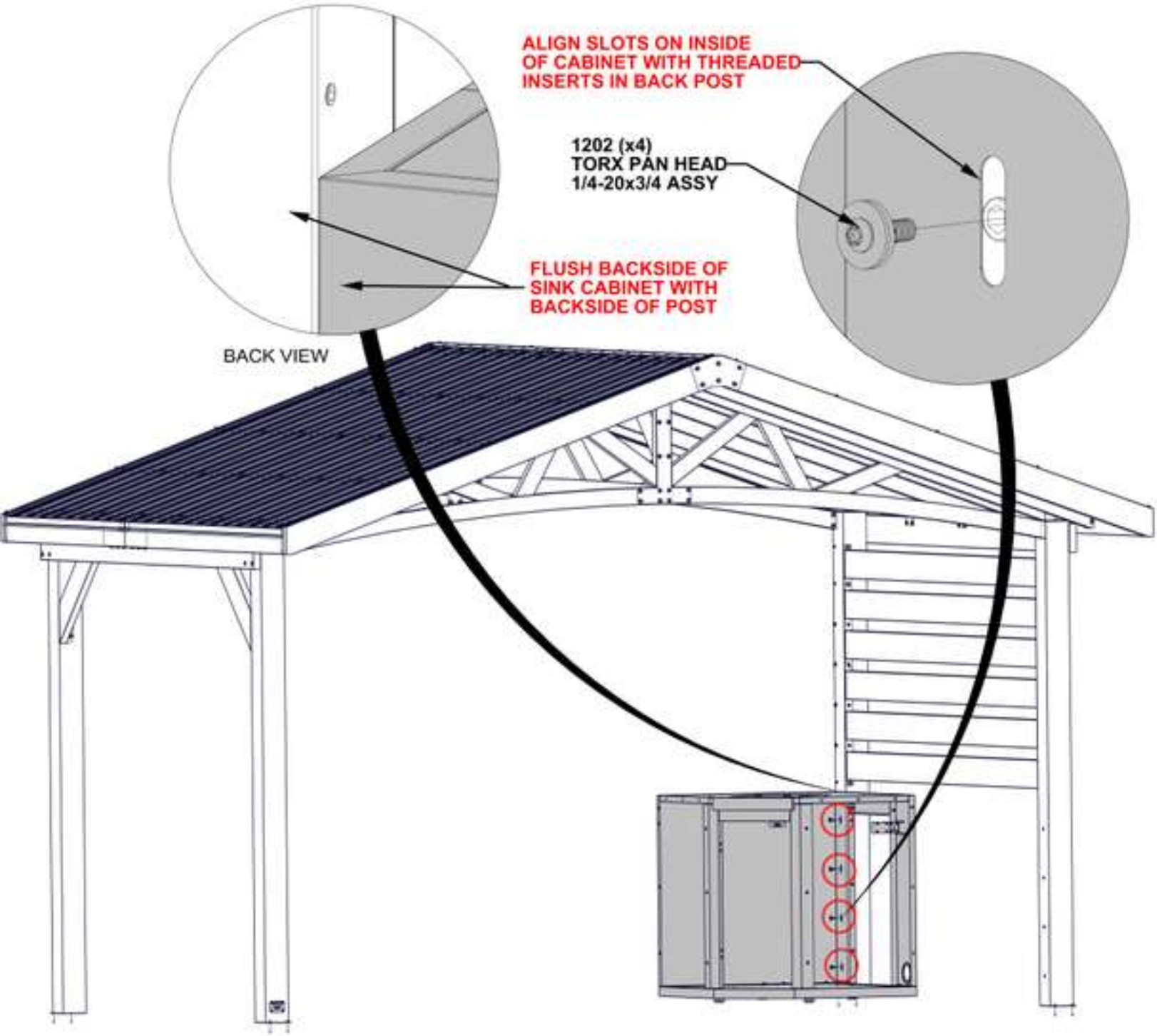

STEP 63 - SHELF CABINET ASSEMBLY

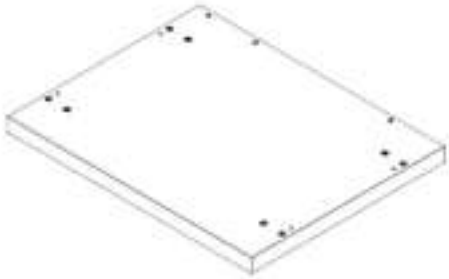

F2 RIGHT CABINET FLOOR PANEL ASSEMBLY - A4M04493
(x1) 31 3/8"x24 3/4"x1 3/4" (45x628.5x797)

- LOOKING AT THE FRONT SIDE OF THE CABINETS, POSITION FLOOR PANEL AS SHOWN BELOW.
- EACH FLOOR PANEL HAS FACTORY INSTALLED ADJUSTABLE FEET. USE PROVIDED HEX DRIVER TO ADJUST EACH FOOT UNTIL PANEL IS LEVEL.

F2 (x1)
RIGHT CABINET
FLOOR PANEL ASSEMBLY

F2 LABEL INDICATES
BACK OF FLOOR PANEL

ADJUSTABLE FOOT

STEP 64A - SHELF CABINET ASSEMBLY



S3 RIGHT CABINET SIDE PANEL ASSEMBLY L - A4M04450
(x1) 35 1/4"x23 11/16"x1 3/8" (35x601.5x896)

QTY	PART NUMBER	DESCRIPTION
5	H101202	TORX PAN HEAD 1/4-20x3/4 ASSY

- ONLY KITCHEN CABINETS ARE SHOWN FOR DETAIL.

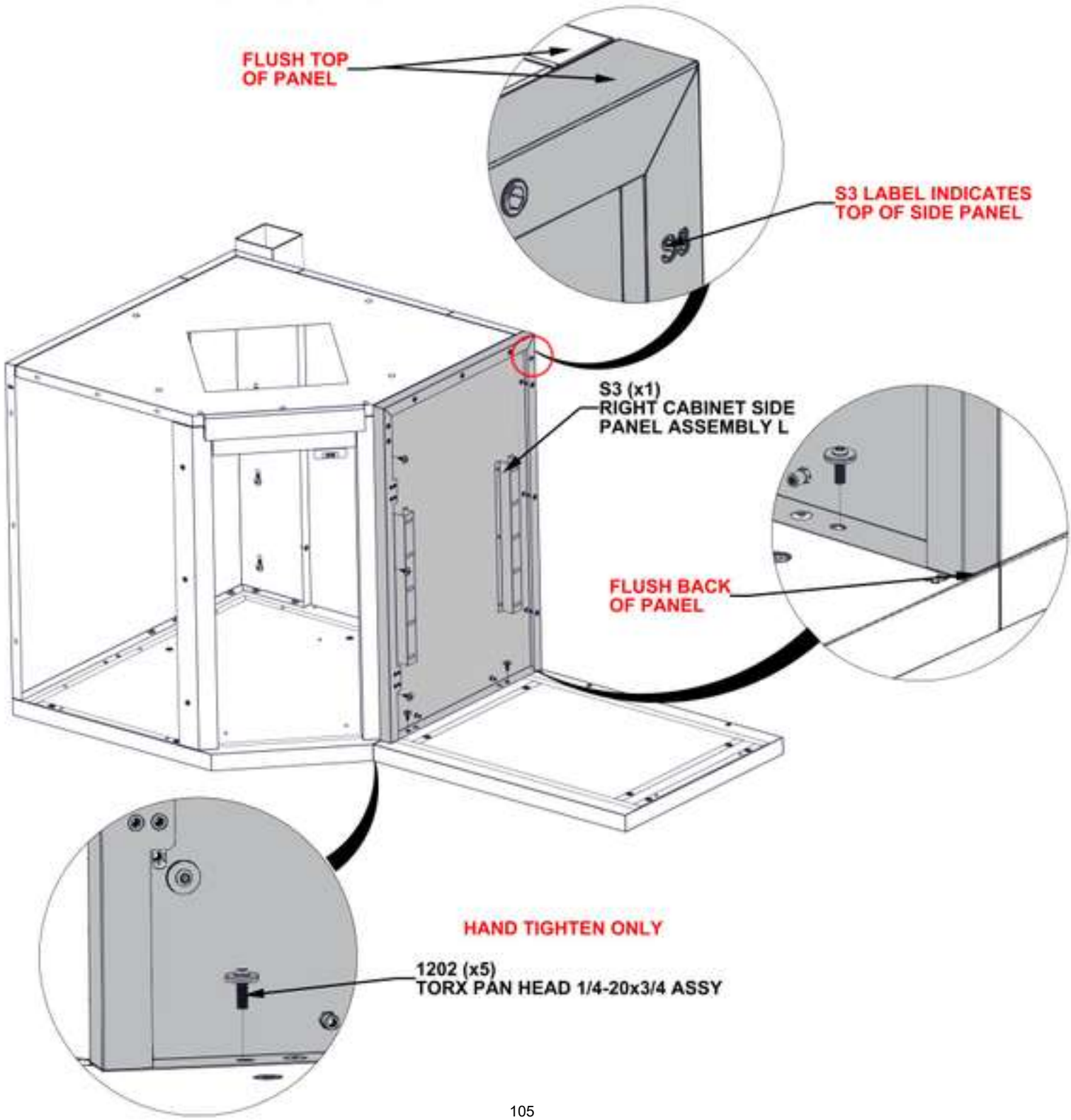

STEP 64B - SHELF CABINET ASSEMBLY

QTY	PART NUMBER	DESCRIPTION
6	H101202	TORX PAN HEAD 1/4-20x3/4 ASSY

- ONLY KITCHEN CABINETS ARE SHOWN FOR DETAIL.
- IT IS RECOMMENDED TO USE PROVIDED ANGLE DRIVER TO INSTALL HARDWARE IN THIS STEP.
- HARDWARE ATTACHES ON INSIDE OF CABINET

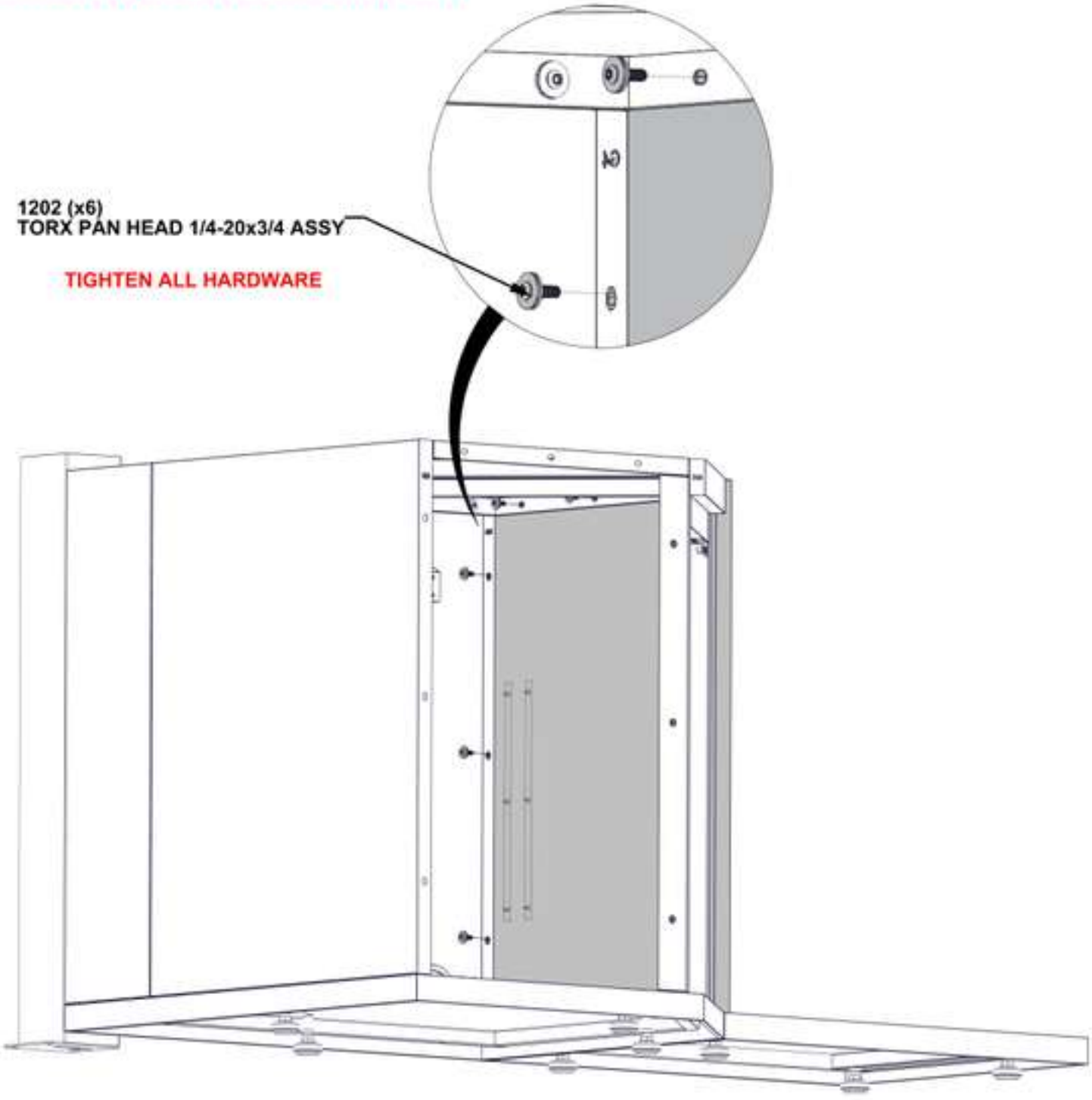

STEP 64C - SHELF CABINET ASSEMBLY



A6 ANGLED BRACKET - A4M03053
(x1) 1 3/8"x1 15/16"x17 1/8" (35x50x435)

QTY	PART NUMBER	DESCRIPTION
4	H101202	TORX PAN HEAD 1/4-20x3/4 ASSY

- ONLY KITCHEN CABINETS ARE SHOWN FOR DETAIL.
- HARDWARE ATTACHES ON INSIDE OF CABINET

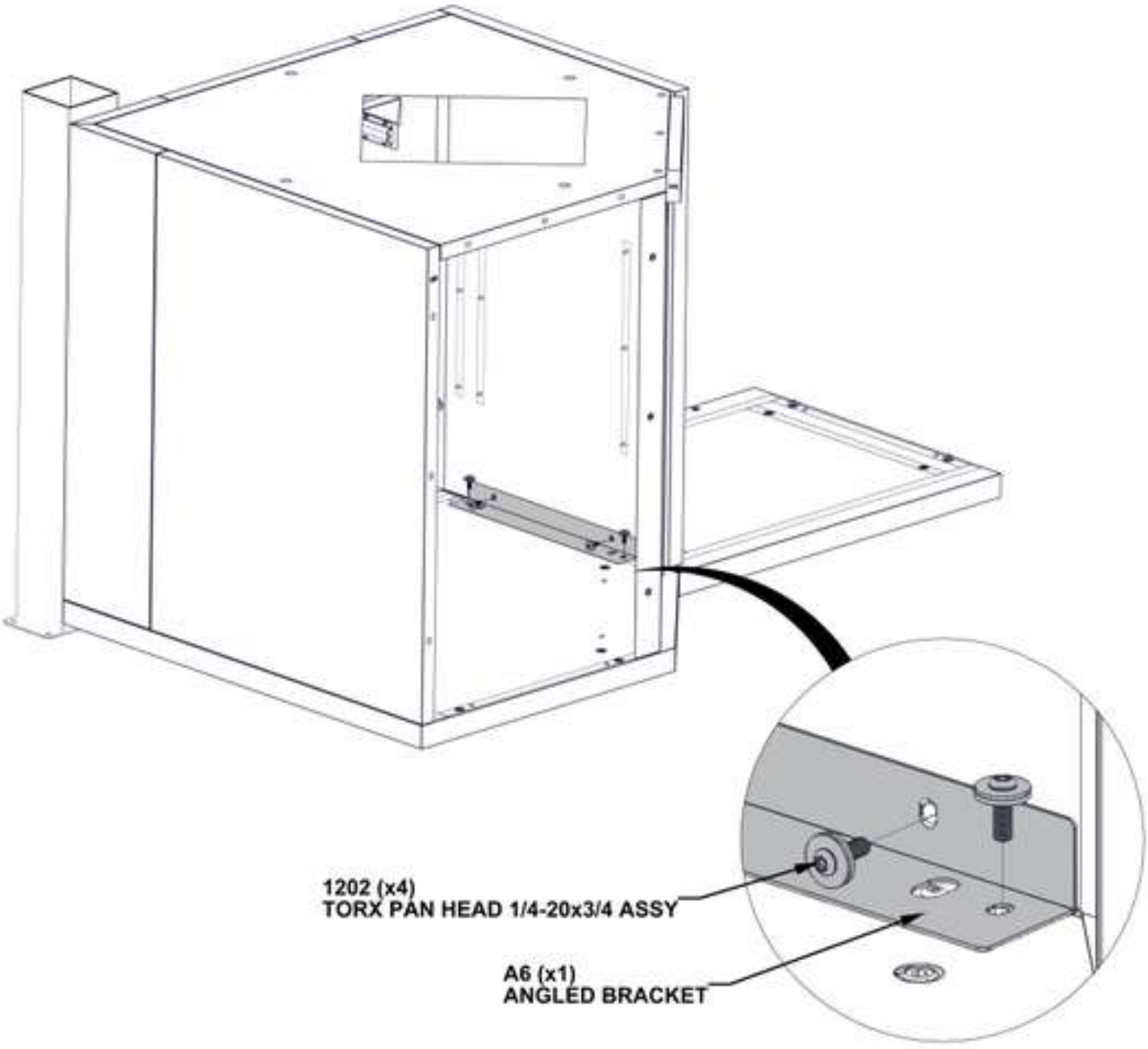

STEP 65 - FRIDGE CABINET ASSEMBLY

QTY	PART NUMBER	DESCRIPTION
2	H101202	TORX PAN HEAD 1/4-20x3/4 ASSY



F1 FRIDGE CABINET FLOOR ASSEMBLY - A4M04443
(x1) 28 5/8"x24 3/4"x1 3/4" (45x628.50x727)



S2 FRIDGE CABINET SIDE PANEL ASSEMBLY R - A4M04446
(x1) 35 1/4"x23 11/16"x1 9/16" (40x601.5x896)

- POSITION FLOOR PANEL IN THE PROXIMITY OF WHERE YOUR KITCHEN WILL BE.
- EACH FLOOR PANEL HAS FACTORY INSTALLED ADJUSTABLE FEET. USE PROVIDED HEX DRIVER TO ADJUST EACH FOOT UNTIL PANEL IS LEVEL.

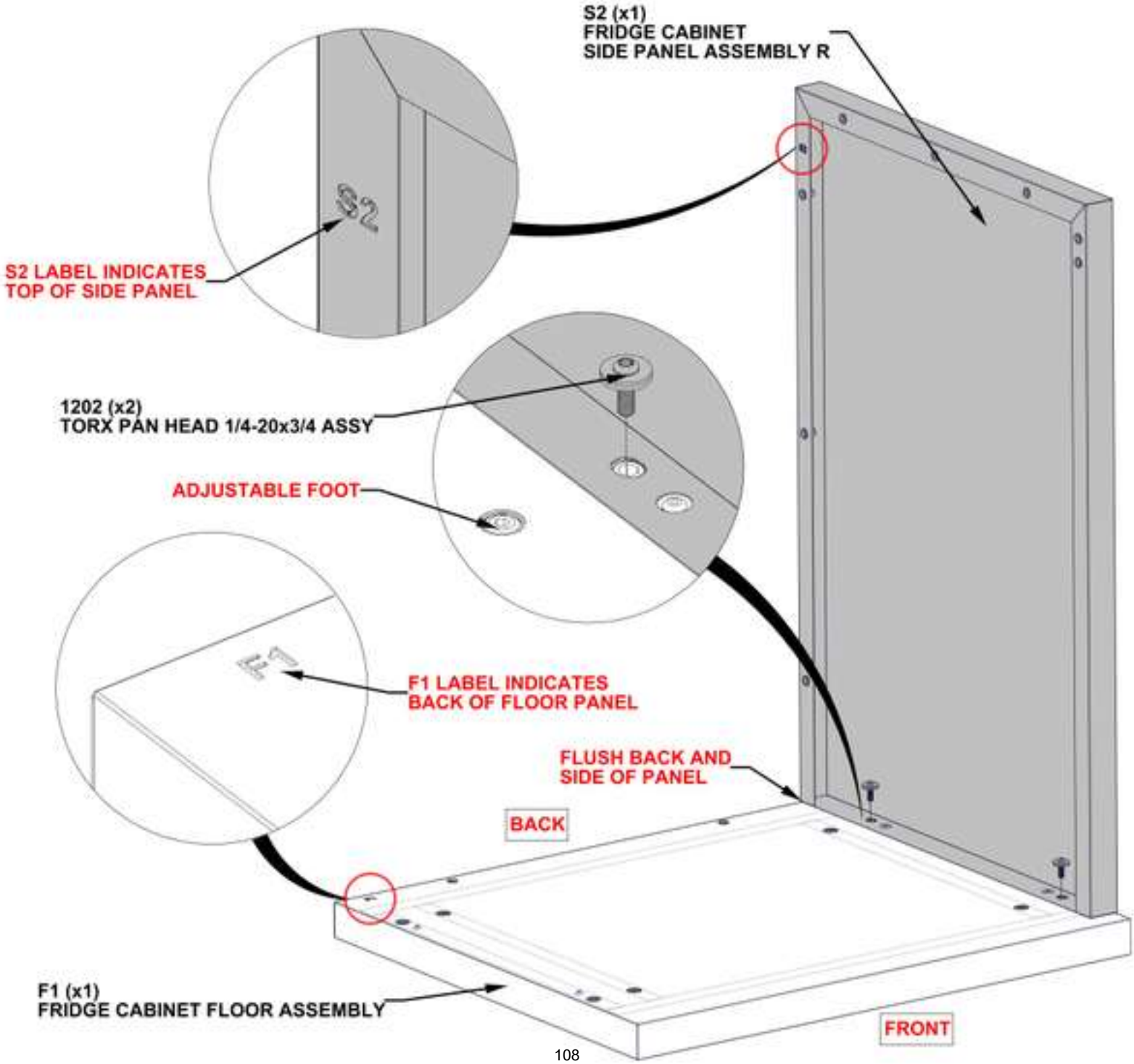

STEP 66 - FRIDGE CABINET ASSEMBLY

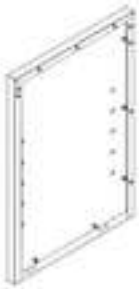

S1 FRIDGE CABINET SIDE PANEL ASSEMBLY L - A4M04445
(x1) 35 1/4"x23 11/16"x1 9/16" (40x601.5x896)

QTY	PART NUMBER	DESCRIPTION
2	H101202	TORX PAN HEAD 1/4-20x3/4 ASSY

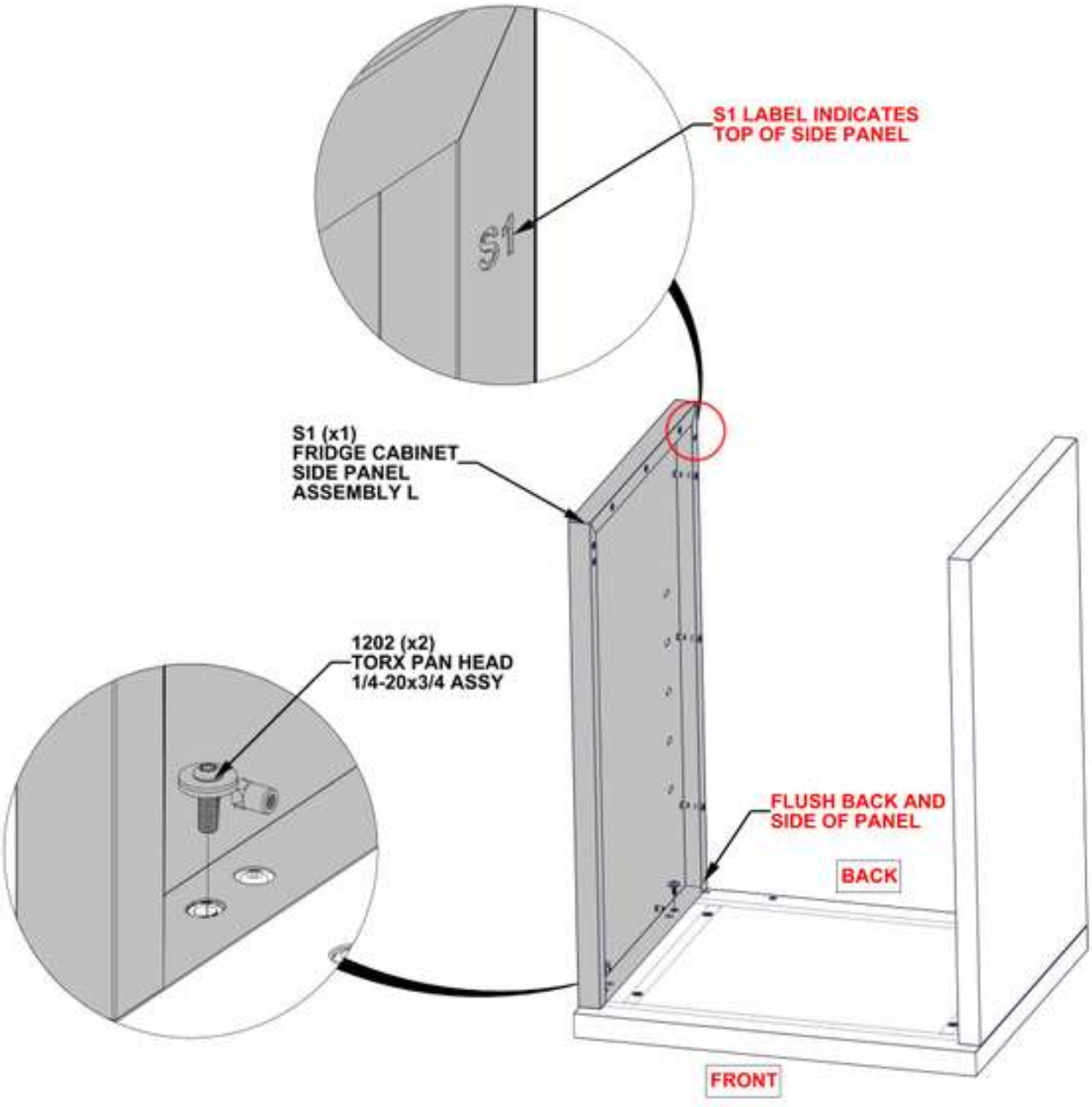

STEP 67A - FRIDGE CABINET ASSEMBLY



QTY	PART NUMBER	DESCRIPTION
8	H101202	TORX PAN HEAD 1/4-20x3/4 ASSY

G1 FRIDGE CABINET BACK PANEL ASSEMBLY - A4M04447
(x1) 35 1/4"x25 3/8"x1 3/16" (30x644x896)

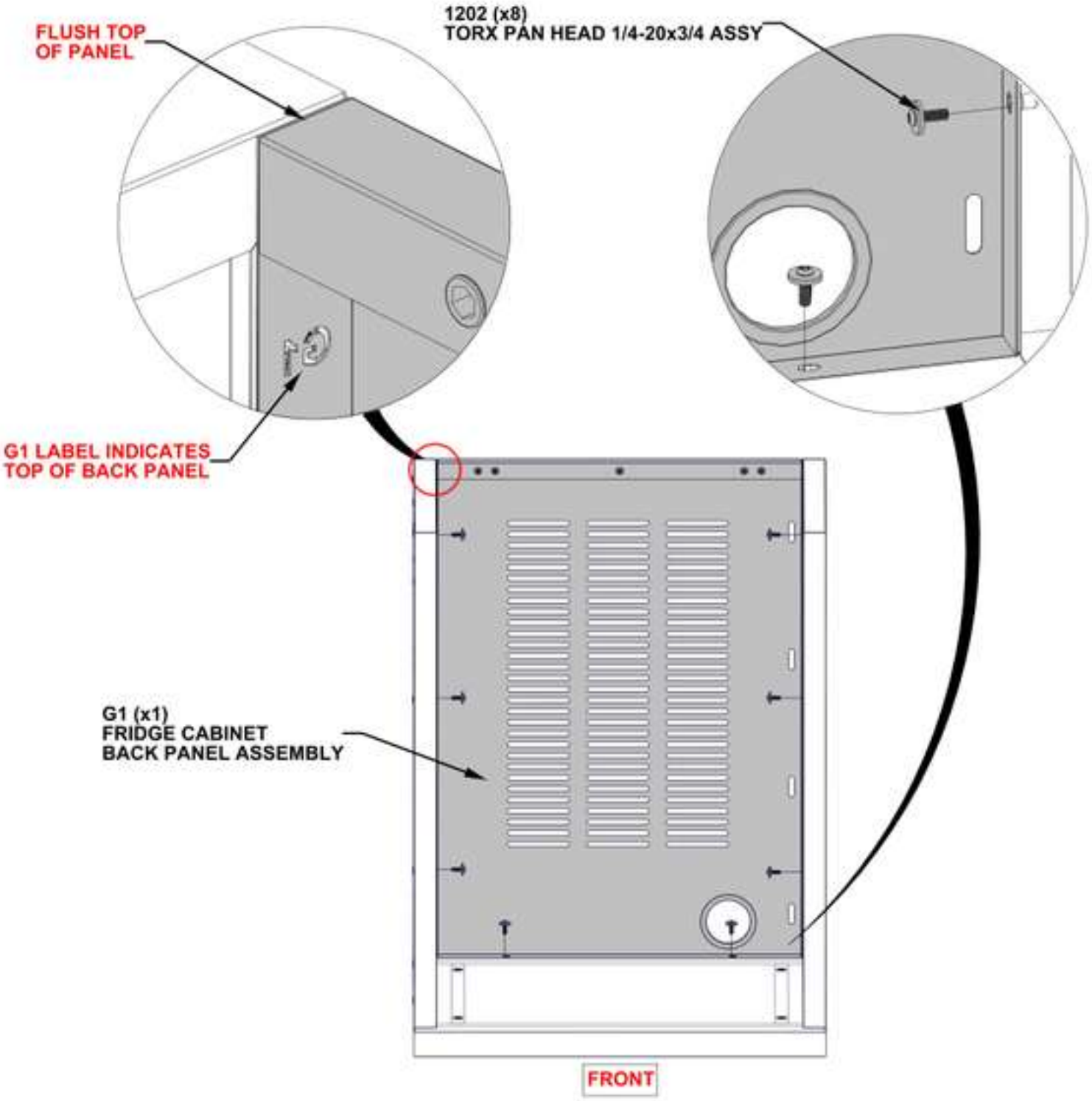

STEP 67B - FRIDGE CABINET ASSEMBLY

QTY	PART NUMBER	DESCRIPTION
2	H101132	TORX SOCKET SCREW SHORT 1/4-20

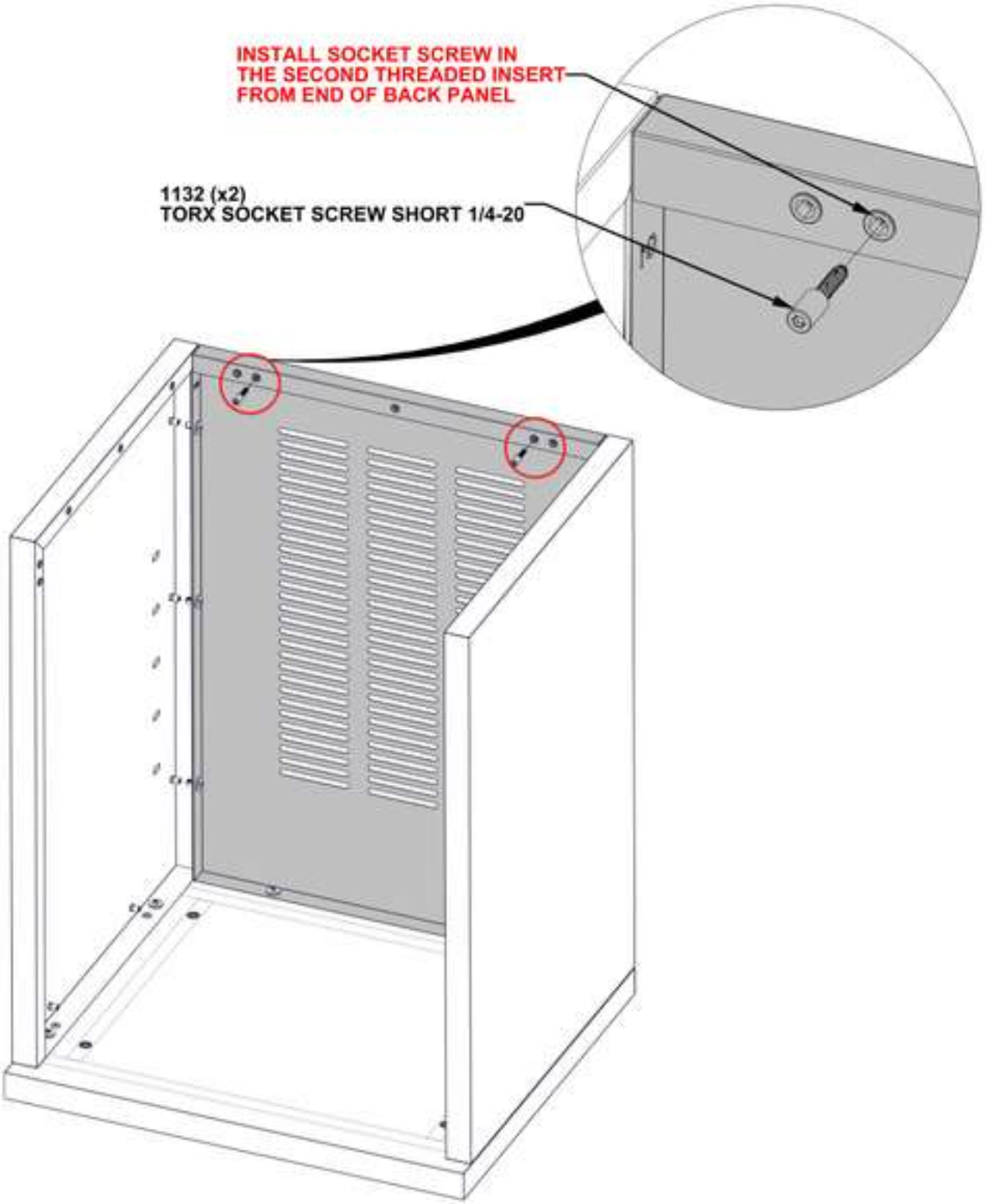

STEP 68 - FRIDGE CABINET ASSEMBLY



QTY	PART NUMBER	DESCRIPTION
4	H101202	TORX PAN HEAD 1/4-20x3/4 ASSY

H1 FRIDGE CABINET TRIM PANEL ASSEMBLY - A4M04449
(x1) 60"x3 3/8"x2 3/16" (56x86.5x1524.5)

- HARDWARE ATTACHES ON INSIDE OF CABINET

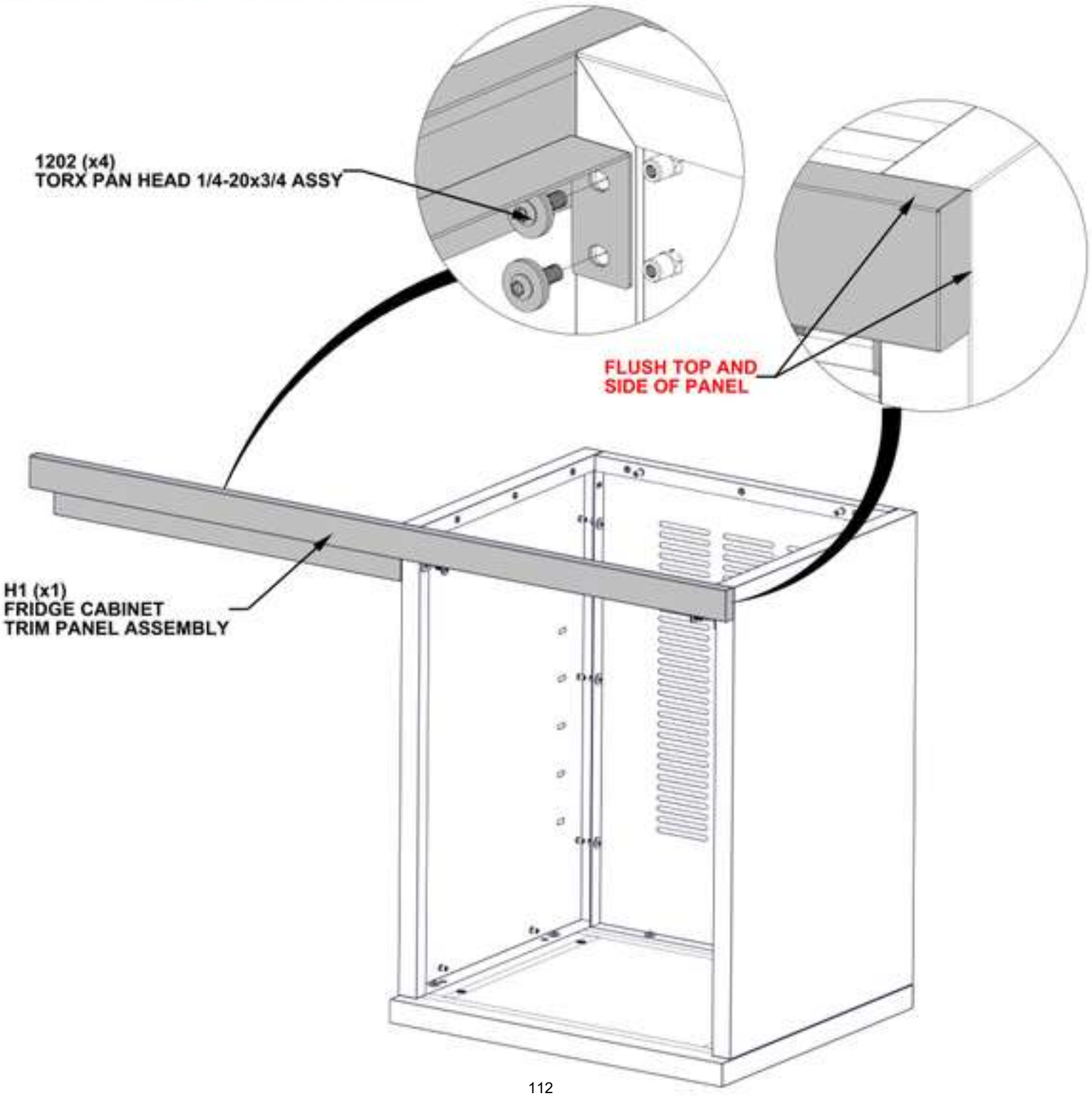

STEP 69A - FRIDGE CABINET ASSEMBLY



T1 FRIDGE CABINET TABLETOP ASSEMBLY - A4M04448
(x1) 25 3/8"x22 7/16"x1 3/16" (30x569.5x644)

- POSITION FRIDGE TABLETOP ON CABINET.
- TOP SIDE OF TABLETOP WILL SIT FLUSH WITH BACK AND SIDE PANELS.

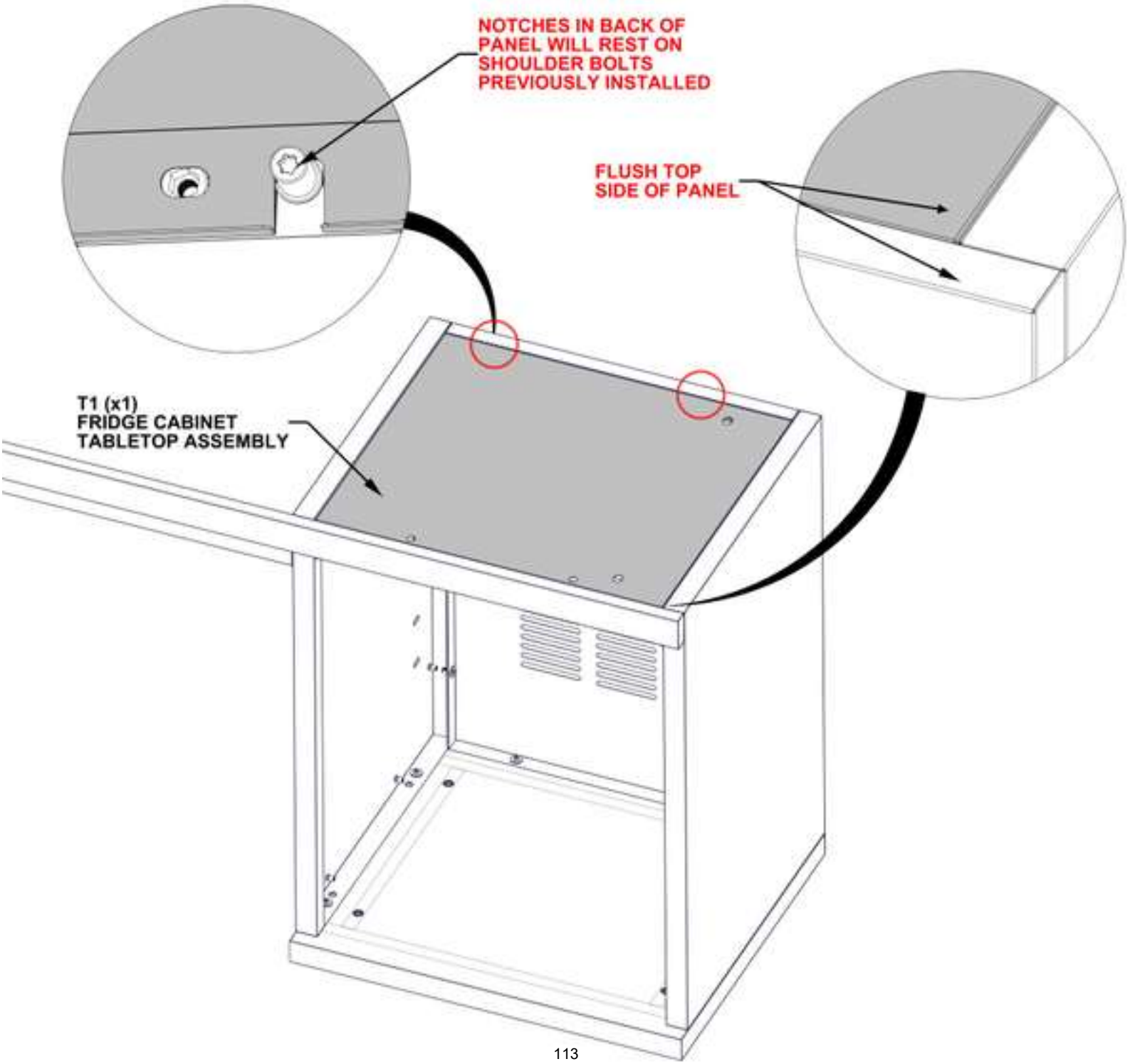

STEP 69B - FRIDGE CABINET ASSEMBLY

QTY	PART NUMBER	DESCRIPTION
9	H101202	TORX PAN HEAD 1/4-20x3/4 ASSY

- HARDWARE ATTACHES ON INSIDE OF CABINET

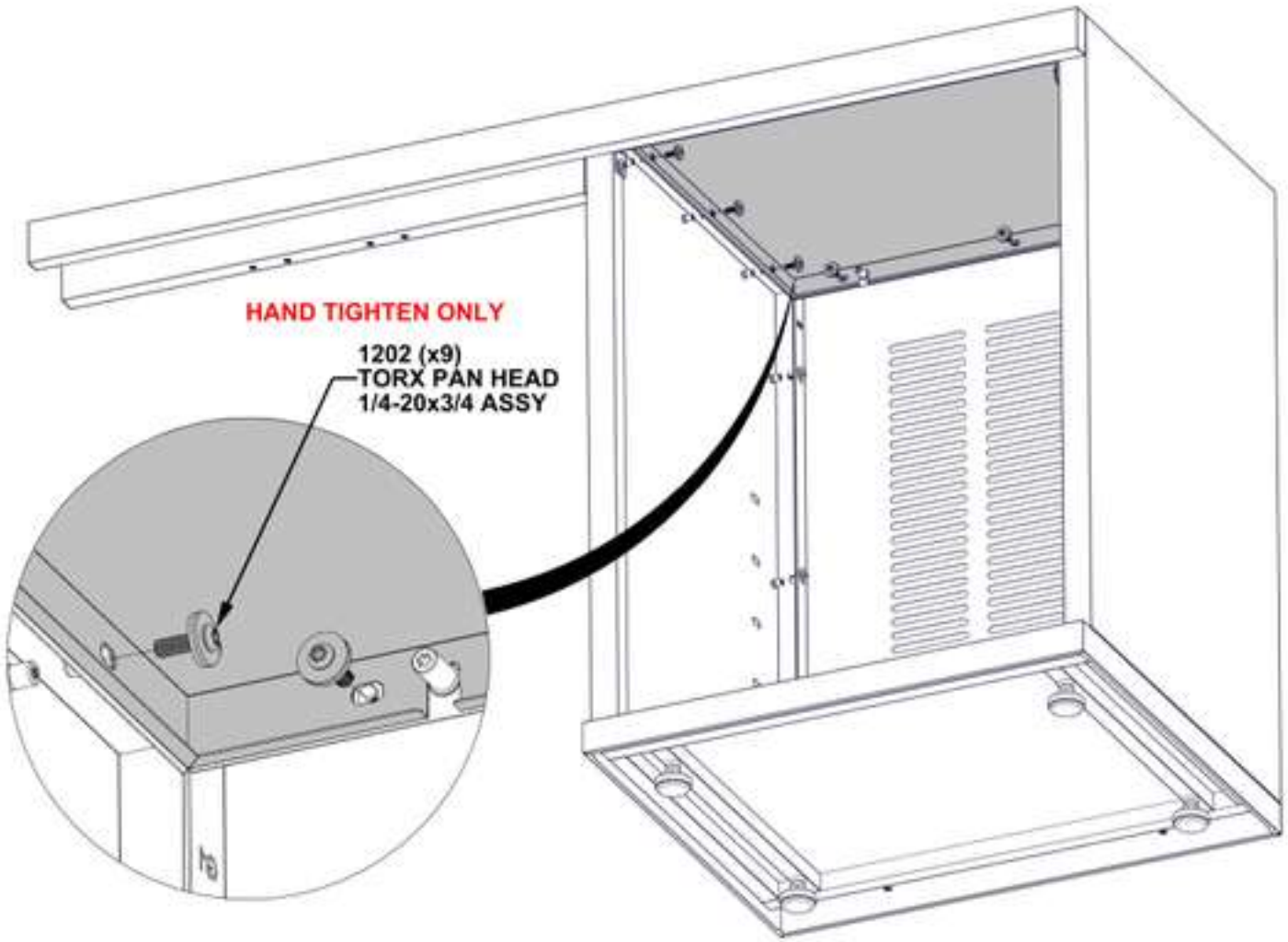

STEP 69C - FRIDGE CABINET ASSEMBLY

QTY	PART NUMBER	DESCRIPTION
2	H101132	TORX SOCKET SCREW SHORT 1/4-20

- FLUSH TOP SURFACE OF CABINET TABLETOP WITH BACK AND SIDE PANELS.
- SQUARE ALL SIDES OF CABINET BEFORE TIGHTENING HARDWARE.

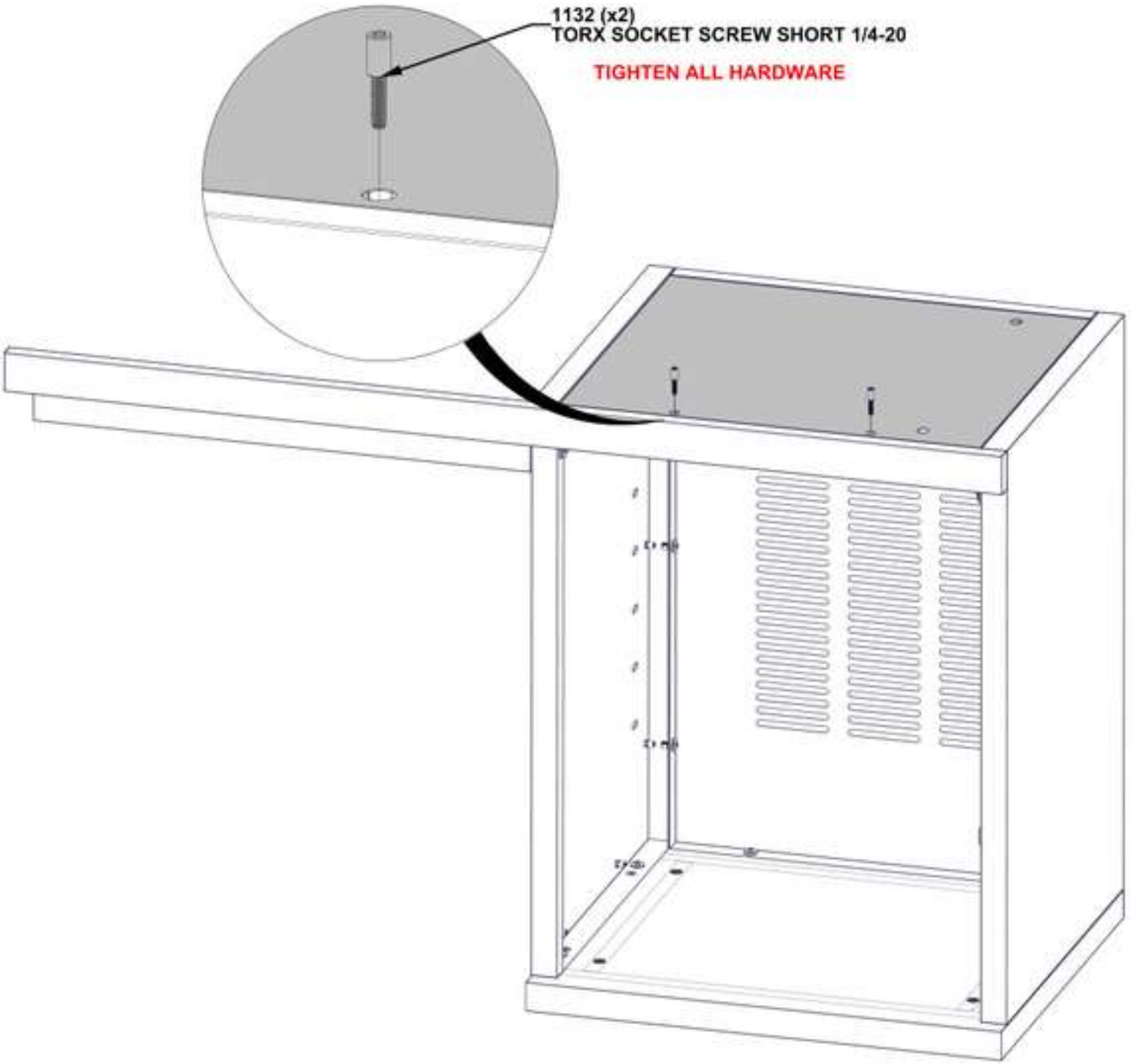

STEP 70 - FRIDGE CABINET INSTALLATION

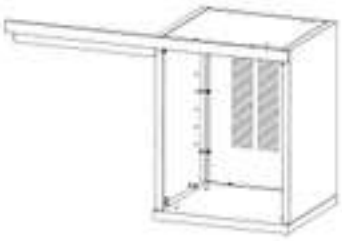

FRIDGE CABINET FROM
STEPS 65 - 69

QTY	PART NUMBER	DESCRIPTION
4	H101202	TORX PAN HEAD 1/4-20x3/4 ASSY

- POSITION FRIDGE CABINET ASSEMBLY UNDERNEATH STEEL KITCHEN STRUCTURE.
- SIDE OF FRIDGE CABINET WILL SIT FLUSH WITH FRONTSIDE OF POST.
- BEFORE TIGHTENING HARDWARE, ADJUST CABINET FEET AS NEEDED UNTIL FRIDGE CABINET IS LEVEL.

ALIGN SLOTS ON INSIDE
OF CABINET WITH THREADED
INSERTS IN FRONT POST

1202 (x4)
TORX PAN HEAD 1/4-20x3/4 ASSY

FLUSH SIDE OF
FRIDGE CABINET WITH
FRONT SIDE OF POST

STEP 71 - SHELF CABINET ASSEMBLY



A6 ANGLED BRACKET - A4M03053
(x1) 1 3/8"x1 15/16"x17 1/8" (35x50x435)

QTY	PART NUMBER	DESCRIPTION
4	H101202	TORX PAN HEAD 1/4-20x3/4 ASSY

- ONLY KITCHEN CABINETS ARE SHOWN FOR DETAIL.

1202 (x4)
TORX PAN HEAD 1/4-20x3/4 ASSY

A6 (x1)
ANGLED BRACKET

MAKE SURE FRONT FACE OF FLOOR PANELS ARE FLUSH

STEP 72 - SHELF CABINET ASSEMBLY

QTY	PART NUMBER	DESCRIPTION
4	H101202	TORX PAN HEAD 1/4-20x3/4 ASSY

- ONLY KITCHEN CABINETS ARE SHOWN FOR DETAIL.
- HARDWARE ATTACHES ON INSIDE OF CABINET

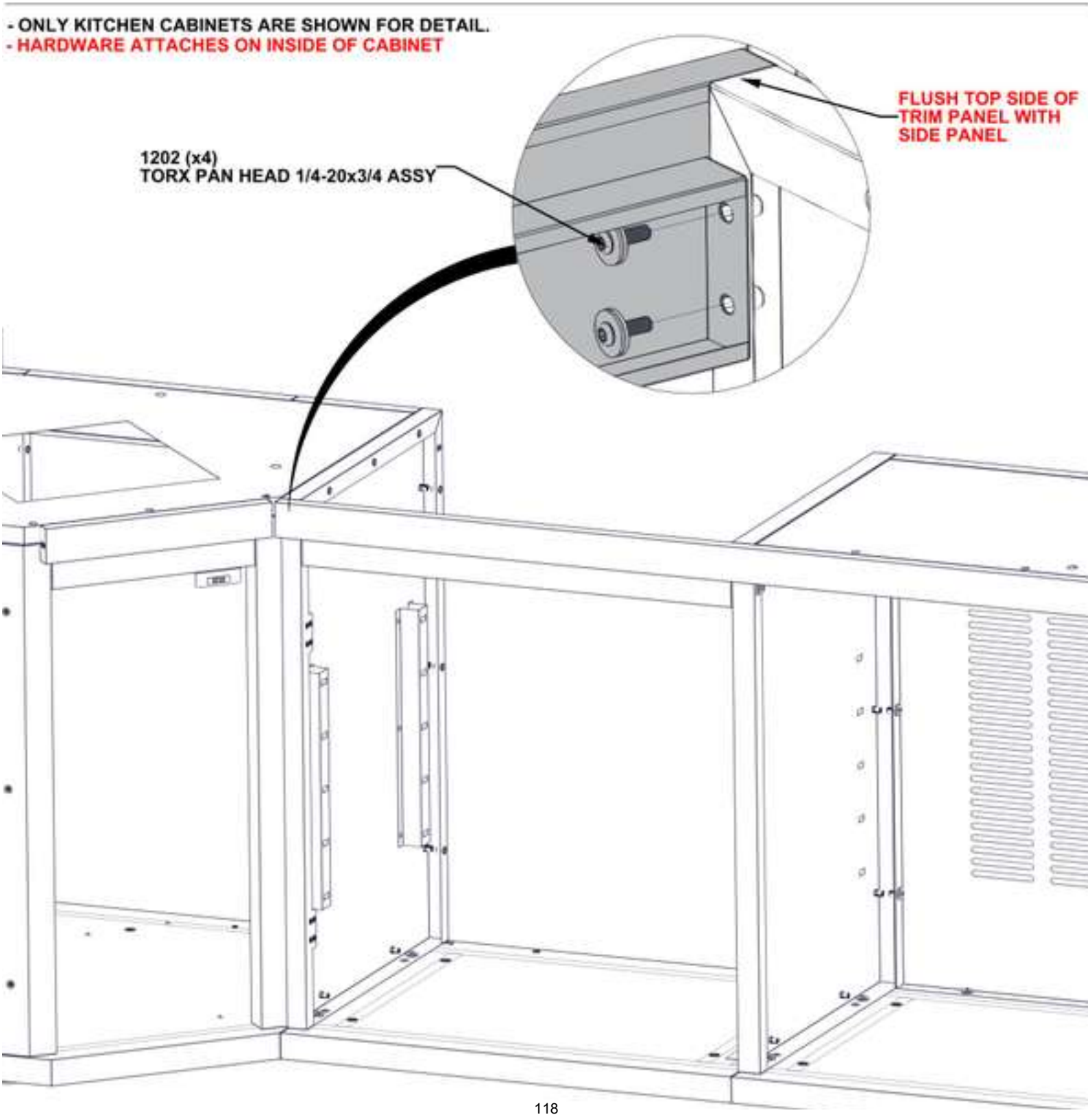

STEP 73 - SHELF CABINET ASSEMBLY



A2 MAGNET BRACKET - A4M03026
(x2) 1"x1 1/4"x3 1/8" (25x31x80)

QTY	PART NUMBER	DESCRIPTION
4	H101289	PAN HEAD SCREW 8-32x1/2" SS

- ONLY KITCHEN CABINETS ARE SHOWN FOR DETAIL.

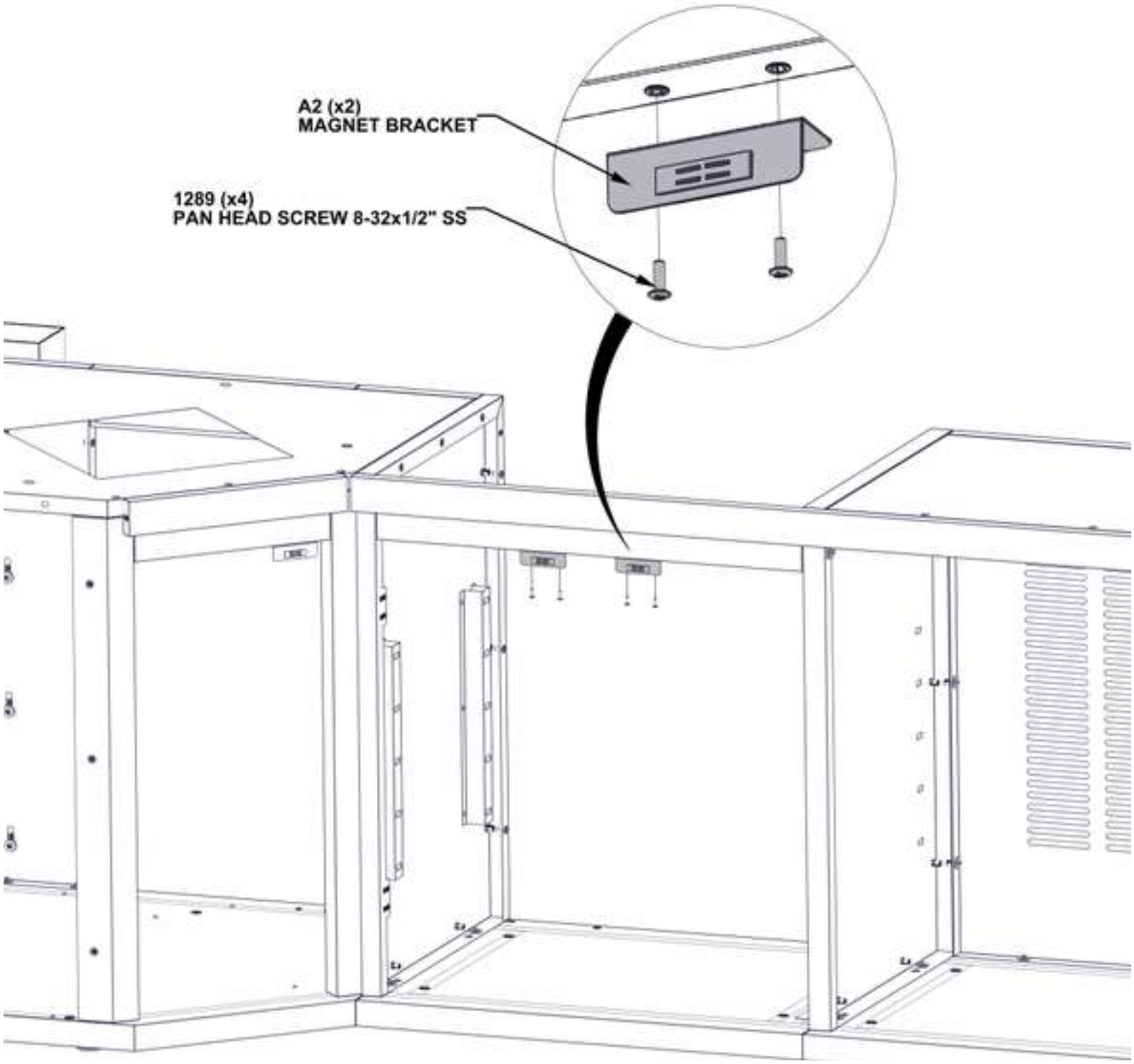

STEP 74A - SHELF CABINET ASSEMBLY



QTY	PART NUMBER	DESCRIPTION
8	H101202	TORX PAN HEAD 1/4-20x3/4 ASSY

G2 RIGHT CABINET BACK PANEL ASSEMBLY - A4M04451
(x1) 35 1/4"x29 15/16"z1 3/16" (30x760x896)

- ONLY KITCHEN CABINETS ARE SHOWN FOR DETAIL.

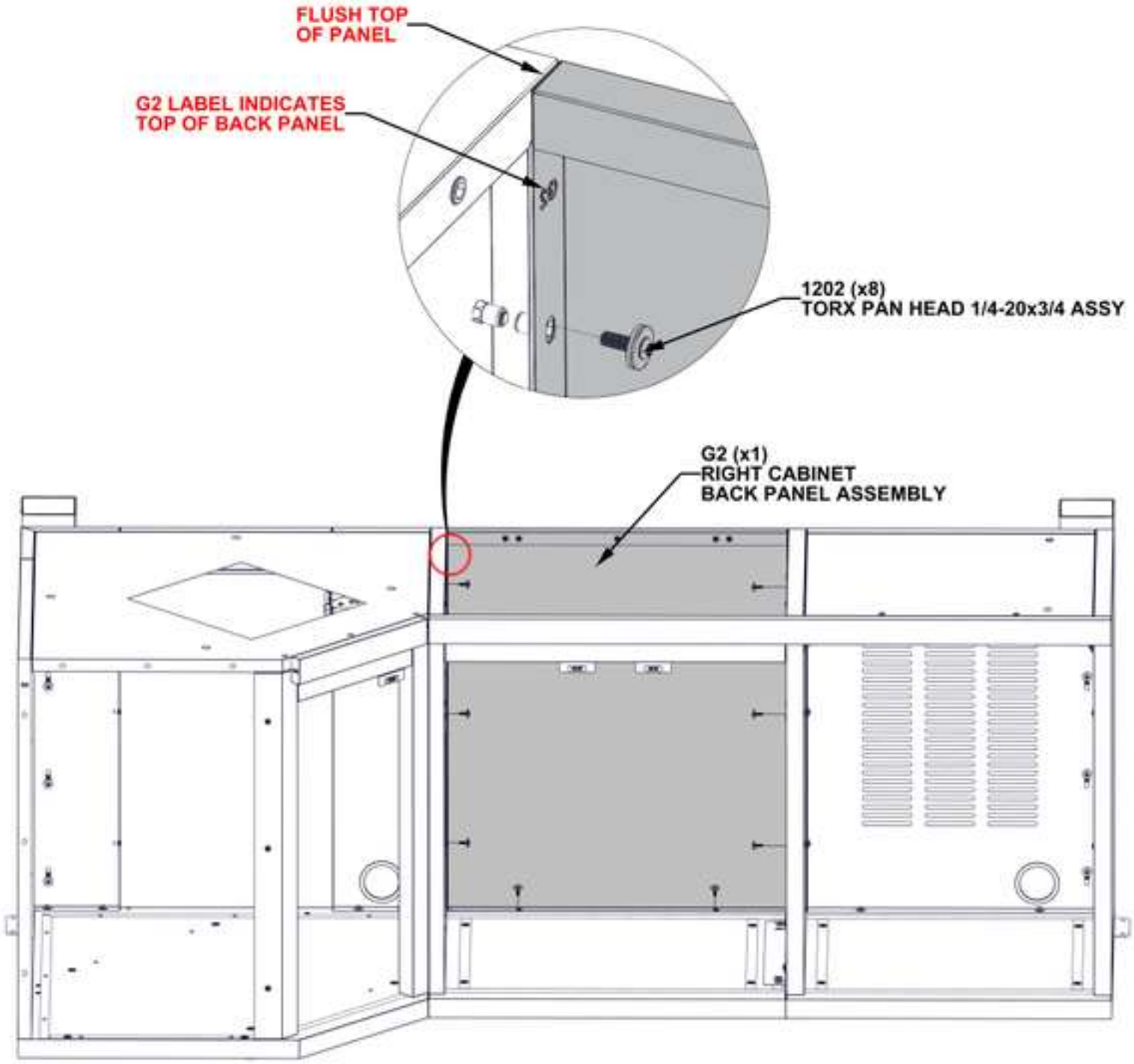

STEP 74B - SHELF CABINET ASSEMBLY

QTY	PART NUMBER	DESCRIPTION
2	H101132	TORX SOCKET SCREW SHORT 1/4-20

- ONLY KITCHEN CABINETS ARE SHOWN FOR DETAIL.

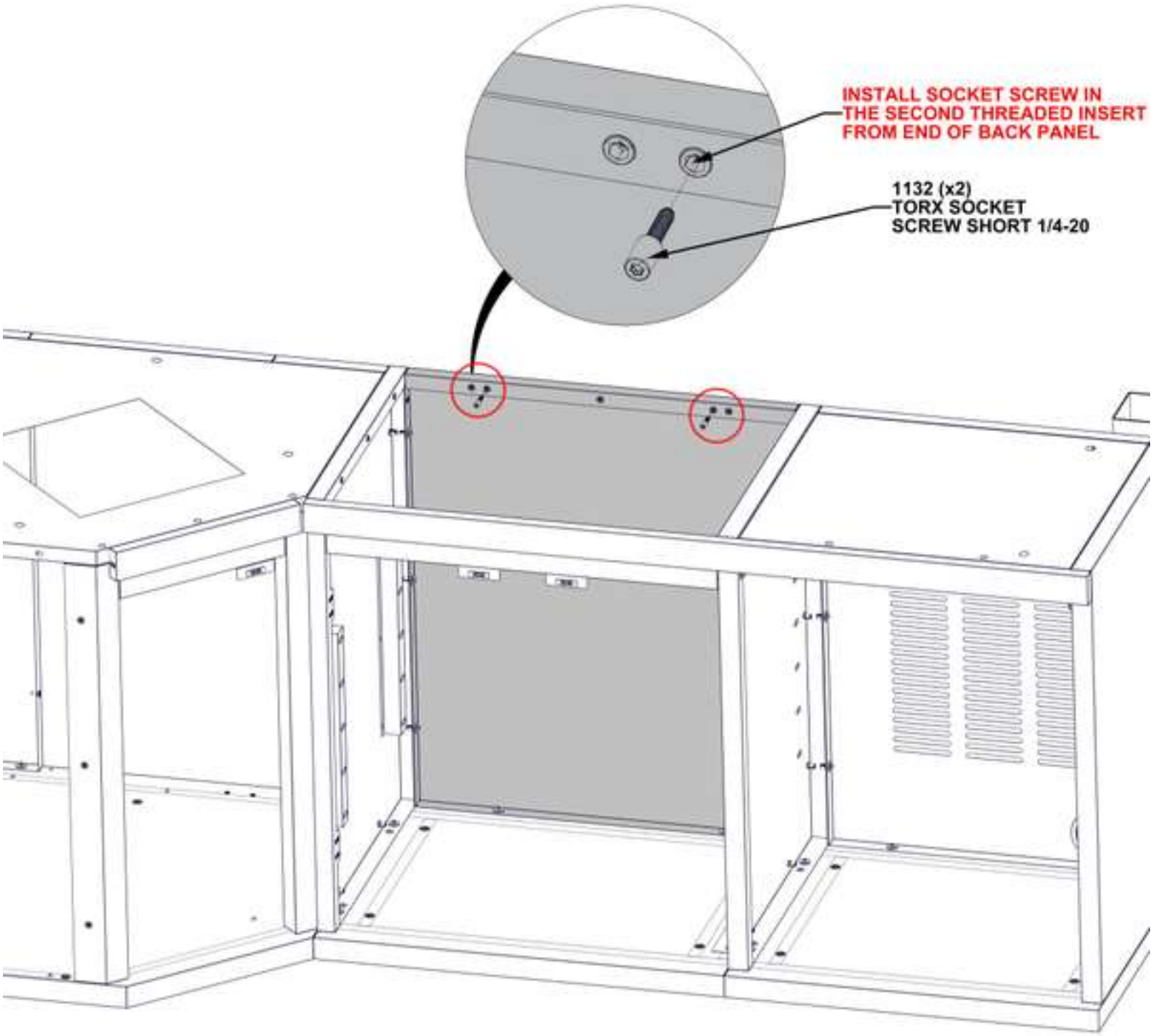

STEP 75A - SHELF CABINET ASSEMBLY



T2 RIGHT CABINET TABLETOP ASSEMBLY - A4M04452
(x1) 29 15/16"x22 7/16"x1 3/16" (30x569.5x760)

- ONLY KITCHEN CABINETS ARE SHOWN FOR DETAIL.
- POSITION TABLETOP ON CABINET.
- TOP SIDE OF TABLETOP WILL SIT FLUSH WITH BACK AND SIDE PANELS.

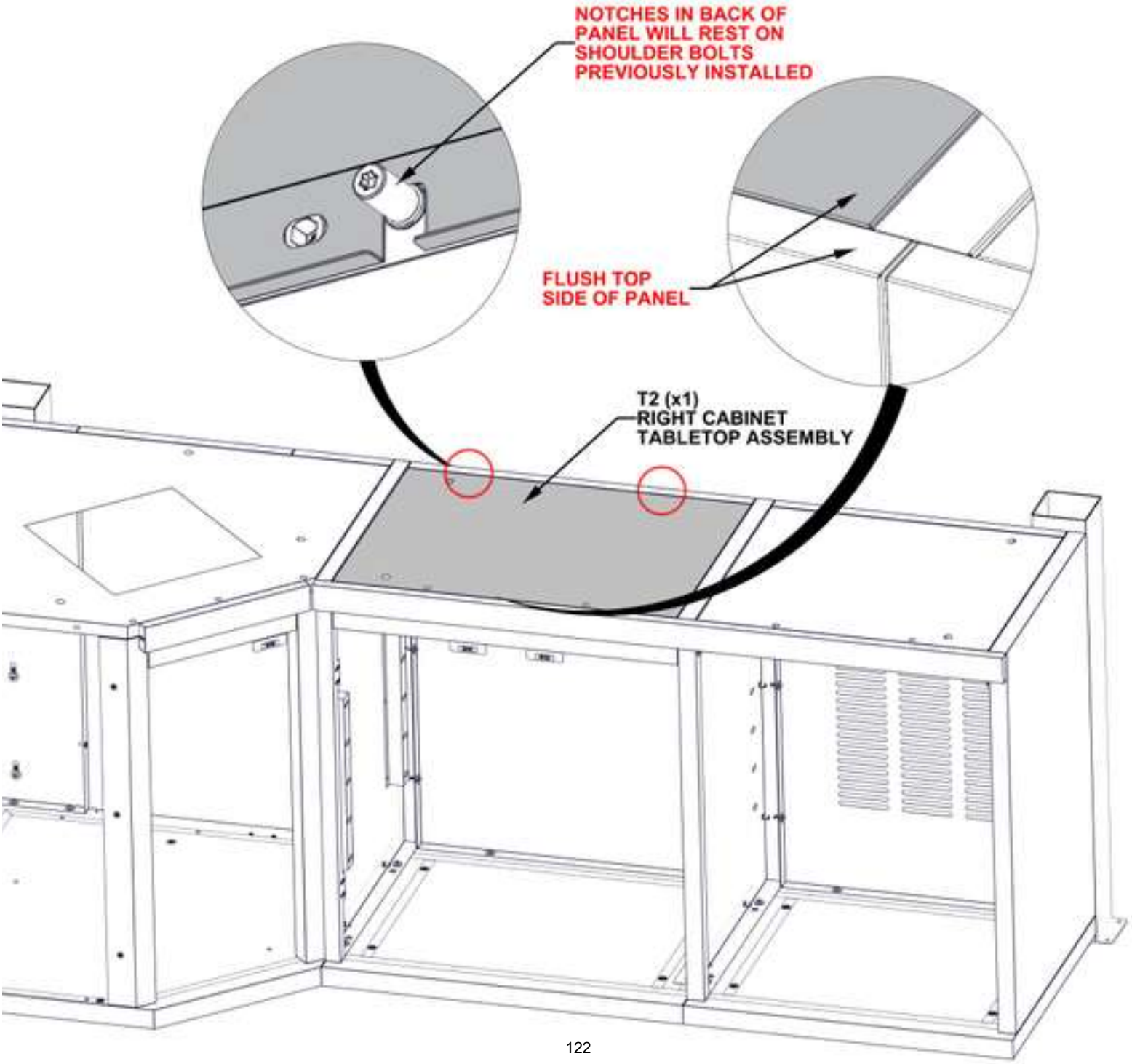

STEP 75B - SHELF CABINET ASSEMBLY

QTY	PART NUMBER	DESCRIPTION
9	H101202	TORX PAN HEAD 1/4-20x3/4 ASSY

- ONLY KITCHEN CABINETS ARE SHOWN FOR DETAIL.
- HARDWARE ATTACHES ON INSIDE OF CABINET

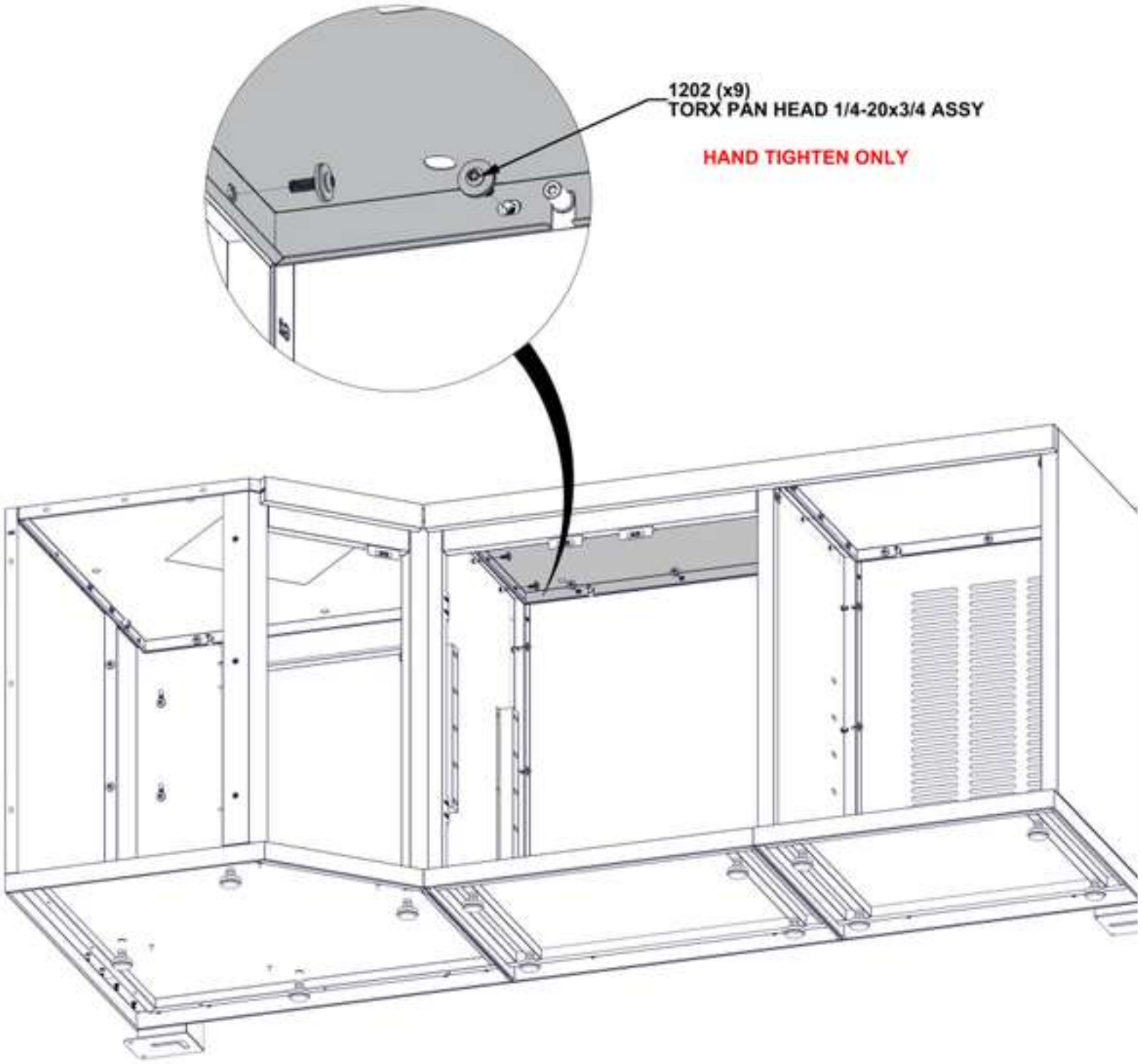

STEP 75C - SHELF CABINET ASSEMBLY

QTY	PART NUMBER	DESCRIPTION
2	H101132	TORX SOCKET SCREW SHORT 1/4-20

- ONLY KITCHEN CABINETS ARE SHOWN FOR DETAIL.
- FLUSH TOP SURFACE OF CABINET TABLETOP WITH BACK AND SIDE PANELS.
- SQUARE ALL SIDES OF CABINET BEFORE TIGHTENING HARDWARE.

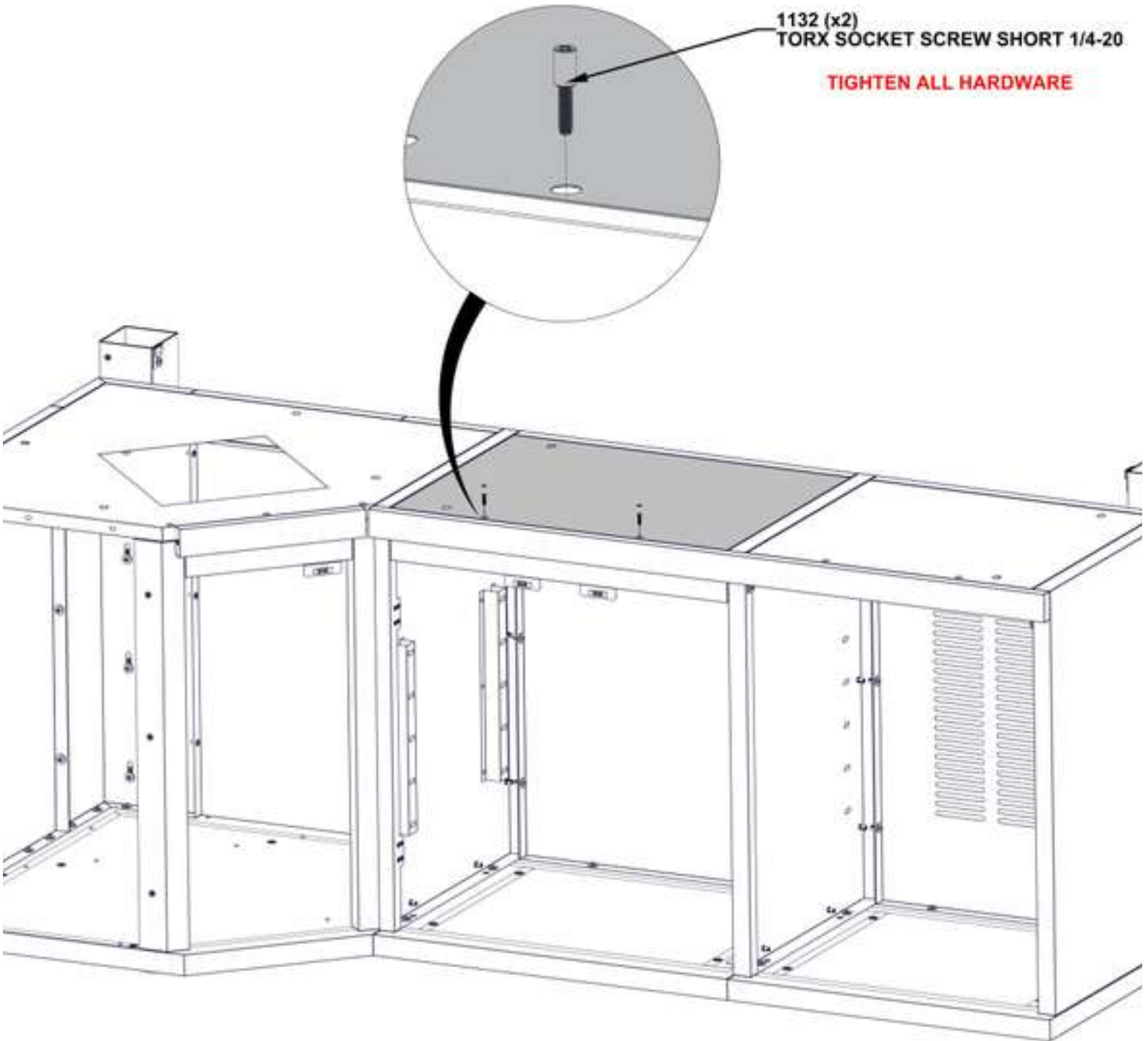

STEP 76 - SHELF CABINET ASSEMBLY



A5 SHELF BRACKET - A4M03141
(x8) 5/8"x7/8"x2 1/16" (16x22x53)

- ONLY KITCHEN CABINETS ARE SHOWN FOR DETAIL.
- ATTACH SHELF BRACKETS ON BOTH SIDES OF CENTER CABINET.

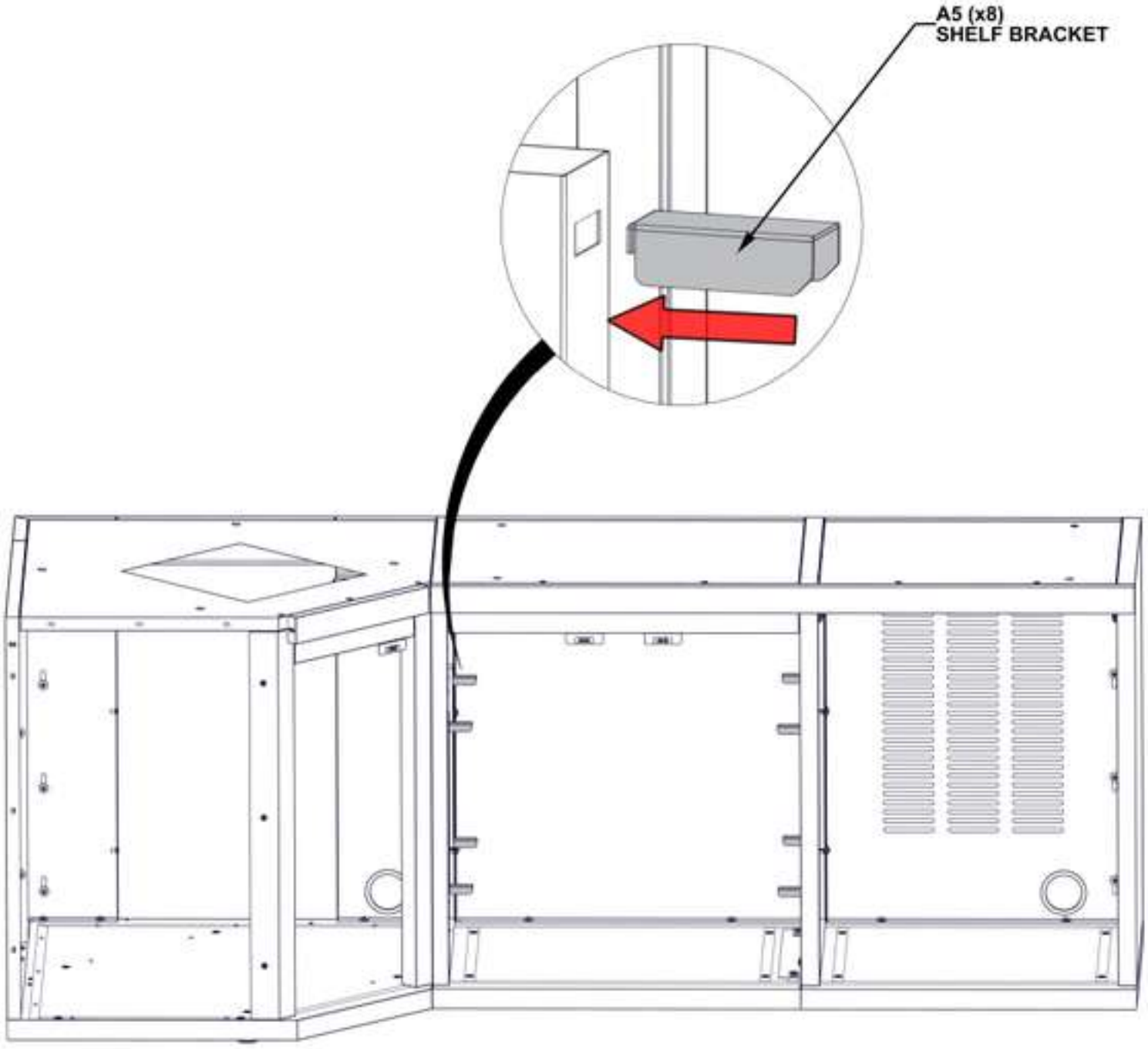

STEP 77 - SHELF CABINET ASSEMBLY



L1 RIGHT CABINET SHELF - A4M04496
(x2) 30 1/16"x23 1/4"x1" (25x590x764.2)

- ONLY KITCHEN CABINETS ARE SHOWN FOR DETAIL.
- INSTALL CABINET SHELVES IN CENTER CABINET.
- SHELVES WILL REST ON SHELF BRACKETS FROM PREVIOUS STEP AND CAN BE POSITIONED AS DESIRED.

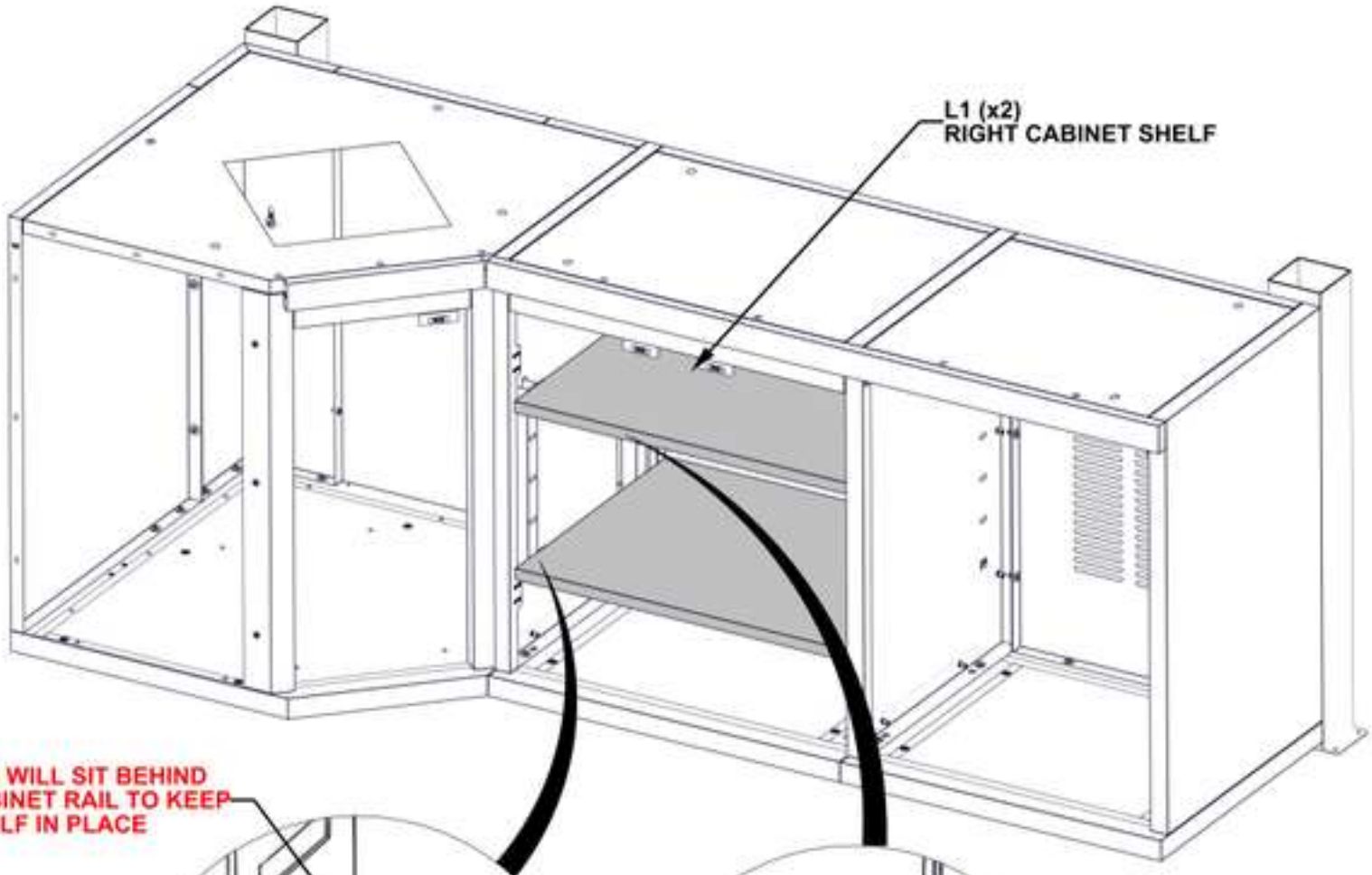

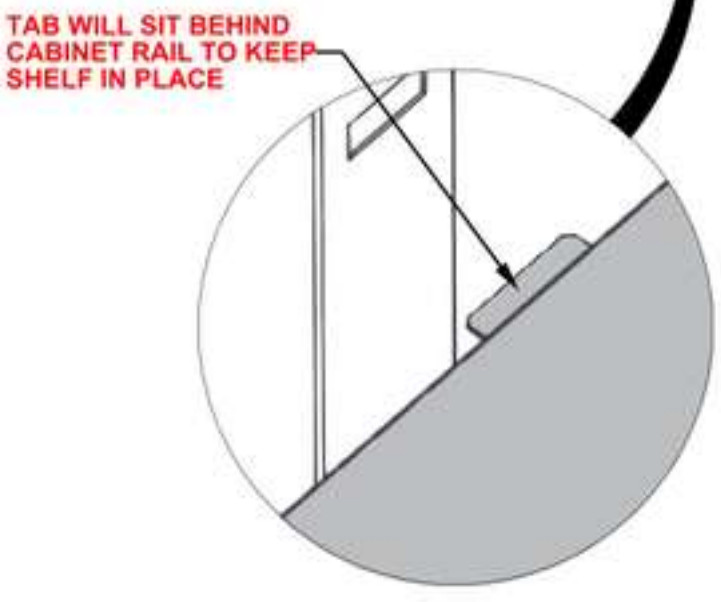

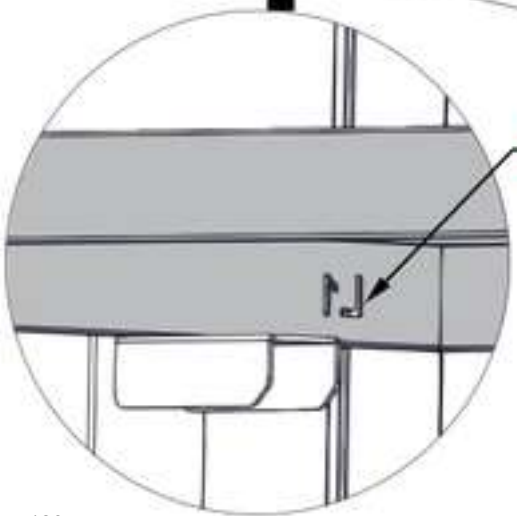

STEP 78 - STORAGE CABINET ASSEMBLY

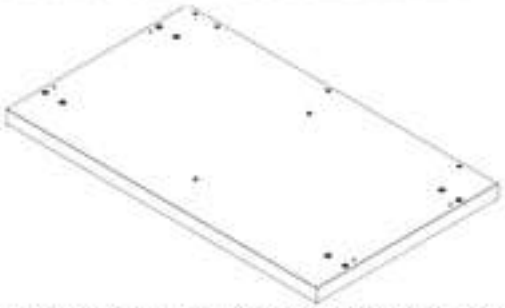

F4 LEFT CABINET FLOOR PANEL ASSEMBLY - A4M04463
(x1) 42 7/16"x24 3/4"x1 3/4" (45x628.50x1077.50)

- ONLY KITCHEN CABINETS ARE SHOWN FOR DETAIL.
- POSITION FLOOR PANEL AS SHOWN BELOW.
- EACH FLOOR PANEL HAS FACTORY INSTALLED ADJUSTABLE FEET. USE PROVIDED HEX DRIVER TO ADJUST EACH FOOT UNTIL PANEL IS LEVEL.

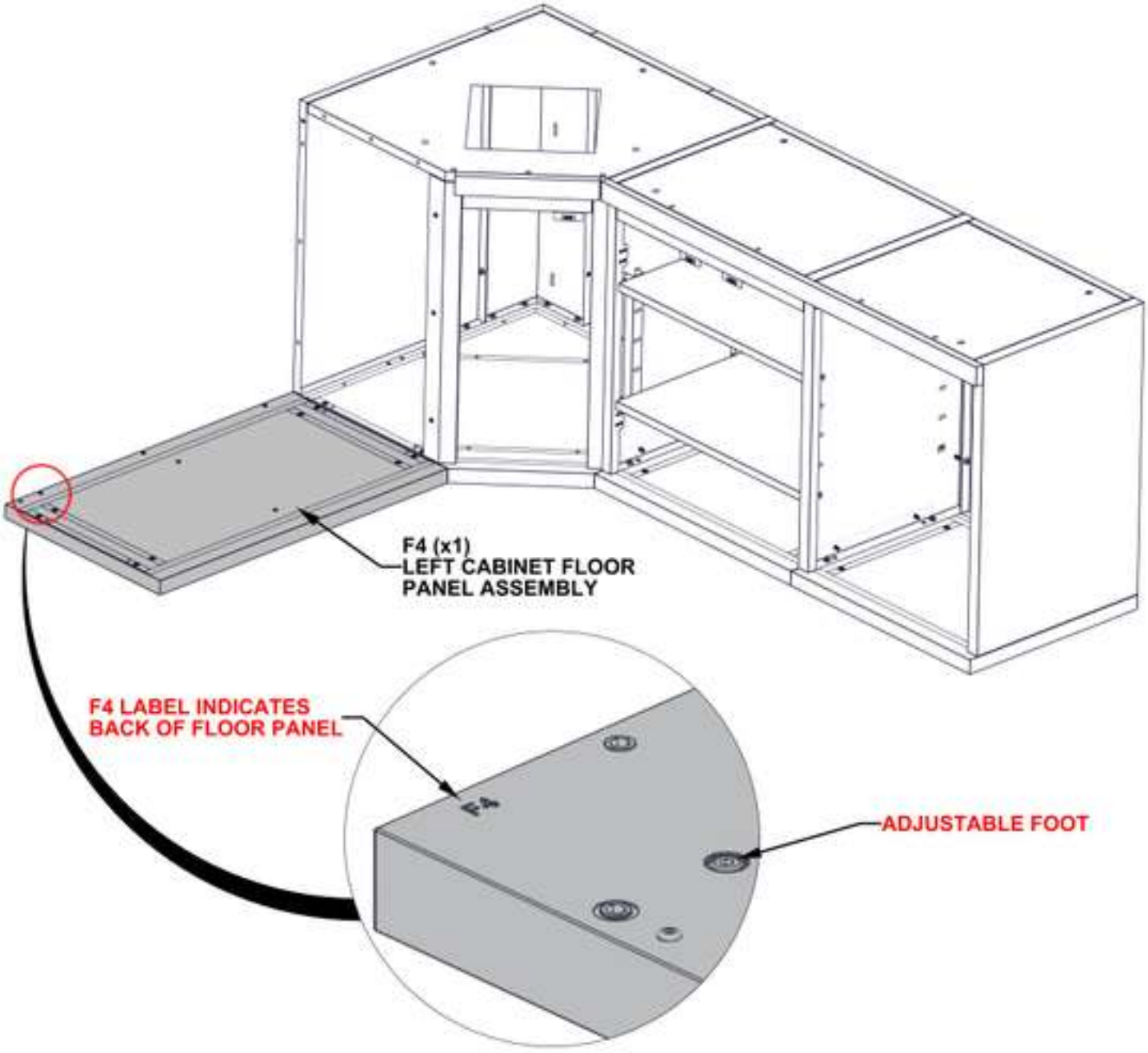

STEP 79A - STORAGE CABINET ASSEMBLY



QTY	PART NUMBER	DESCRIPTION
5	H101202	TORX PAN HEAD 1/4-20x3/4 ASSY

S4 LEFT CABINET SIDE PANEL ASSEMBLY R - A4M04465
(x1) 35 1/4"x23 11/16"x1 7/8" (48.3x601.5x896)

- ONLY KITCHEN CABINETS ARE SHOWN FOR DETAIL.

STEP 79B - STORAGE CABINET ASSEMBLY

QTY	PART NUMBER	DESCRIPTION
6	H101202	TORX PAN HEAD 1/4-20x3/4 ASSY

- ONLY KITCHEN CABINETS ARE SHOWN FOR DETAIL.
- IT IS RECOMMENDED TO USE PROVIDED ANGLE DRIVER TO INSTALL HARDWARE IN THIS STEP.
- HARDWARE ATTACHES ON INSIDE OF CABINET.

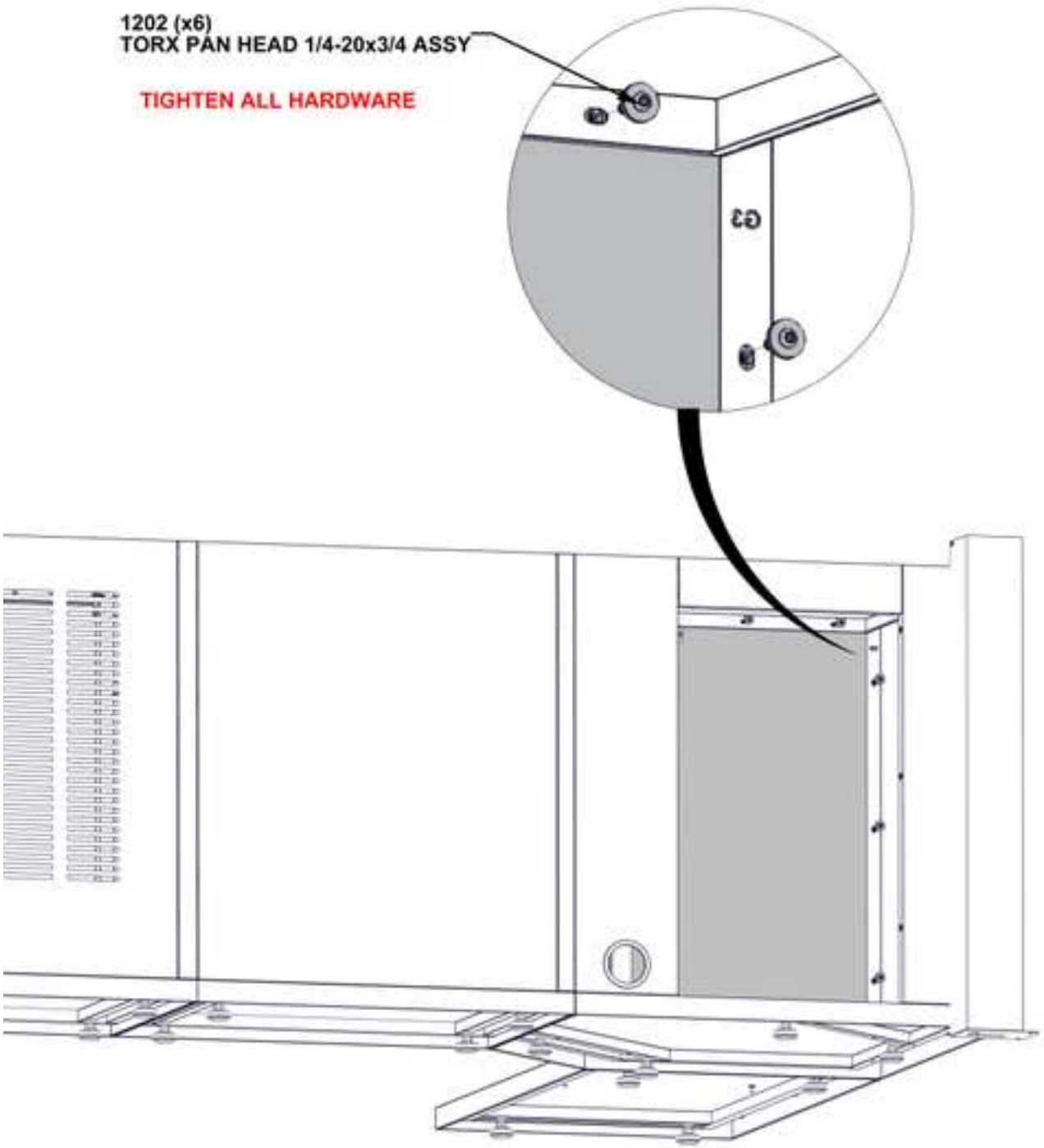

STEP 80 - STORAGE CABINET ASSEMBLY



A6 ANGLED BRACKET - A4M03053
(x1) 1 3/8"x1 15/16"x17 1/8" (35x50x435)

QTY	PART NUMBER	DESCRIPTION
4	H101202	TORX PAN HEAD 1/4-20x3/4 ASSY

- ONLY KITCHEN CABINETS ARE SHOWN FOR DETAIL.
- HARDWARE ATTACHES ON INSIDE OF CABINET

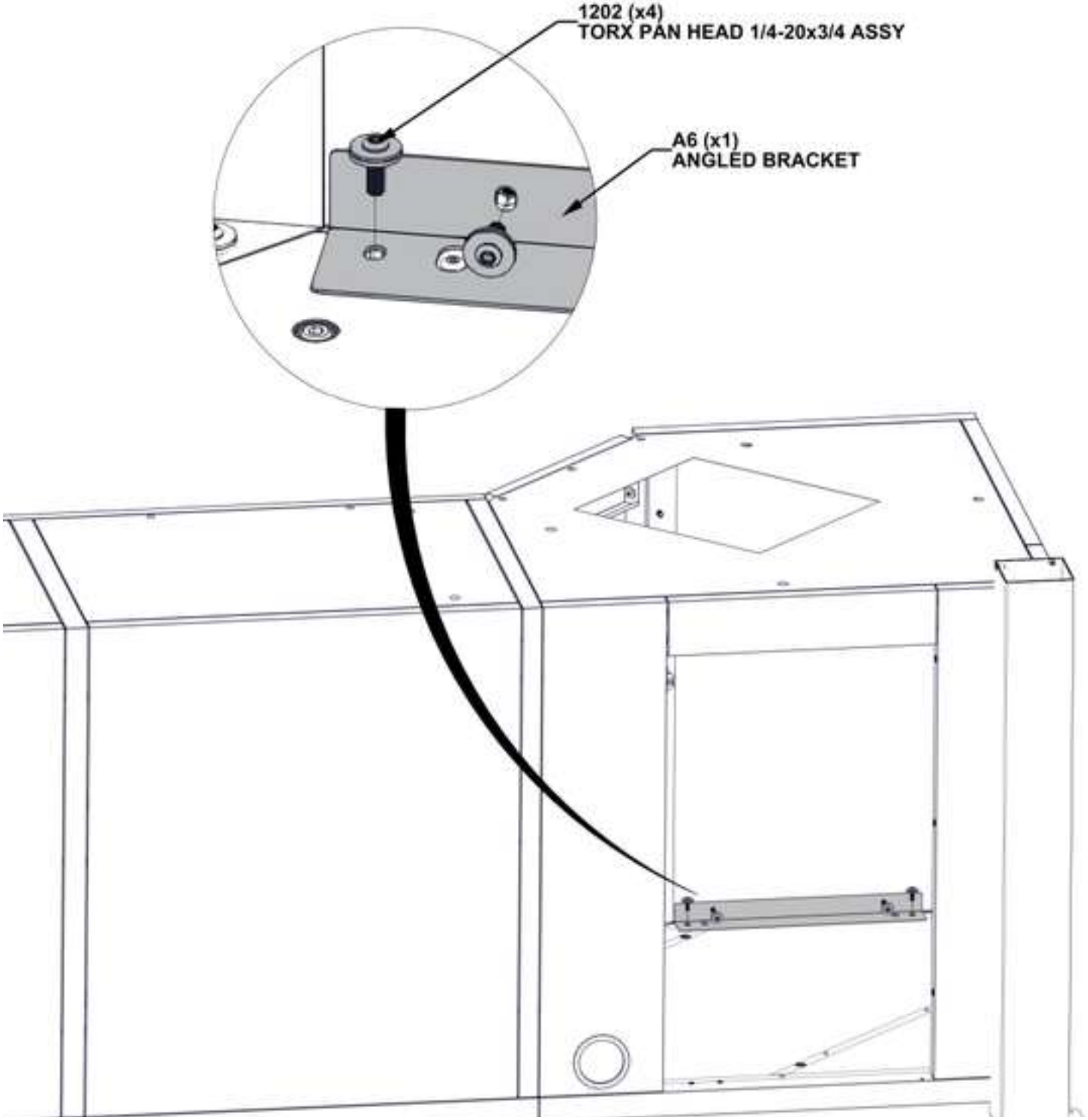

STEP 81A - STORAGE CABINET ASSEMBLY



G6 LEFT CABINET BACK PANEL ASSEMBLY - A4M04467
(x1) 39 9/16"x35 1/4"x1 3/16" (30x896x1004.5)

QTY	PART NUMBER	DESCRIPTION
6	H101202	TORX PAN HEAD 1/4-20x3/4 ASSY

- ONLY KITCHEN CABINETS ARE SHOWN FOR DETAIL.

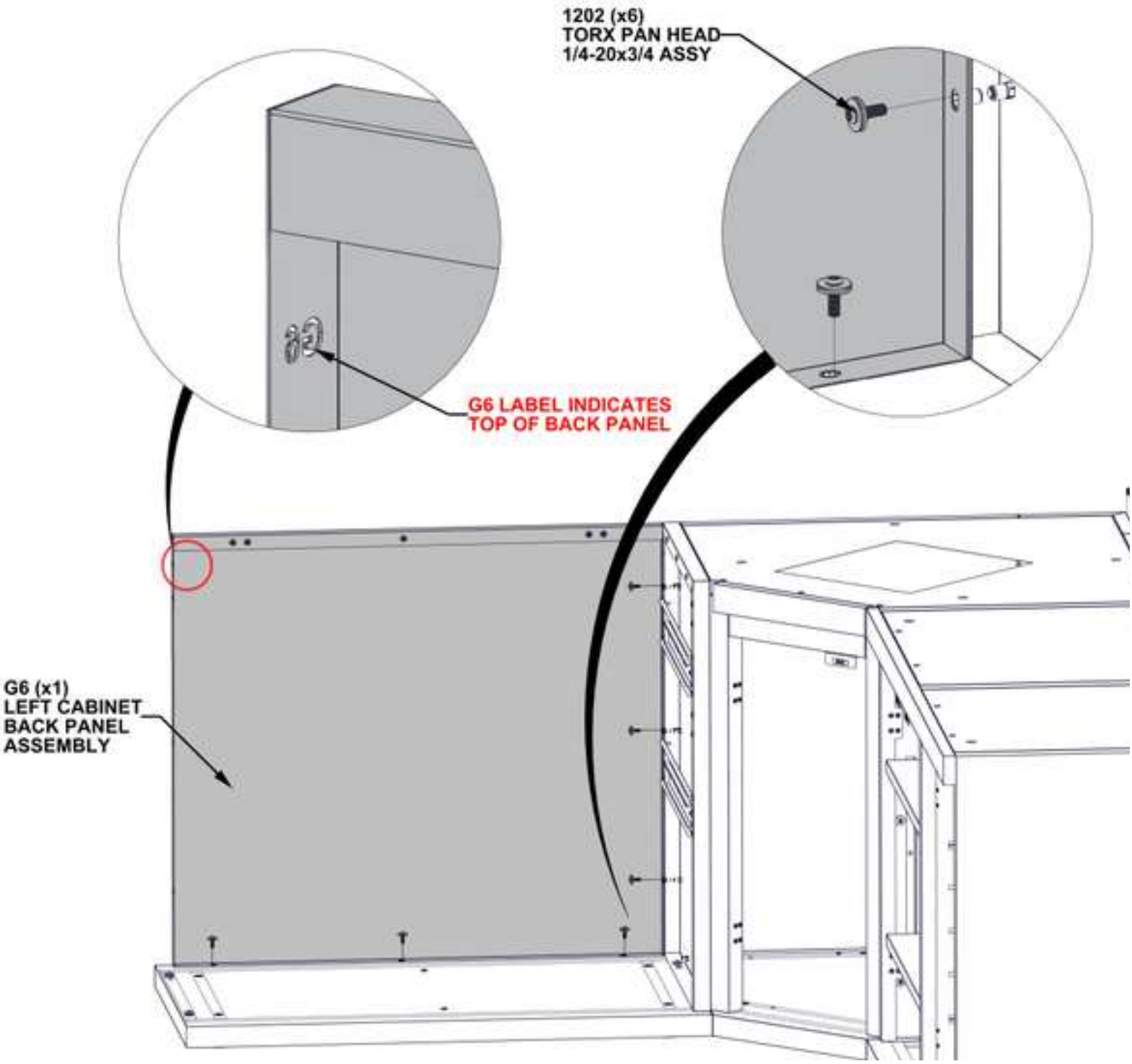

STEP 81B - STORAGE CABINET ASSEMBLY

QTY	PART NUMBER	DESCRIPTION
2	H101132	TORX SOCKET SCREW SHORT 1/4-20

- ONLY KITCHEN CABINETS ARE SHOWN FOR DETAIL.

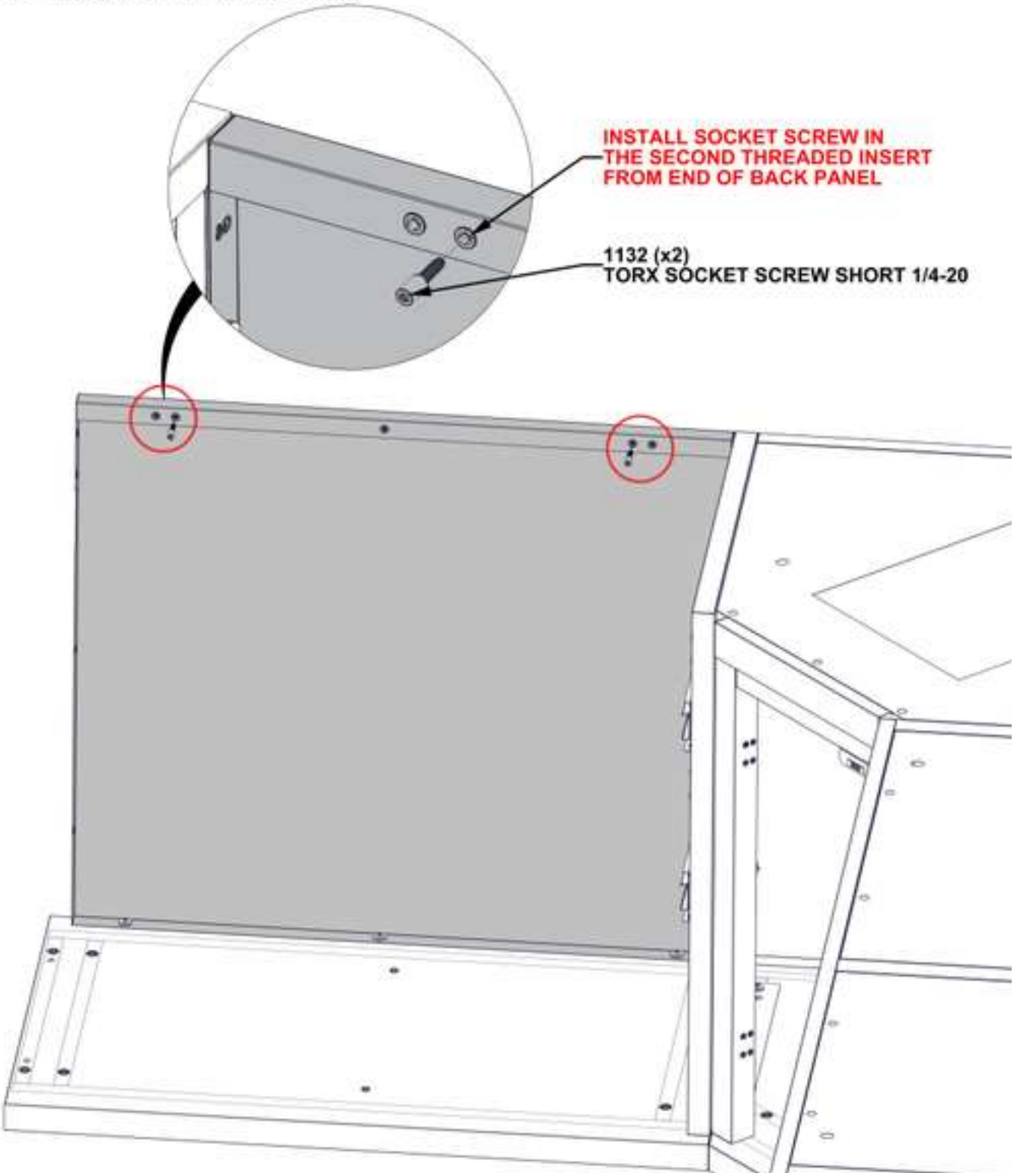

STEP 82 - STORAGE CABINET ASSEMBLY



QTY	PART NUMBER	DESCRIPTION
2	H101202	TORX PAN HEAD 1/4-20x3/4 ASSY

S6 LEFT CABINET SIDE PANEL ASSEMBLY M - A4M04469
(x1) 34 1/8"x23 9/16"x2 3/4" (69.6x599x866)

- ONLY KITCHEN CABINETS ARE SHOWN FOR DETAIL.

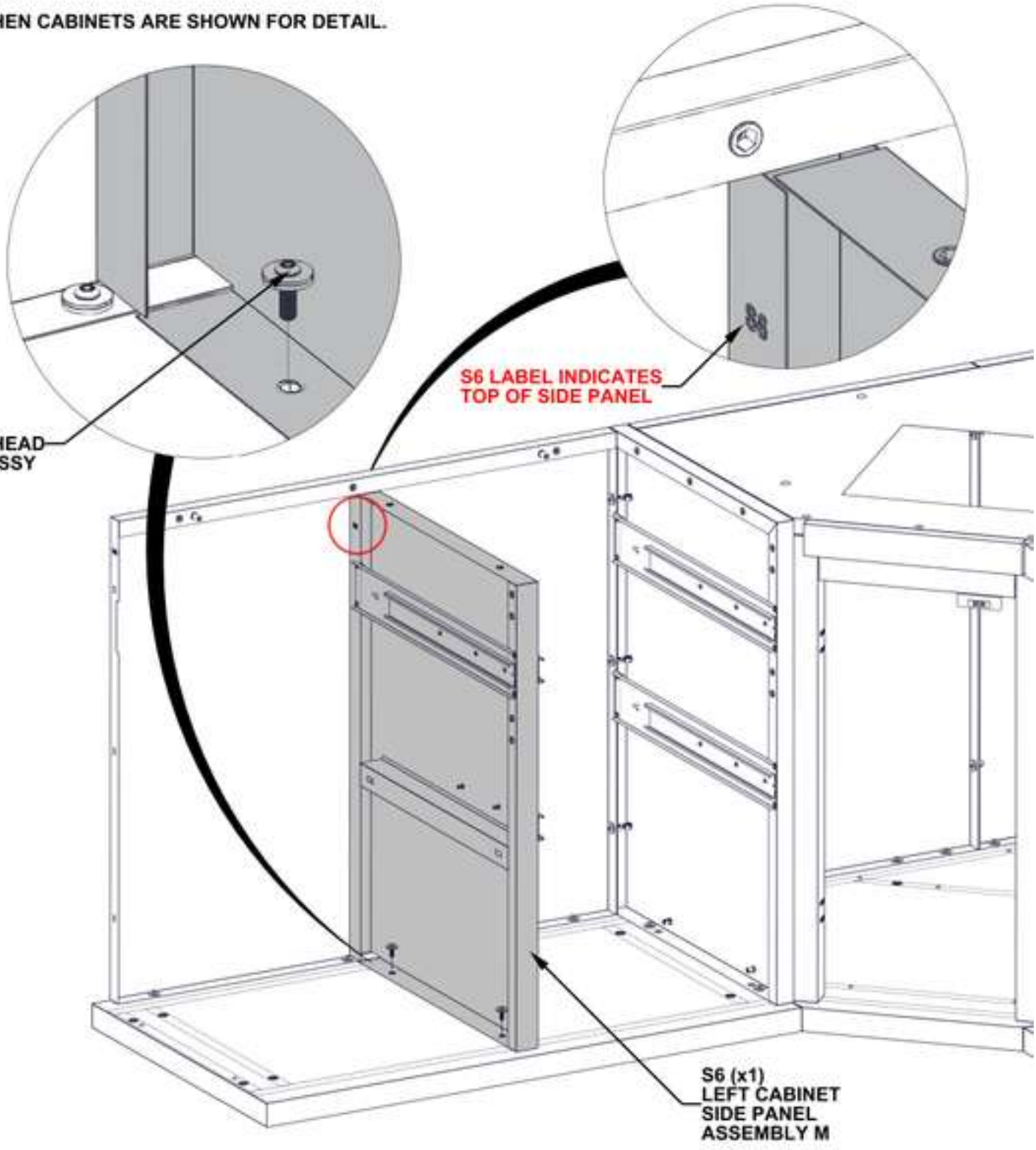

STEP 83 - STORAGE CABINET ASSEMBLY



H9 LEFT CABINET HORIZONTAL BEAM ASSEMBLY - A4M04472
(x1) 18 13/16"x3 1/8"x1 3/16" (30x80x477.4)

QTY	PART NUMBER	DESCRIPTION
4	H101202	TORX PAN HEAD 1/4-20x3/4 ASSY

- ONLY KITCHEN CABINETS ARE SHOWN FOR DETAIL.
- HARDWARE ATTACHES ON INSIDE OF CABINET

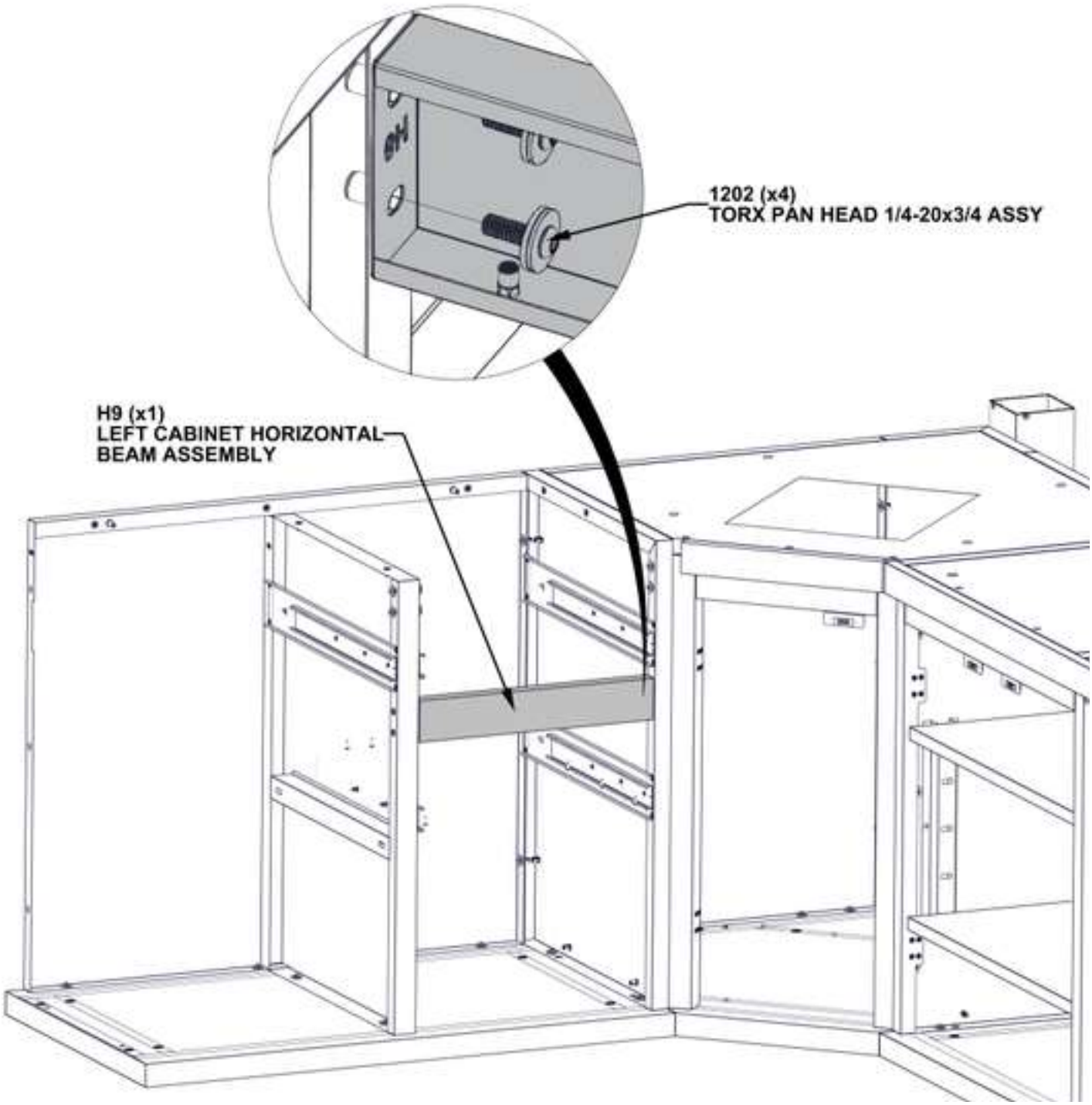

STEP 84 - STORAGE CABINET ASSEMBLY



S5 LEFT CABINET SIDE PANEL ASSEMBLY L - A4M04466
(x1) 35 1/4"x23 11/16"x1 7/8" (48.3x601x896)

QTY	PART NUMBER	DESCRIPTION
5	H101202	TORX PAN HEAD 1/4-20x3/4 ASSY

- ONLY KITCHEN CABINETS ARE SHOWN FOR DETAIL.

1202 (x5)
TORX PAN HEAD
1/4-20x3/4 ASSY

FLUSH TOP AND
BACK SIDE OF PANEL

S5 (x1)
LEFT CABINET SIDE
PANEL ASSEMBLY L

STEP 85 - STORAGE CABINET ASSEMBLY

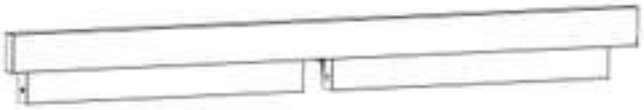

H6 LEFT CABINET TRIM PANEL ASSEMBLY R - A4M04471
(x1) 42 7/16"x4 3/8"x2 3/16" (56x111.5x1078.0)

QTY	PART NUMBER	DESCRIPTION
8	H101202	TORX PAN HEAD 1/4-20x3/4 ASSY

- ONLY KITCHEN CABINETS ARE SHOWN FOR DETAIL.
- HARDWARE ATTACHES ON INSIDE OF CABINET

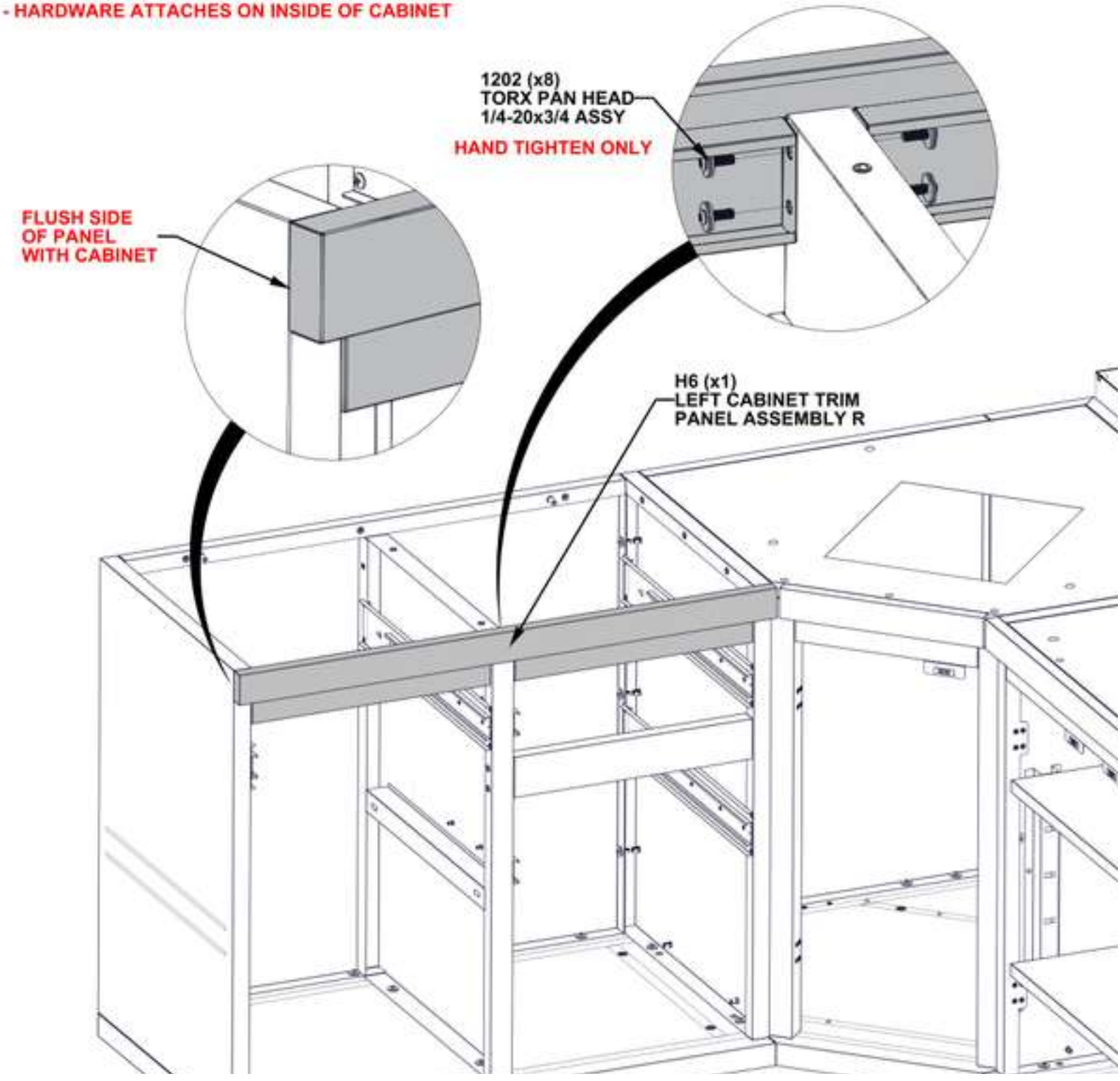

STEP 86 - STORAGE CABINET ASSEMBLY

QTY	PART NUMBER	DESCRIPTION
2	H101289	PAN HEAD SCREW 8-32x1/2" SS



H9 LEFT CABINET HORIZONTAL BEAM ASSEMBLY - A4M04472
(x1) 18 13/16"x3 1/8"x1 3/16" (30x80x477.4)



A2 MAGNET BRACKET - A4M03026
(x1) 1"x1 1/4"x3 1/8" (25x31x80)

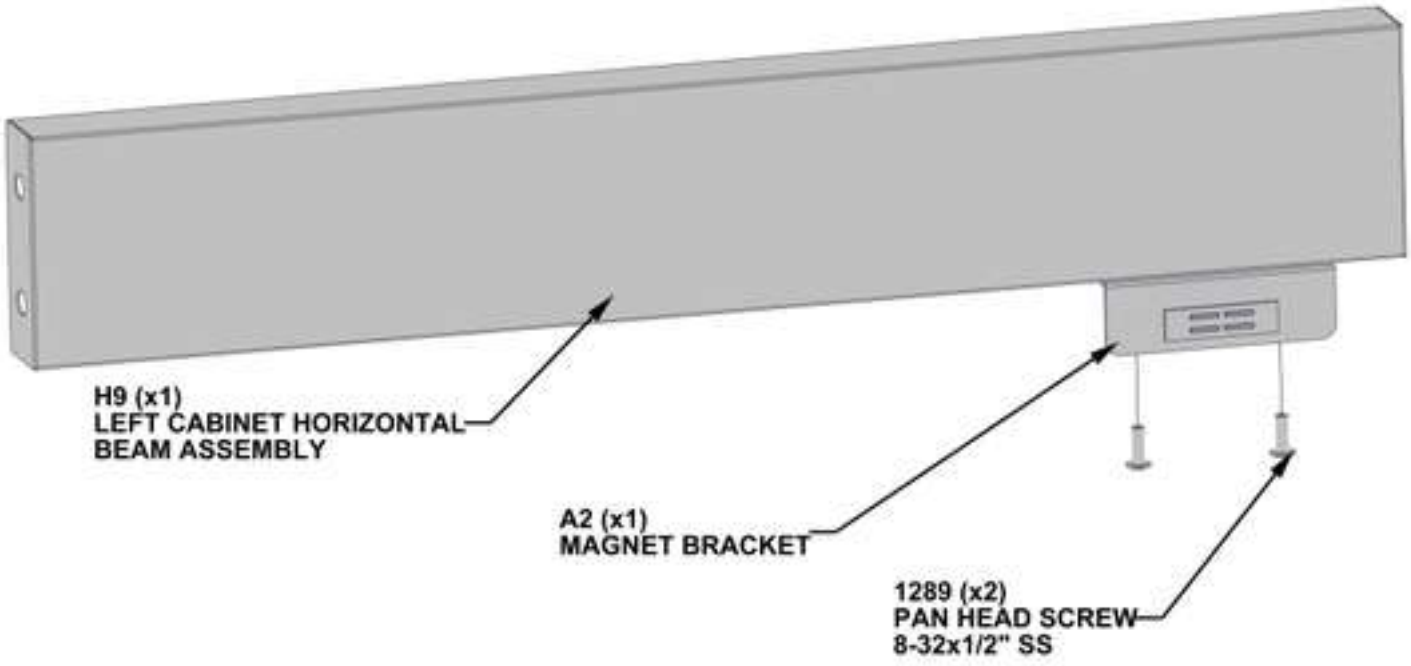

STEP 87 - STORAGE CABINET ASSEMBLY



TRIM PANEL ASSEMBLY
FROM STEP 86

QTY	PART NUMBER	DESCRIPTION
4	H101202	TORX PAN HEAD 1/4-20x3/4 ASSY

- ONLY KITCHEN CABINETS ARE SHOWN FOR DETAIL.
- HARDWARE ATTACHES ON INSIDE OF CABINET

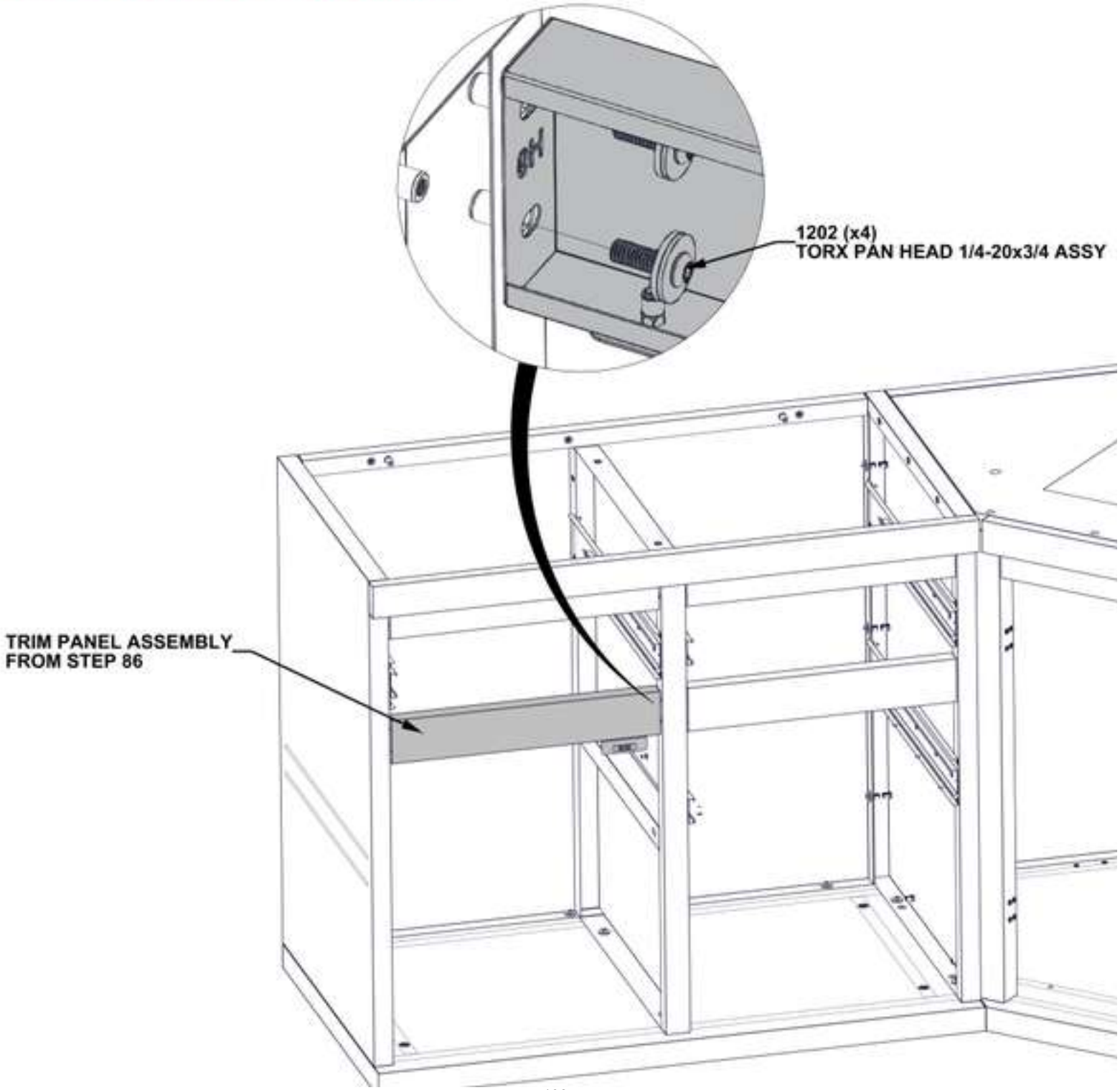

STEP 88A - STORAGE CABINET ASSEMBLY

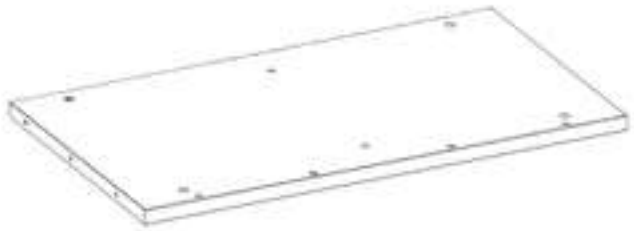

T4 LEFT CABINET TABLETOP PANEL ASSEMBLY - A4M04468
(x1) 39 9/16"x22 7/16"x1 3/16" (30x569.5x1004.5)

- ONLY KITCHEN CABINETS ARE SHOWN FOR DETAIL.
- POSITION TABLETOP ON CABINET.
- TOP SIDE OF TABLETOP WILL SIT FLUSH WITH BACK AND SIDE PANELS.

STEP 88B - STORAGE CABINET ASSEMBLY

QTY	PART NUMBER	DESCRIPTION
9	H101202	TORX PAN HEAD 1/4-20x3/4 ASSY

- ONLY KITCHEN CABINETS ARE SHOWN FOR DETAIL.
- HARDWARE ATTACHES ON INSIDE OF CABINET

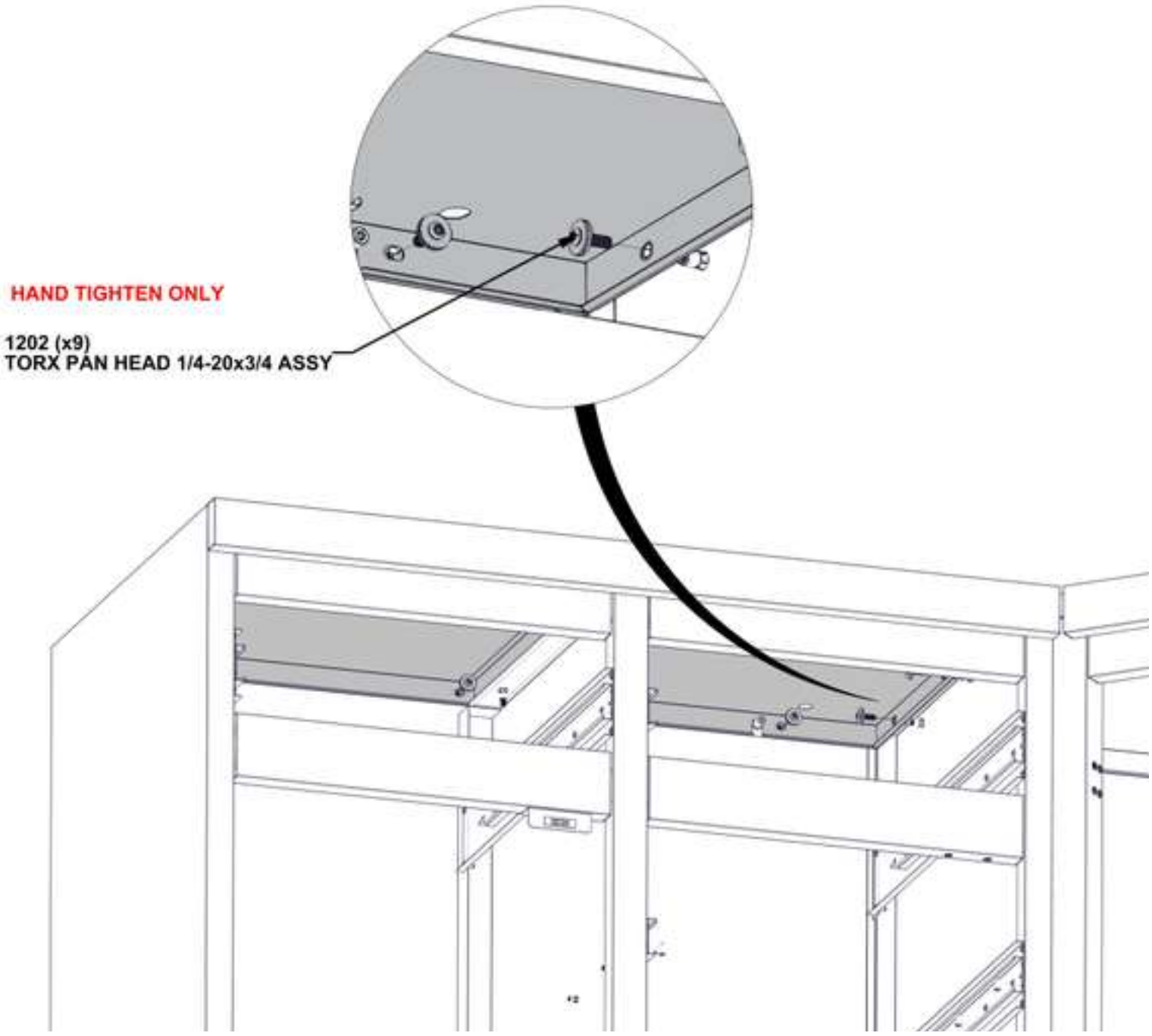

STEP 88C - STORAGE CABINET ASSEMBLY

QTY	PART NUMBER	DESCRIPTION
6	H101132	TORX SOCKET SCREW SHORT 1/4-20

- ONLY KITCHEN CABINETS ARE SHOWN FOR DETAIL.
- FLUSH TOP SURFACE OF CABINET TABLETOP WITH BACK AND SIDE PANELS.
- SQUARE ALL SIDES OF CABINET BEFORE TIGHTENING HARDWARE.

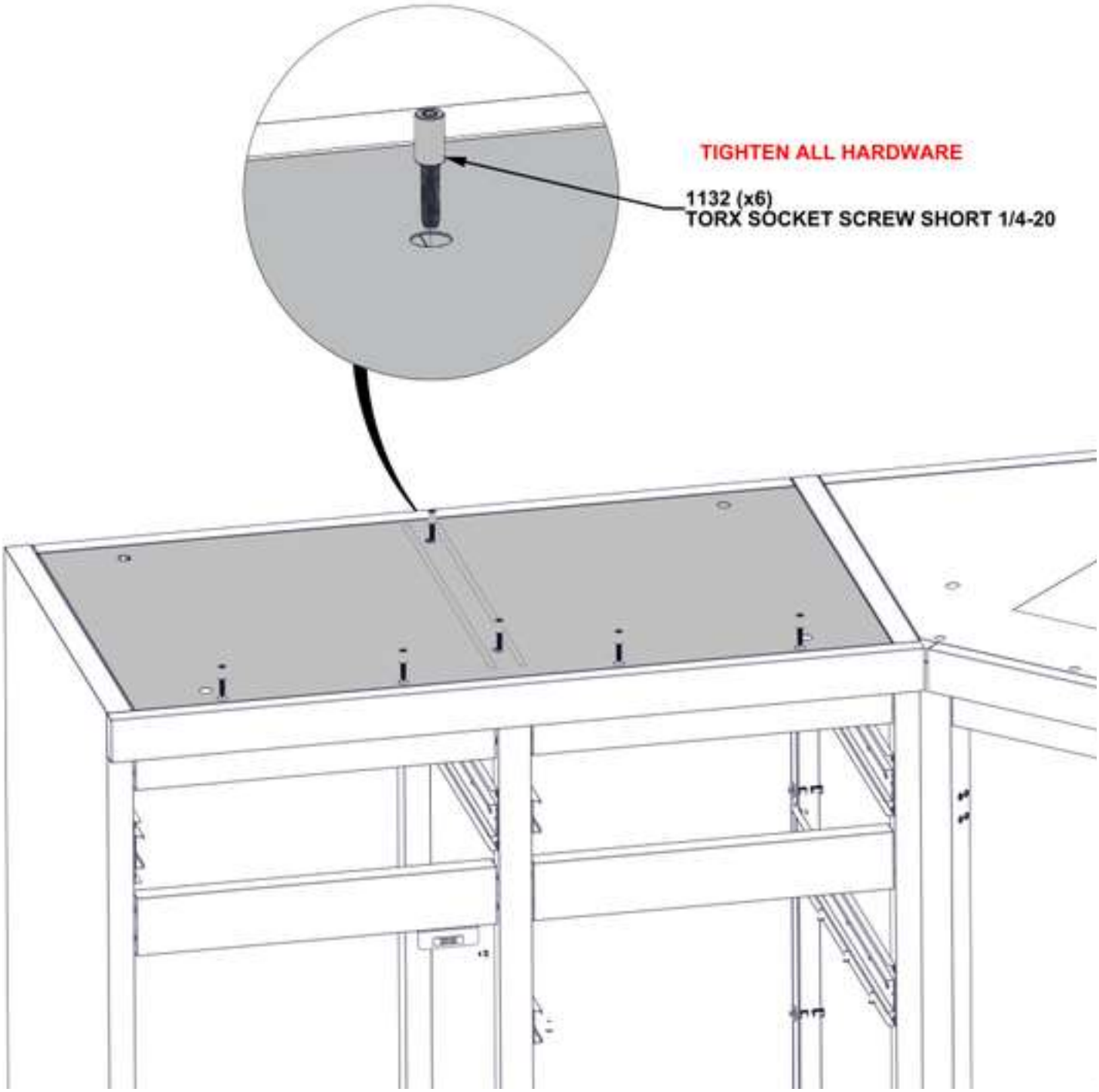

STEP 89 - BACK WALL ASSEMBLY



P05 BACK POST - A4M04191
(x1) 1 9/16"x3 1/8"x57 3/4" (42.5x80x1467)

QTY	PART NUMBER	DESCRIPTION
4	H101202	TORX PAN HEAD 1/4-20x3/4 ASSY

- CABINET POST FEET MAY NEED TO BE ADJUSTED TO ALLOW BACK POST TO REST ON TOP SURFACE OF CABINETS.
- HARDWARE ATTACHES ON INSIDE OF GABLE ARCH AT TOP OF BACK POST.

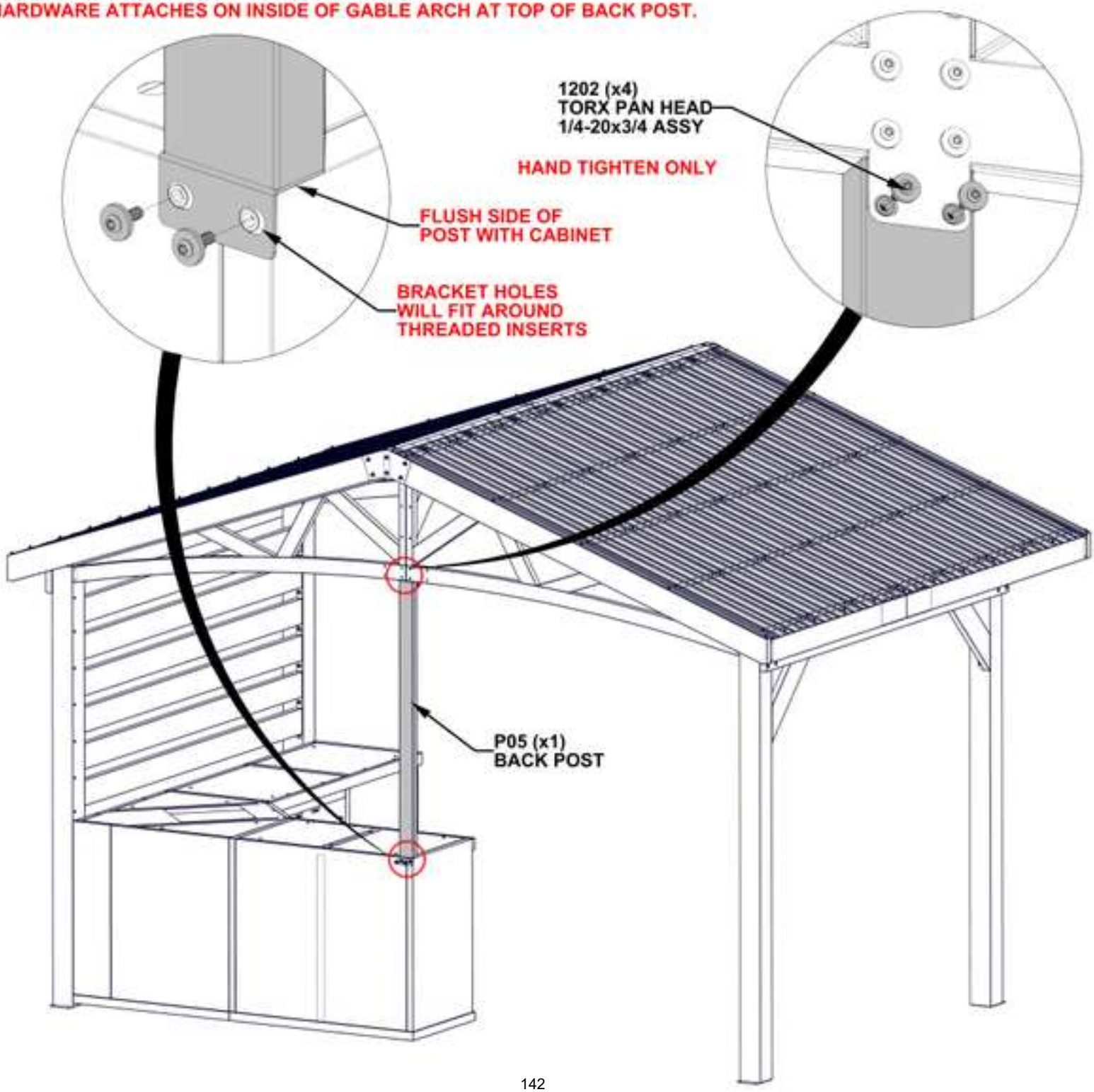

STEP 90 - BACK WALL ASSEMBLY

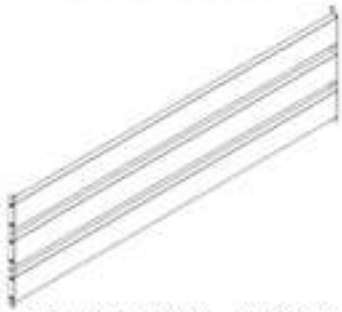

B10 WALL PANEL - A4M04193
(x1) 1 7/16"x22 11/16"x75 3/8" (36x576.5x1915)

QTY	PART NUMBER	DESCRIPTION
6	H101202	TORX PAN HEAD 1/4-20x3/4 ASSY

- IT IS RECOMMENDED TO USE PROVIDED ANGLE DRIVER TO INSTALL HARDWARE IN THIS STEP.

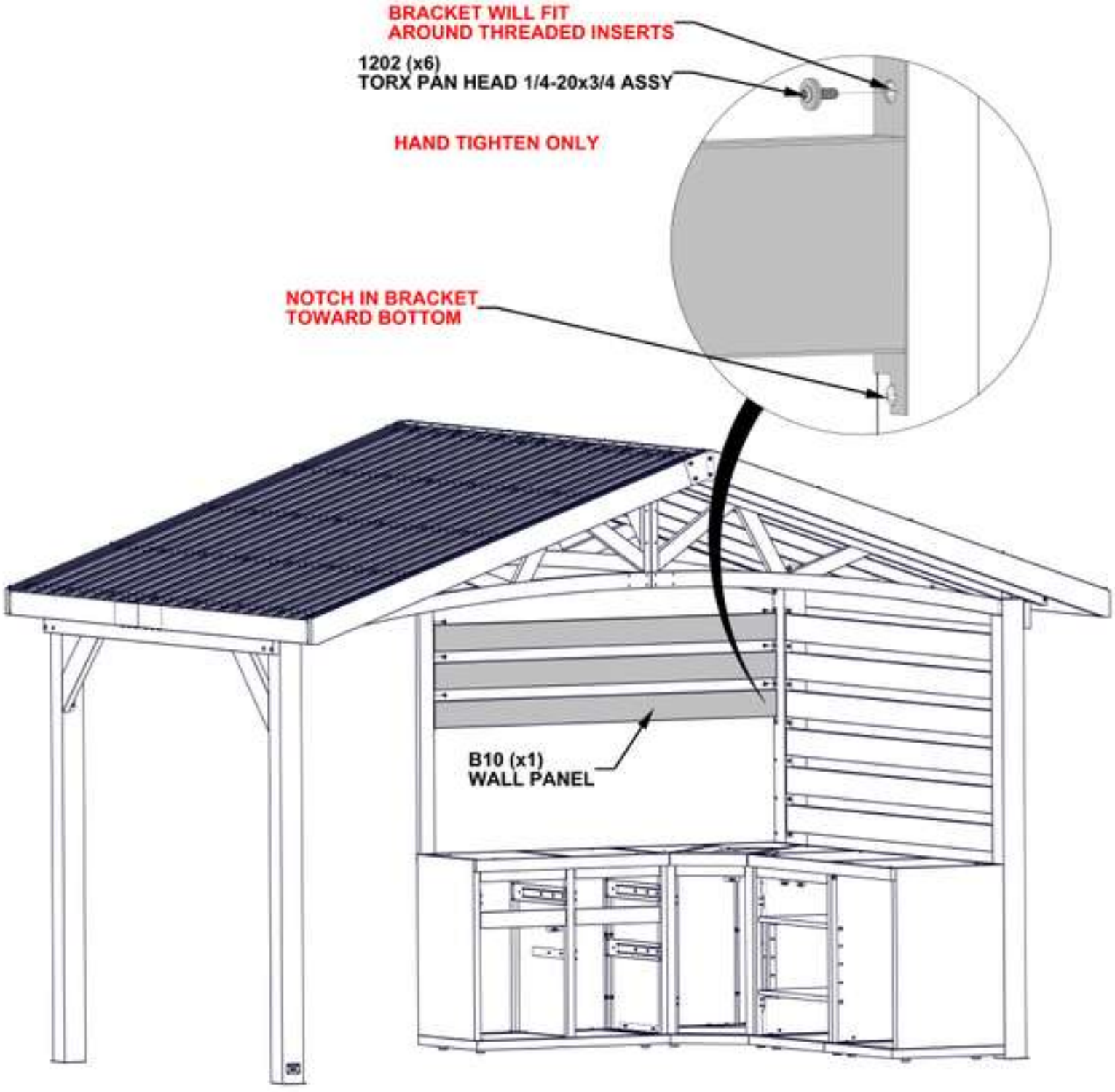

STEP 91 - BACK WALL ASSEMBLY

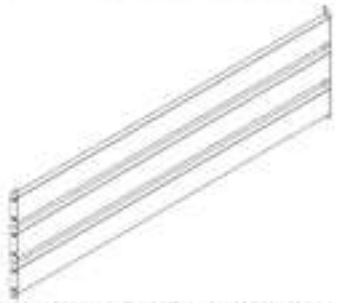

B10 WALL PANEL - A4M04193
(x1) 1 7/16"x22 11/16"x75 3/8" (36x576.5x1915)

QTY	PART NUMBER	DESCRIPTION
8	H101202	TORX PAN HEAD 1/4-20x3/4 ASSY

- IT IS RECOMMENDED TO USE PROVIDED ANGLE DRIVER TO INSTALL HARDWARE IN THIS STEP.

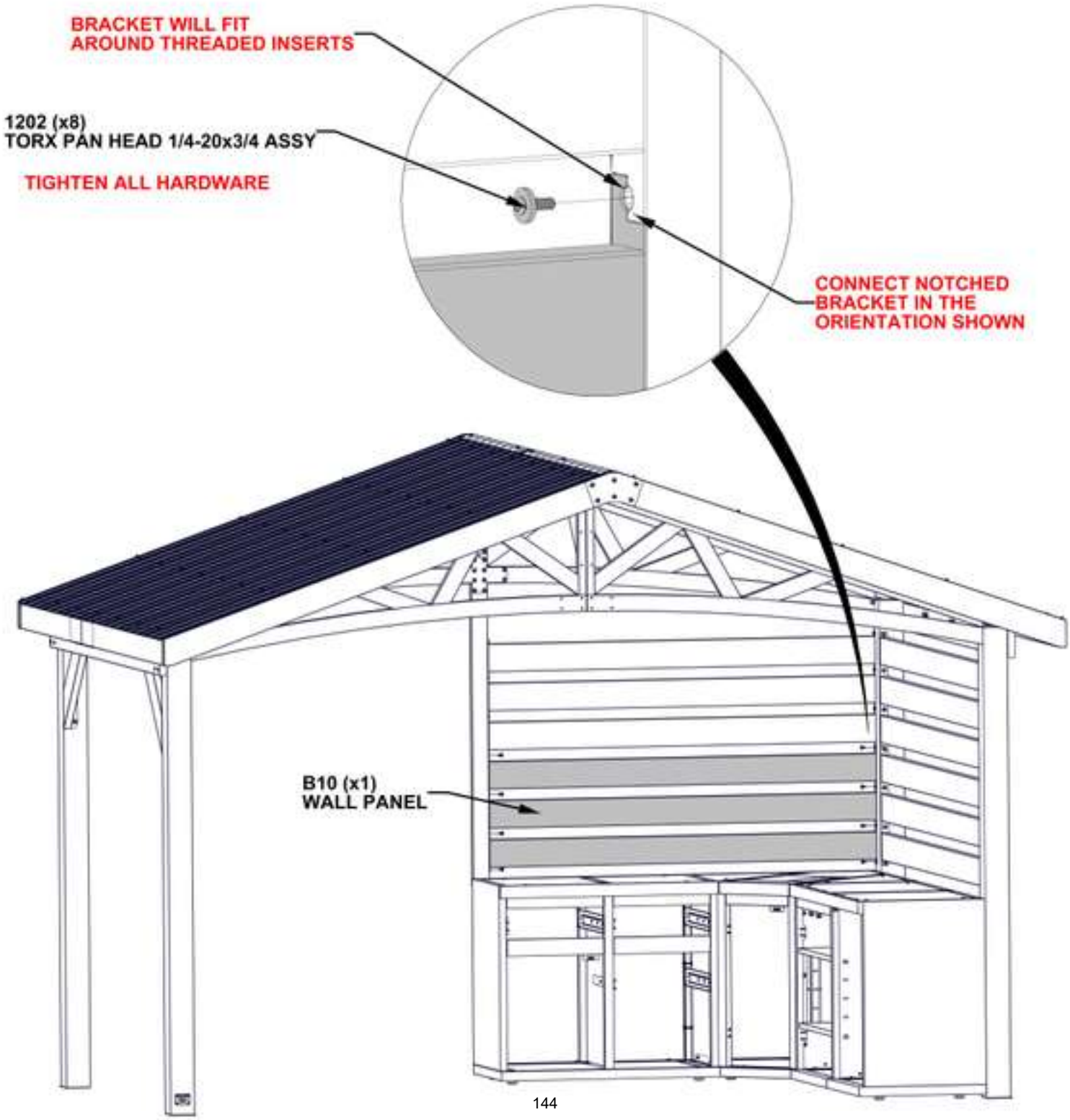

STEP 92A - SINK PRE-ASSEMBLY



A16 SINK ASSEMBLY - A4M03143
(x1) 15 1/8"x15 5/16"x16 7/8" (384x389x429)

---

1. INSTALLING THE SINK DRAIN

- SET DRAIN INSIDE OF SINK BODY, PLACING FOAM GASKET BETWEEN SURFACES.
- FASTEN IN PLACE USING RUBBER GASKET AND DRAIN NUT FROM BOTTOM SIDE.

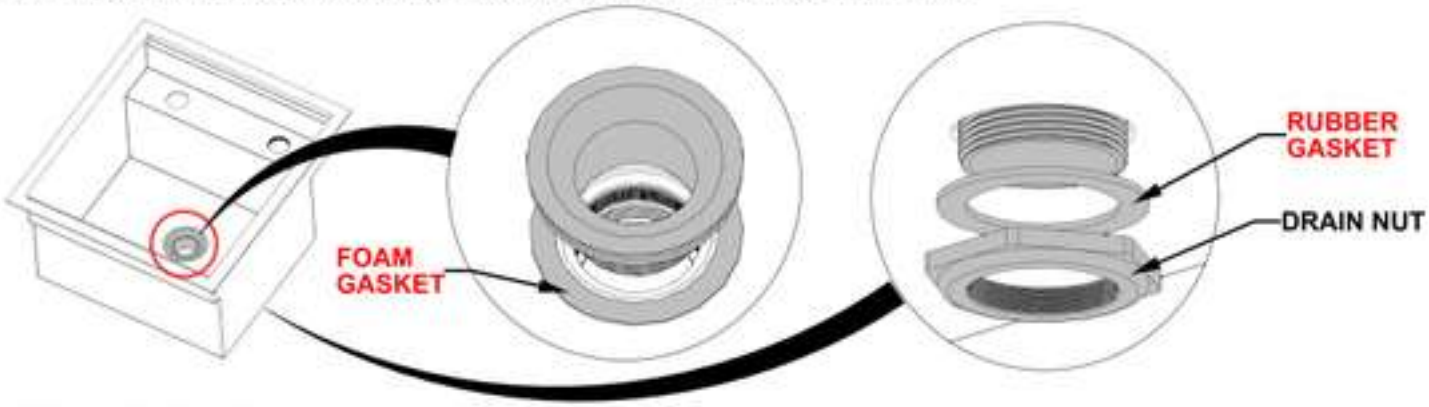

2. INSTALLING THE FAUCET

- INSTALL FAUCET BY PLACING HANDLE AND SPOUT INTO SINK OPENINGS AND SECURING IN PLACE VIA NUT.
- INSERT SCREWS TO LOCK.
- CONNECT WATER FAUCET LINES TOGETHER.

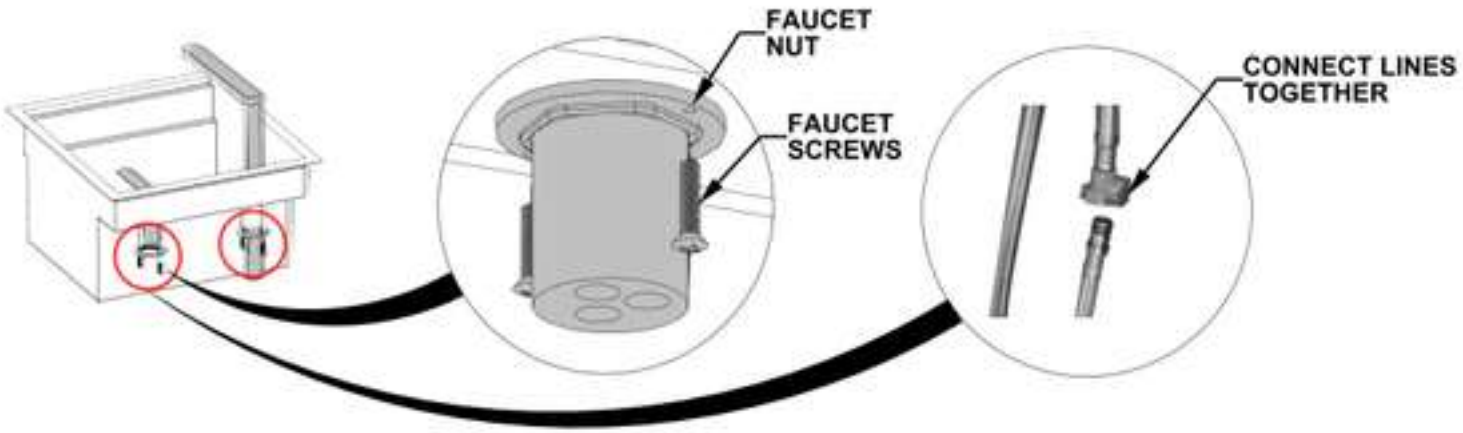

3. INSTALLING THE DRAIN FITTING

- ATTACH DRAIN FITTING TO SINK DRAIN.

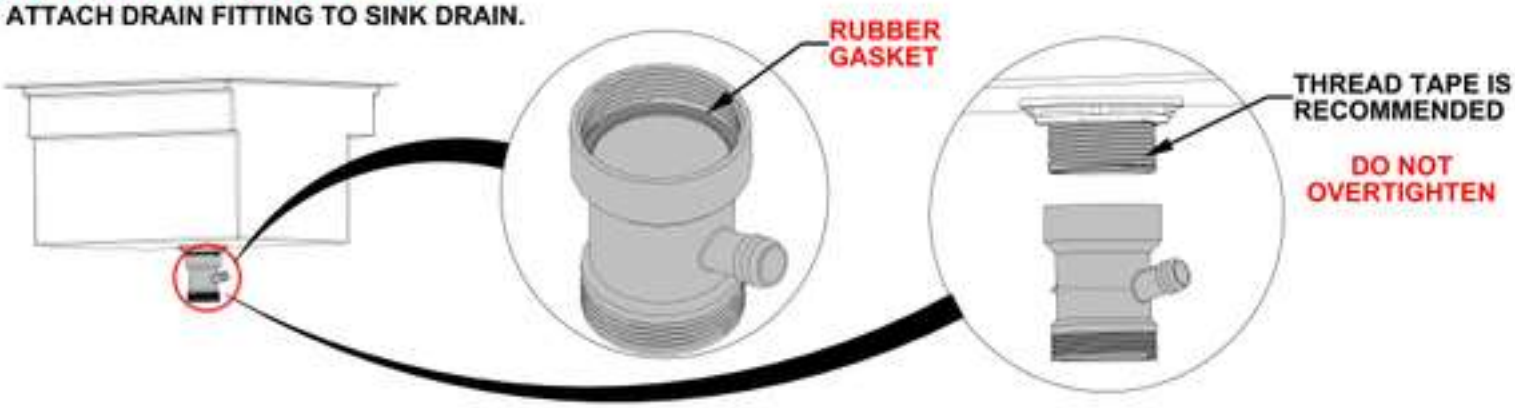

STEP 92B - SINK PRE-ASSEMBLY



A16 SINK ASSEMBLY - A4M03143
(x1) 15 1/8"x15 5/16"x16 7/8" (384x389x429)

4. INSTALLING THE OVERFLOW DRAIN

- MAKE SURE RUBBER GASKET IS INSTALLED IN OVERFLOW DRAIN.
- INSERT DRAIN SCREW TO HOLD IN PLACE.

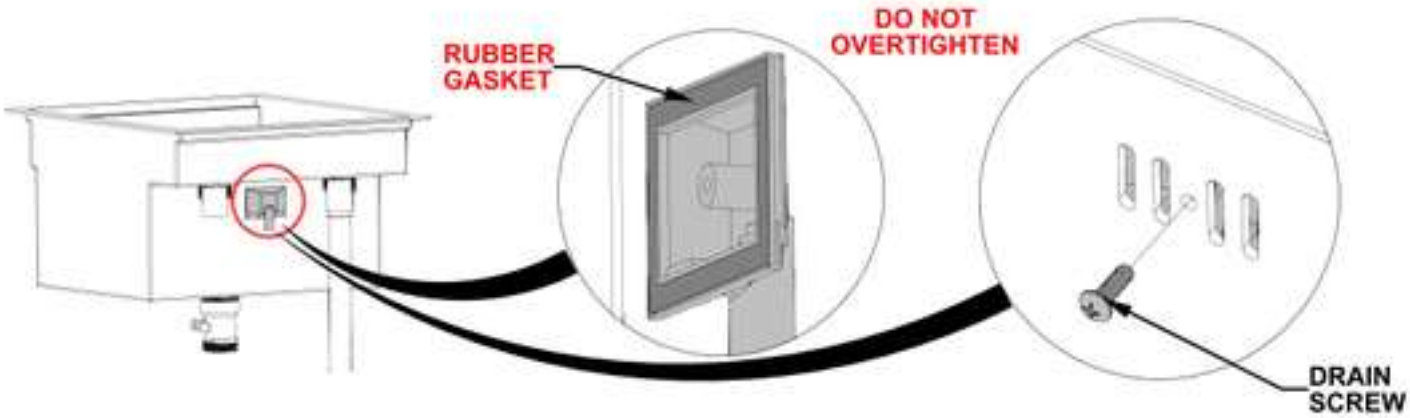

5. INSTALLING THE OVERFLOW DRAIN

- ATTACH OVERFLOW DRAIN BY CONNECTING EACH END AS SHOWN.

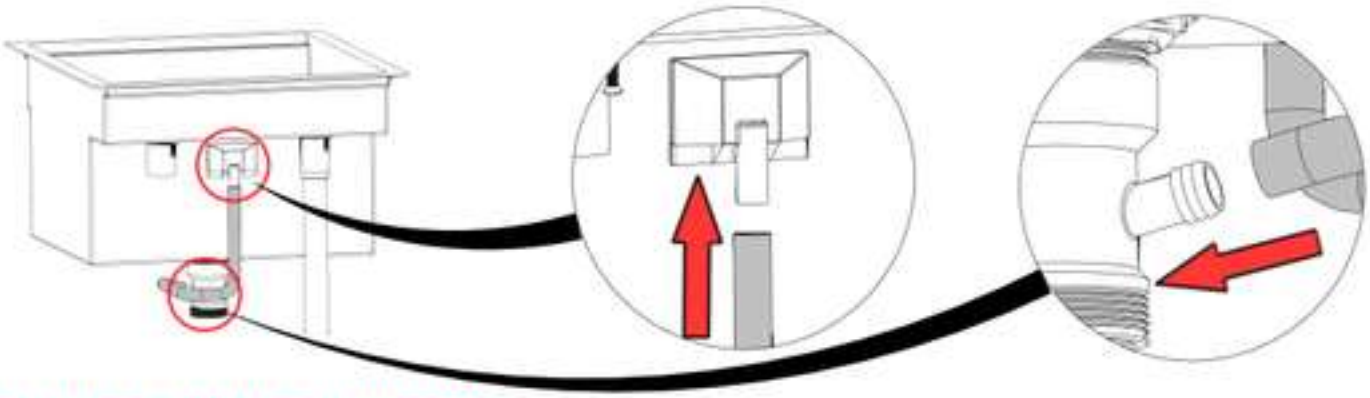

6. INSTALLING THE MAIN DRAIN AND TRAP

- ATTACH TRAP AND CORRUGATED DRAIN HOSE TO DRAIN FITTING.

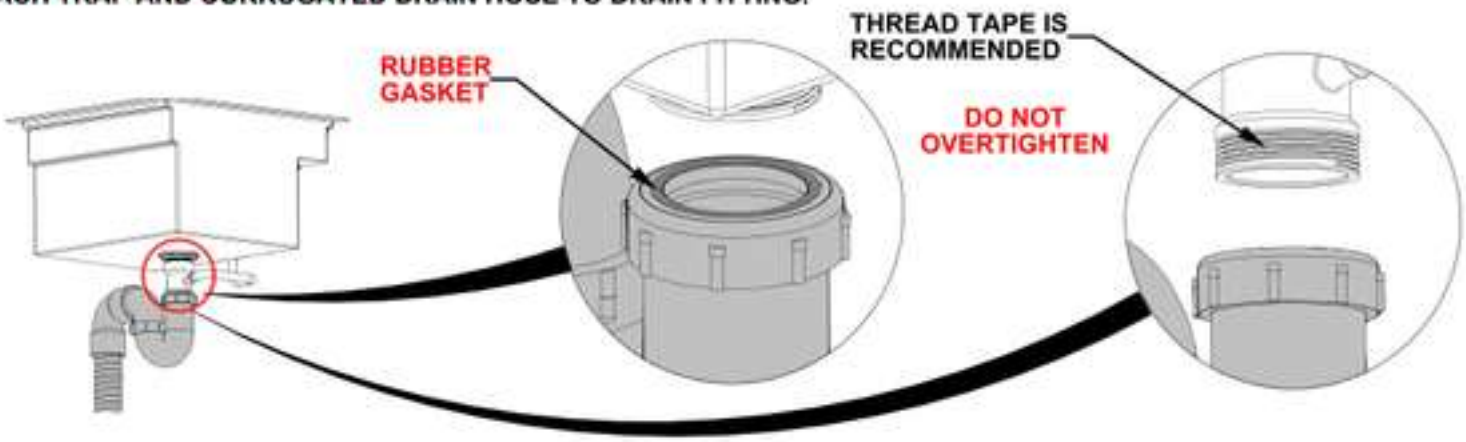

STEP 92C - SINK INSTALLATION



A16 (x1) SINK ASSEMBLY - A4M03143
15 1/8"x15 5/16"x16 7/8" (384x389x429)



A4M03151 (x1) GARDEN HOSE ADAPTER

- DRAIN STRAINER MUST BE USED WHEN DISCARDING FOOD INSIDE OF SINK.
- DO NOT LET SOLID MATERIAL ENTER SINK BASIN.

OPTIONS FOR WATER INLET SUPPLY HOOKUP:

- GARDEN HOSE ATTACHMENT USING PROVIDED ADAPTER
- WATER INLET SUPPLY LINE

OPTIONS FOR DRAIN DISCHARGE:

- BUCKET OR GREY WATER CONTAINER
- FRENCH DRAIN OR DRY BASIN
- INTEGRATED SEWER SYSTEM
- CHECK YOUR LOCAL REQUIRMENTS.

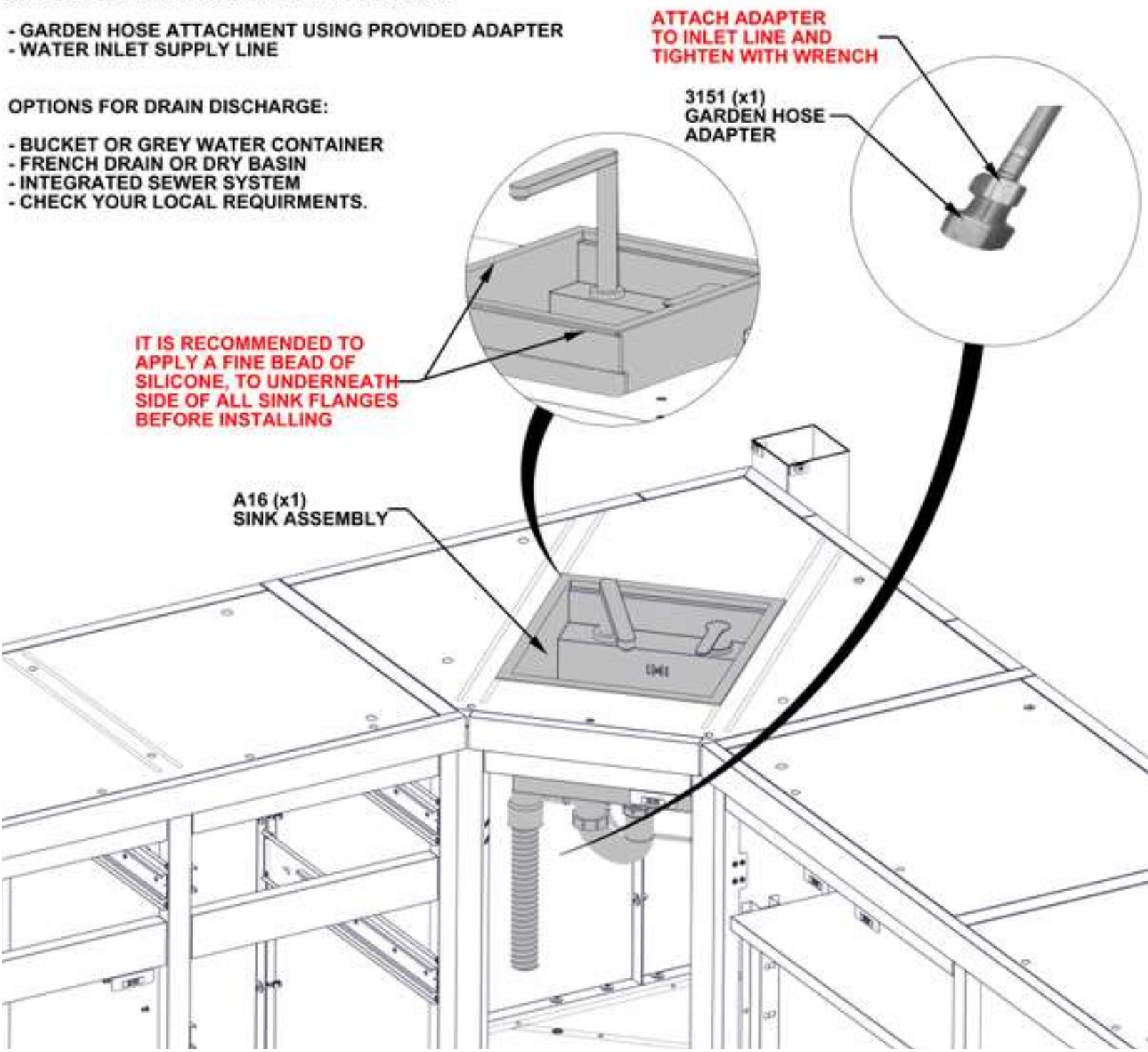

STEP 93A - SINK CABINET COUNTERTOP INSTALLATION

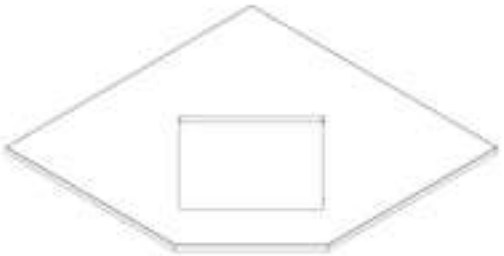

M2 SINK CABINET COUNTERTOP - A4M04483
(x1) 36"x36"x11/16" (18x915x915)

- ONLY KITCHEN CABINETS ARE SHOWN FOR DETAIL.
- IT IS RECOMMENDED TO HAVE AT LEAST TWO PEOPLE SET COUNTERTOP IN PLACE.
- SLIDE IN PLACE UNTIL COUNTERTOP IS TIGHT AGAINST POST AND SIDES ARE FLUSH WITH PANEL.
- WHEN SETTING COUNTERTOP IN PLACE, MAKE SURE YOUR FINGERS ARE CLEAR AND NOT UNDERNEATH.

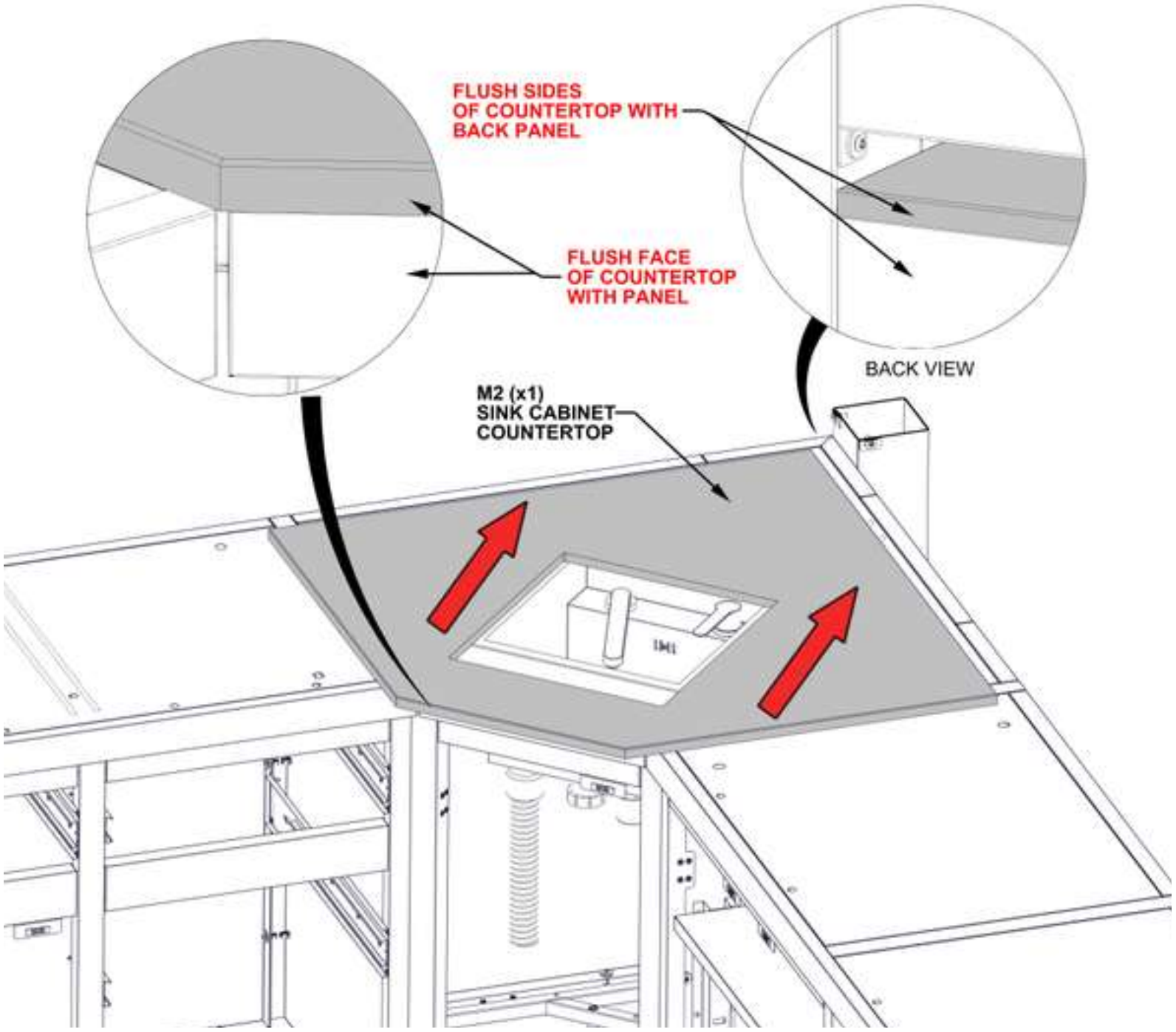

STEP 93B - SINK CABINET COUNTERTOP INSTALLATION

QTY	PART NUMBER	DESCRIPTION
4	H101292	TORX PAN HEAD 1/4-20x13/32"
4	H101053	STEEL WASHER 6x20
4	H101054	SEALANT WASHER

- ONLY KITCHEN CABINETS ARE SHOWN FOR DETAIL.
- MAKE SURE YOU ARE USING THE CORRECT HARDWARE FOR THIS STEP.
- ONCE COUNTERTOP IS IN PLACE, IT IS RECOMMENDED TO COVER WITH A PIECE OF CARDBOARD OR FOAM UNTIL ASSEMBLY IS FINISHED TO PREVENT DAMAGE.
- DO NOT USE COUNTERTOP SURFACE AS A WORK BENCH.

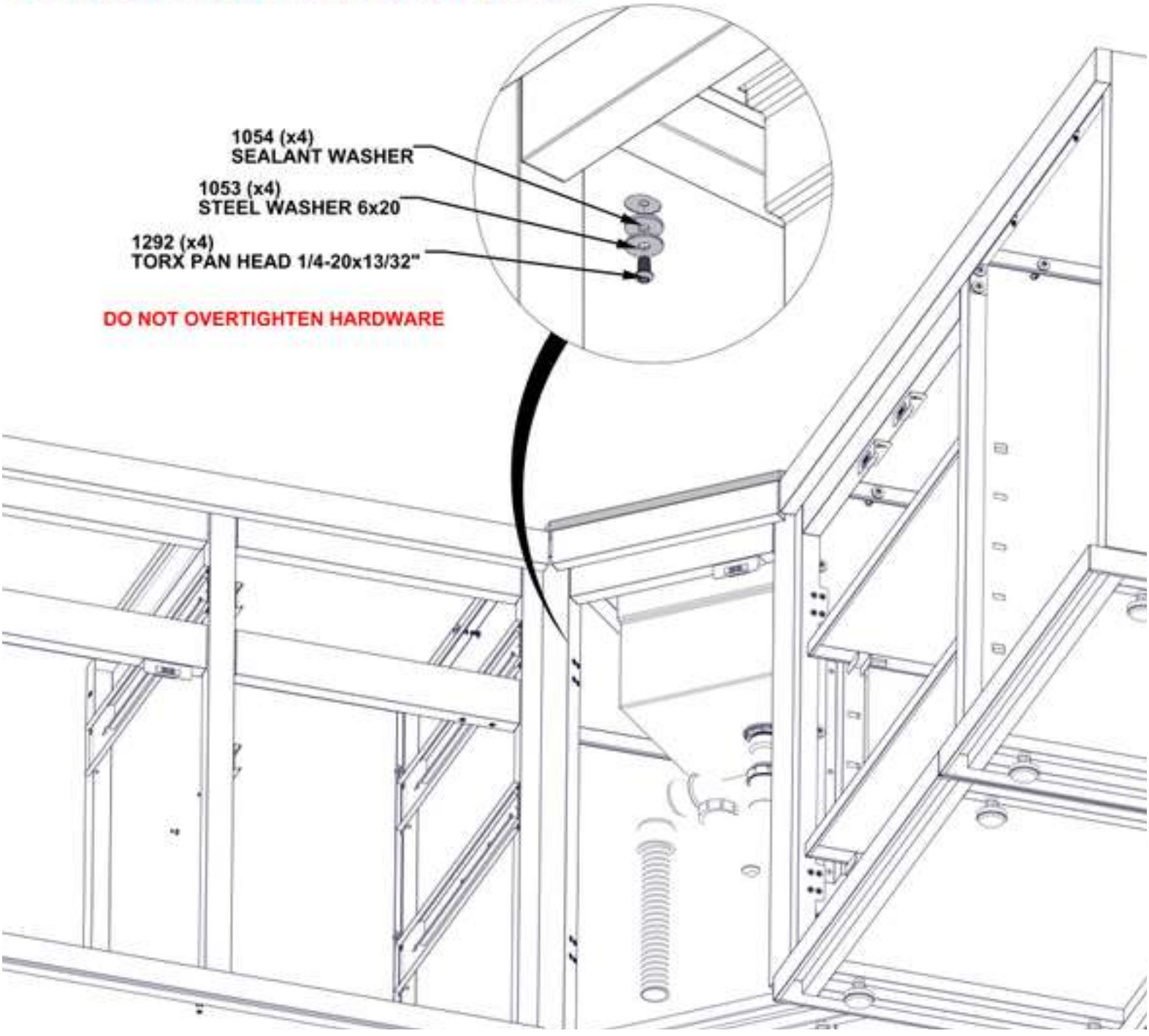

STEP 94A - STORAGE CABINET COUNTERTOP INSTALLATION



M3 (x1) LEFT CABINET COUNTERTOP - A4M04482
42 7/16"x24 3/4"x11/16" (18x628.0x1077.5)

- ONLY KITCHEN CABINETS ARE SHOWN FOR DETAIL.
- IT IS RECOMMENDED TO HAVE AT LEAST TWO PEOPLE SET COUNTERTOP IN PLACE.
- SLIDE IN PLACE UNTIL COUNTERTOP IS TIGHT AGAINST POST AND SIDES ARE FLUSH WITH PANEL.
- WHEN SETTING COUNTERTOP IN PLACE, MAKE SURE YOUR FINGERS ARE CLEAR AND NOT UNDERNEATH.

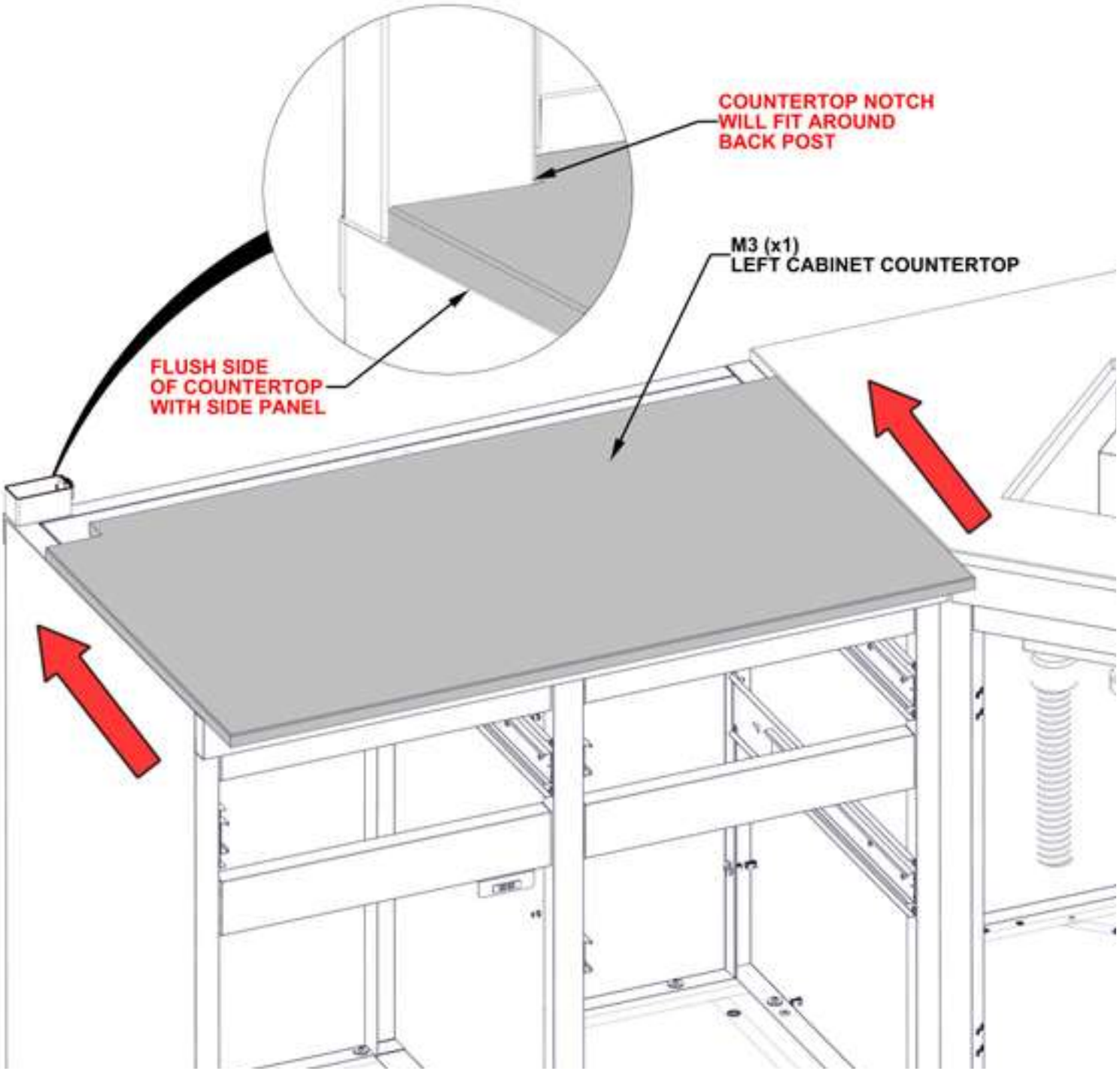

STEP 94B - STORAGE CABINET COUNTERTOP INSTALLATION

QTY	PART NUMBER	DESCRIPTION
4	H101292	TORX PAN HEAD 1/4-20x13/32"
4	H101053	STEEL WASHER 6x20
4	H101054	SEALANT WASHER

- ONLY KITCHEN CABINETS ARE SHOWN FOR DETAIL.
- MAKE SURE YOU ARE USING THE CORRECT HARDWARE FOR THIS STEP.
- ONCE COUNTERTOP IS IN PLACE, IT IS RECOMMENDED TO COVER WITH A PIECE OF CARDBOARD OR FOAM UNTIL ASSEMBLY IS FINISHED TO PREVENT DAMAGE.
- DO NOT USE COUNTERTOP SURFACE AS A WORK BENCH.

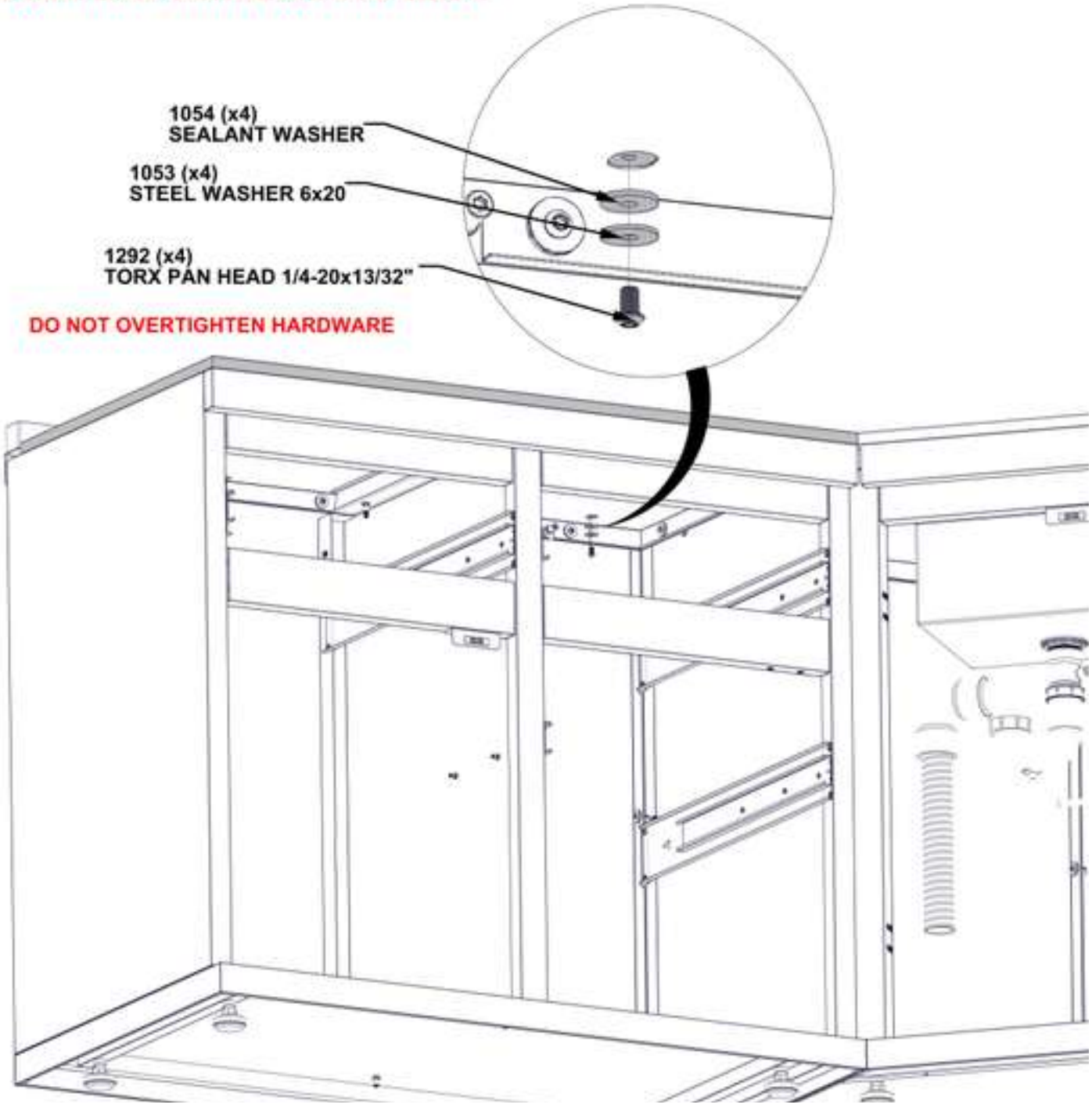

STEP 95A - CABINET COUNTERTOP INSTALLATION



M1 RIGHT CABINET COUNTERTOP - A4M04481
(x1) 60 1/16"x24 3/4"x11/16" (18x628.0x1525)

- ONLY KITCHEN CABINETS ARE SHOWN FOR DETAIL.
- IT IS RECOMMENDED TO HAVE AT LEAST TWO PEOPLE SET COUNTERTOP IN PLACE.
- SLIDE IN PLACE UNTIL COUNTERTOP IS TIGHT AGAINST POST AND SIDES ARE FLUSH WITH PANEL.
- WHEN SETTING COUNTERTOP IN PLACE, MAKE SURE YOUR FINGERS ARE CLEAR AND NOT UNDERNEATH.

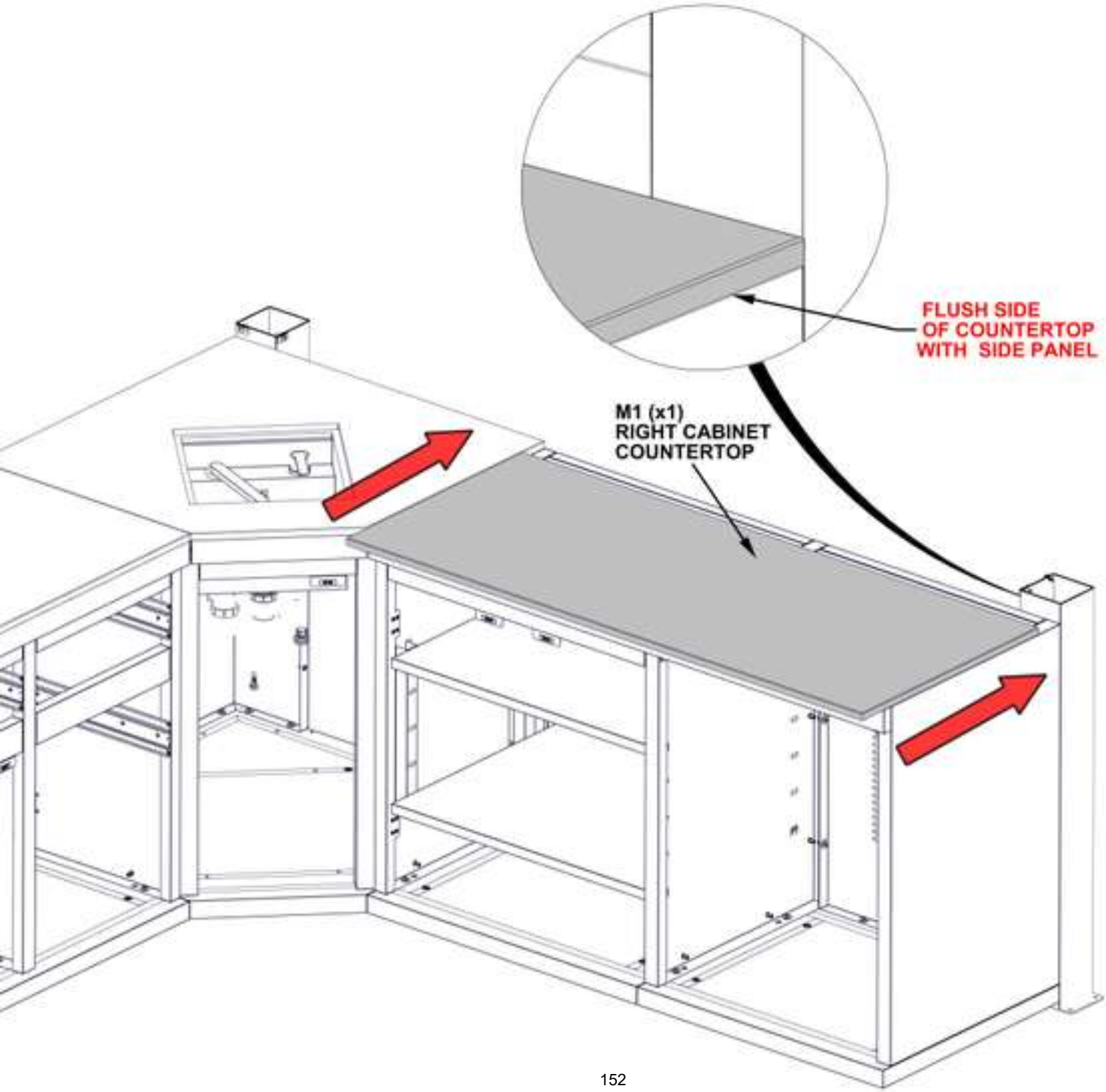

STEP 95B - CABINET COUNTERTOP INSTALLATION

QTY	PART NUMBER	DESCRIPTION
4	H101292	TORX PAN HEAD 1/4-20x13/32"
4	H101053	STEEL WASHER 6x20
4	H101054	SEALANT WASHER

- ONLY KITCHEN CABINETS ARE SHOWN FOR DETAIL.
- MAKE SURE YOU ARE USING THE CORRECT HARDWARE FOR THIS STEP.
- ONCE COUNTERTOP IS IN PLACE, IT IS RECOMMENDED TO COVER WITH A PIECE OF CARDBOARD OR FOAM UNTIL ASSEMBLY IS FINISHED TO PREVENT DAMAGE.
- DO NOT USE COUNTERTOP SURFACE AS A WORK BENCH.

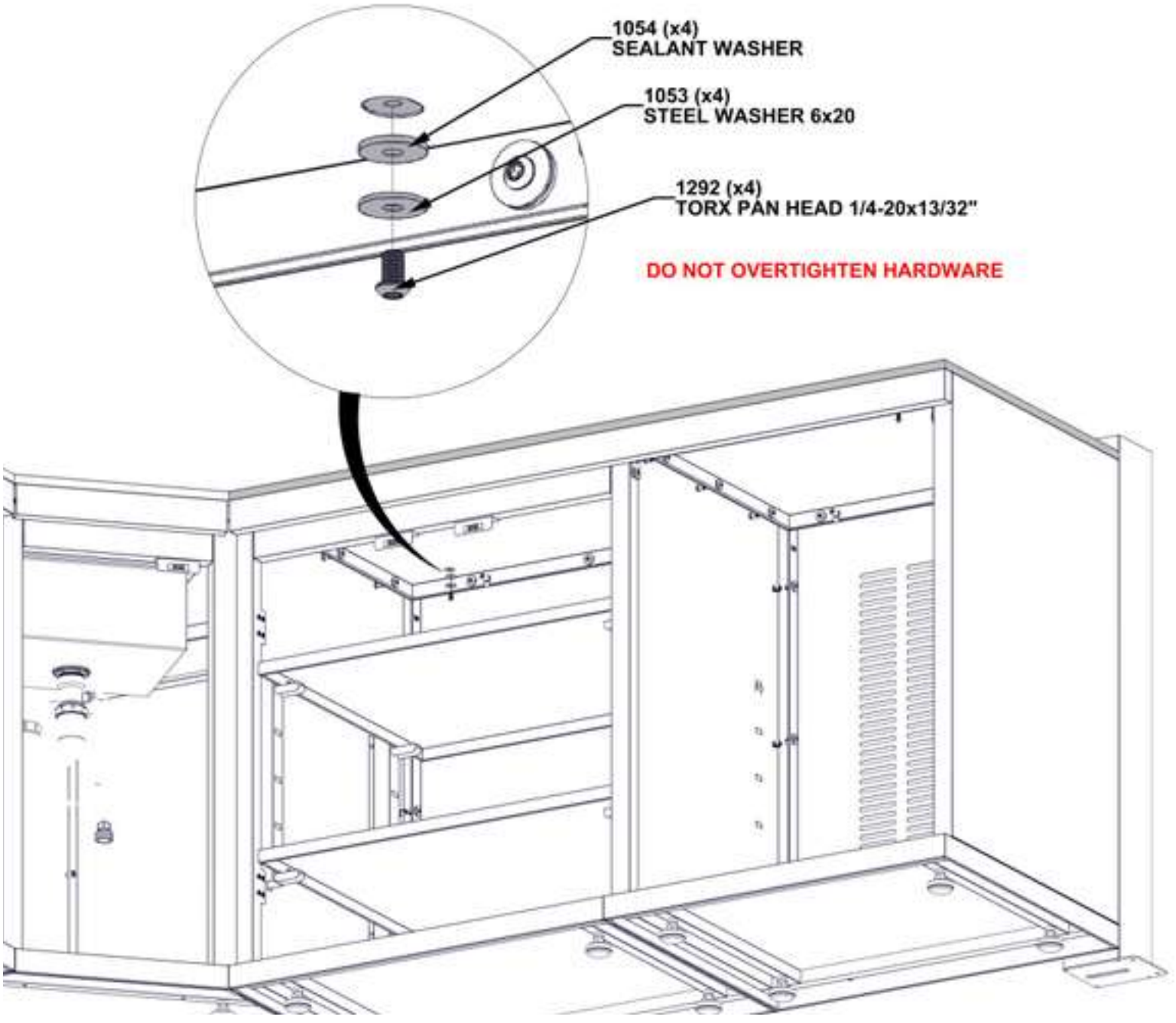

STEP 96 - SINK CABINET COUNTERTOP INSTALLATION



M5 SINK COVER COUNTERTOP - A4M05949
(x1) 11/16"x14 3/4"x16 5/16" (18x375x415)

- ONLY KITCHEN CABINETS ARE SHOWN FOR DETAIL.

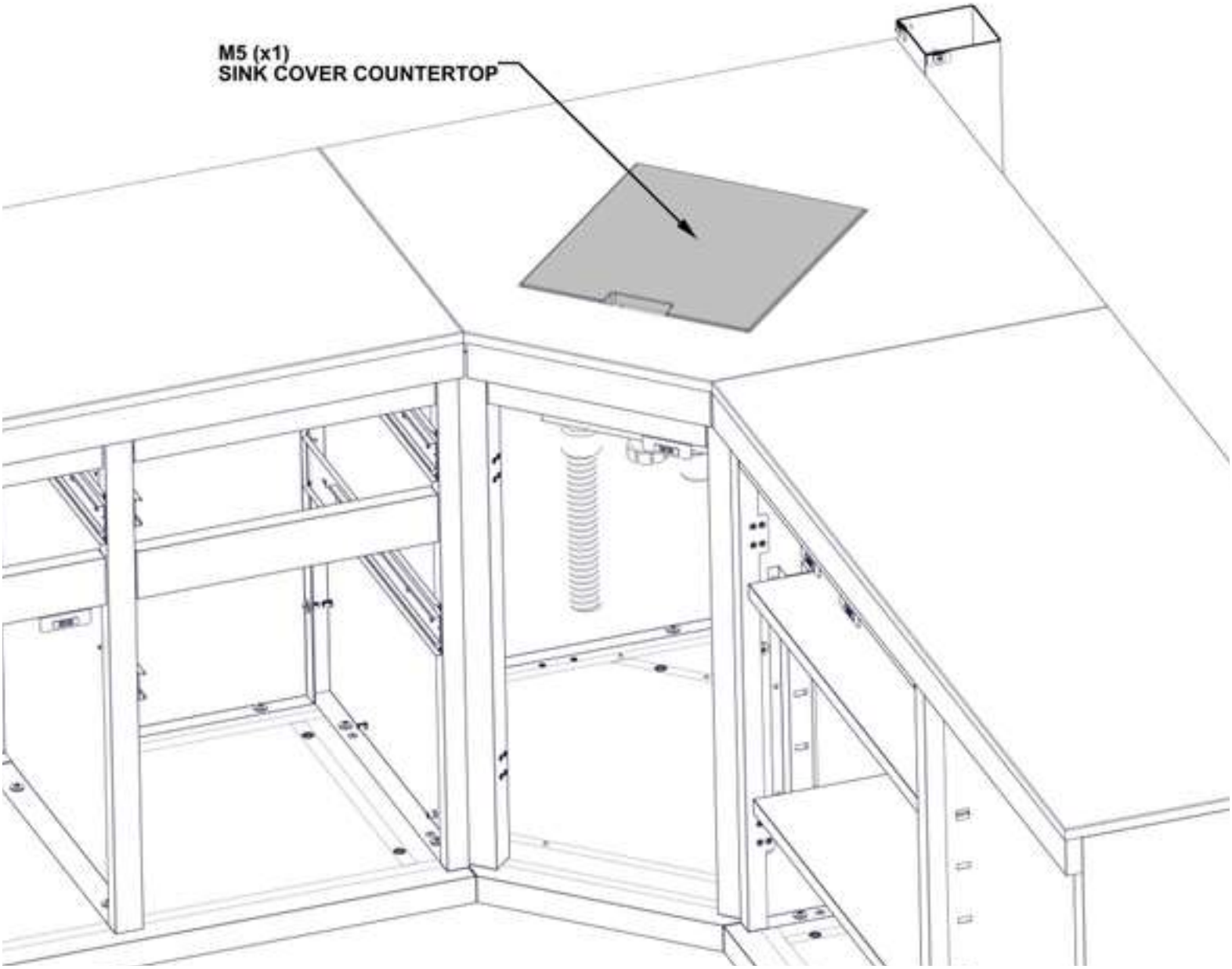

STEP 97A - KITCHEN TRASH CAN ASSEMBLY

QTY	PART NUMBER	DESCRIPTION
6	H101289	PAN HEAD SCREW 8-32x1/2" SS



H12 TRASH CAN BRACKET ASSEMBLY - A4M04470
(x1) 17 7/8"x18 7/16"x1 3/8" (35x467.8x454)



A11 TRIANGLE PANEL - A4M03086
(x2) 13/16"x13 3/4"x13 3/4" (20x350x350)

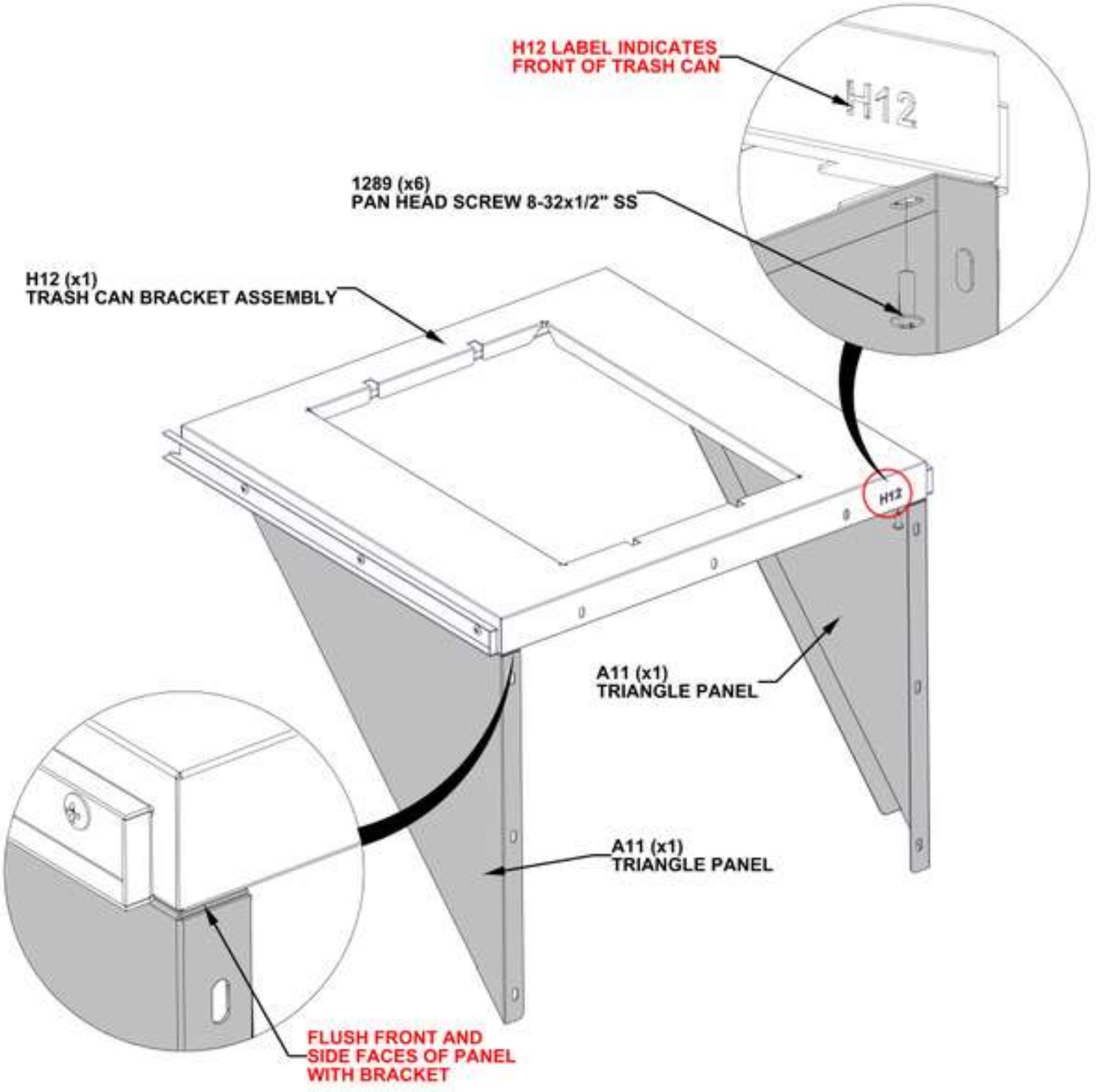

STEP 97B - KITCHEN TRASH CAN ASSEMBLY



QTY	PART NUMBER	DESCRIPTION
9	H101289	PAN HEAD SCREW 8-32x1/2" SS

D5 TRASH CAN DOOR PANEL ASSEMBLY - A4M04474
(x1) 23 1/4"x20 5/16"x15/16" (24x515.2x590.5)

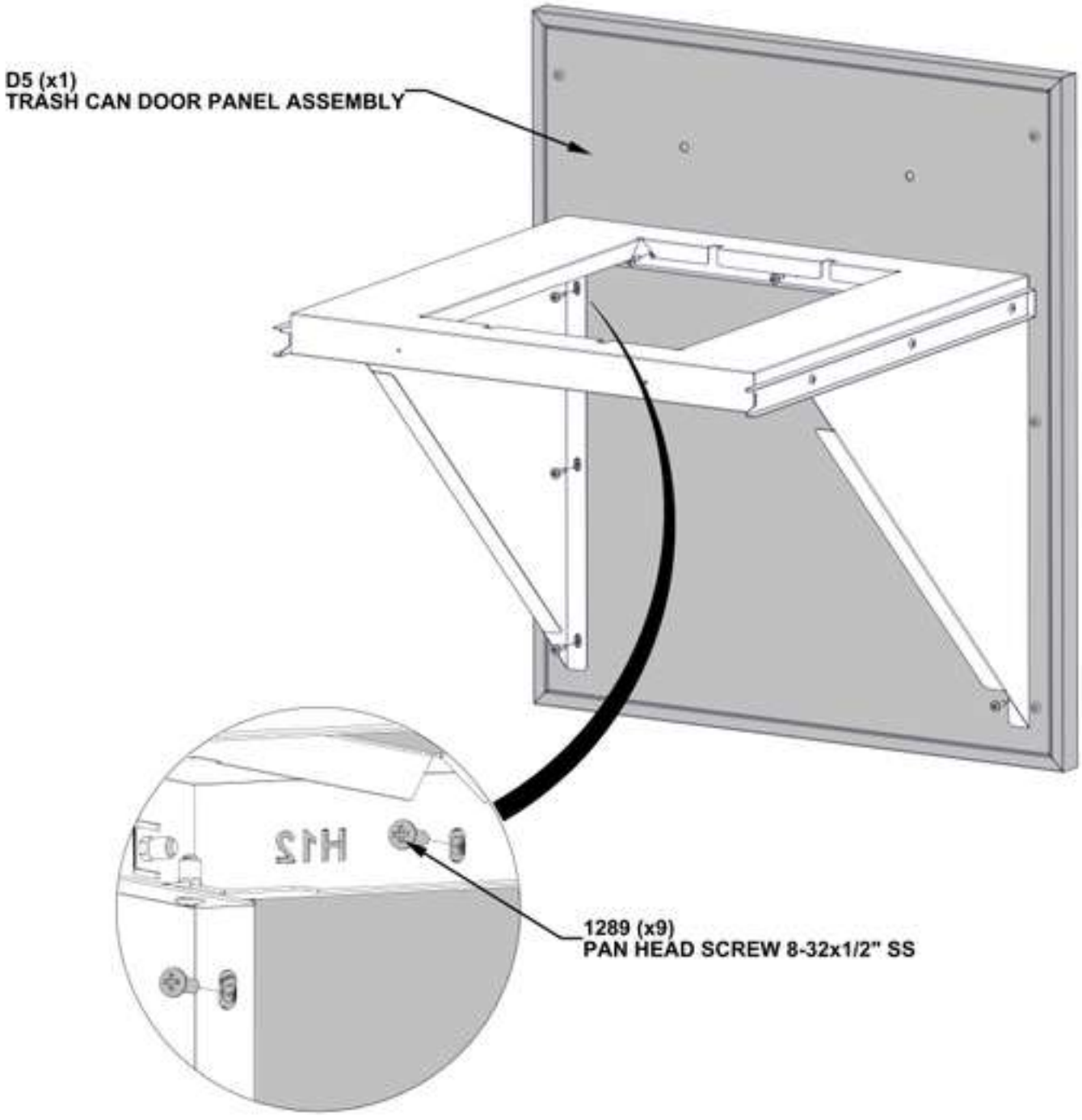

STEP 97C - KITCHEN TRASH CAN ASSEMBLY



H2 STAINLESS STEEL HANDLE - A4M03024
(x1) 5/8"x1 9/16"x11 13/16" (16x40x300)

QTY	PART NUMBER	DESCRIPTION
2	H101307	SHOULDER BOLT 8-32x30mm SS

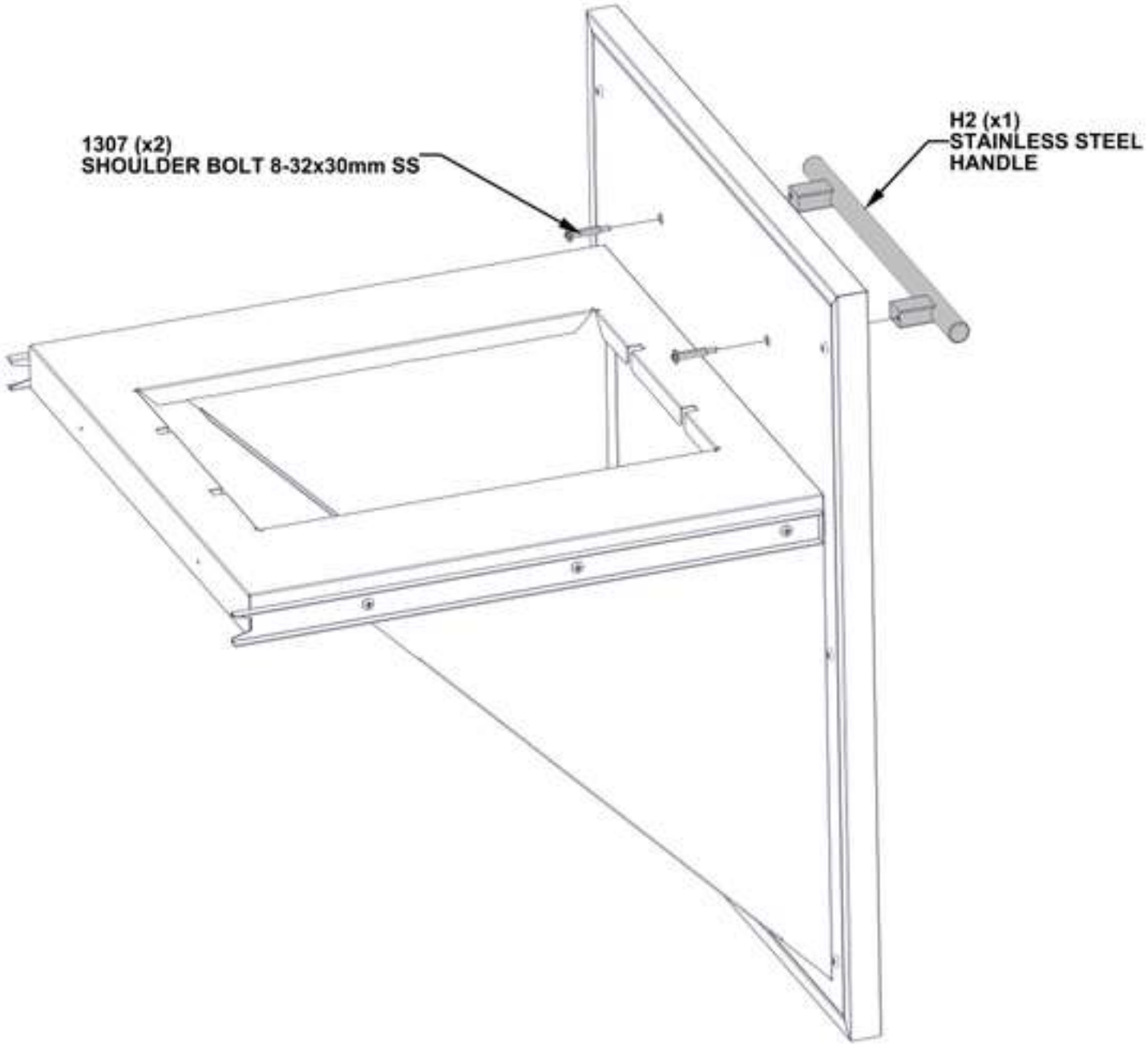

STEP 98 - KITCHEN TRASH CAN INSTALLATION



TRASH CAN ASSEMBLY
FROM STEP 97

- ONLY KITCHEN CABINETS ARE SHOWN FOR DETAIL.
- ATTACH TRASH CAN ASSEMBLY BY ALIGNING BOTH ENDS OF FACTORY ASSEMBLED DRAWER SLIDES WITH ONE ANOTHER.
- PRESS TOGETHER UNTIL TRASH CAN SLIDES CONNECT.

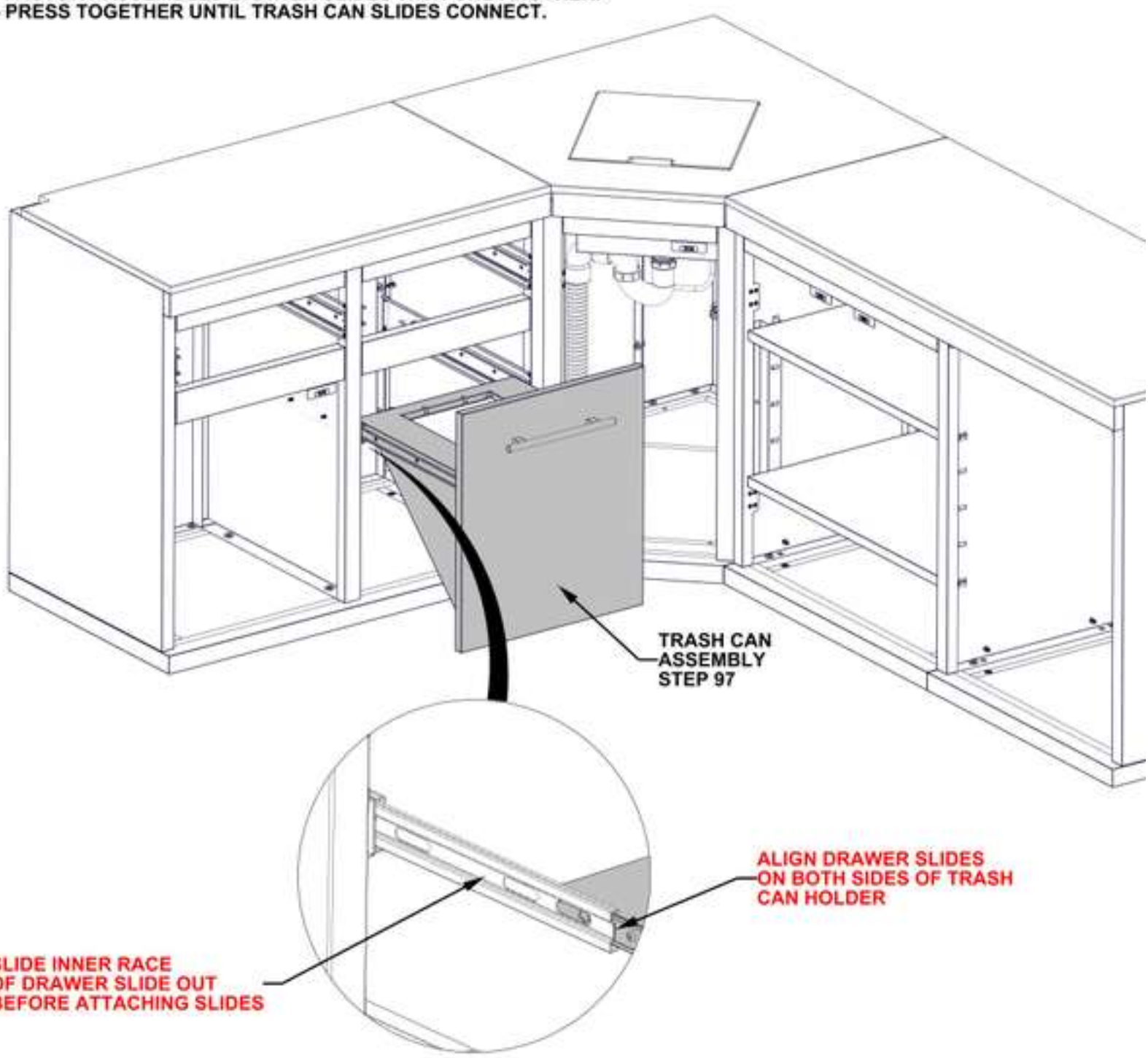

STEP 99A - KITCHEN DRAWER ASSEMBLY

QTY	PART NUMBER	DESCRIPTION
18	H101289	PAN HEAD SCREW 8-32x1/2" SS

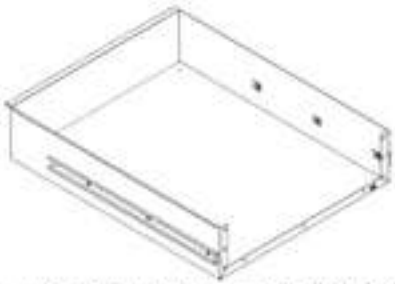

D6 LEFT CABINET DRAWER BODY ASSEMBLY - A4M04475
(x2) 18 3/8"x22 9/16"x4 3/4" (121x573.4x467.2)



D7 LEFT CABINET DRAWER PANEL ASSEMBLY - A4M04476
(x2) 20 5/16"x7 7/8"x15/16" (24x200x515.2)

- REPEAT THIS STEP TWICE

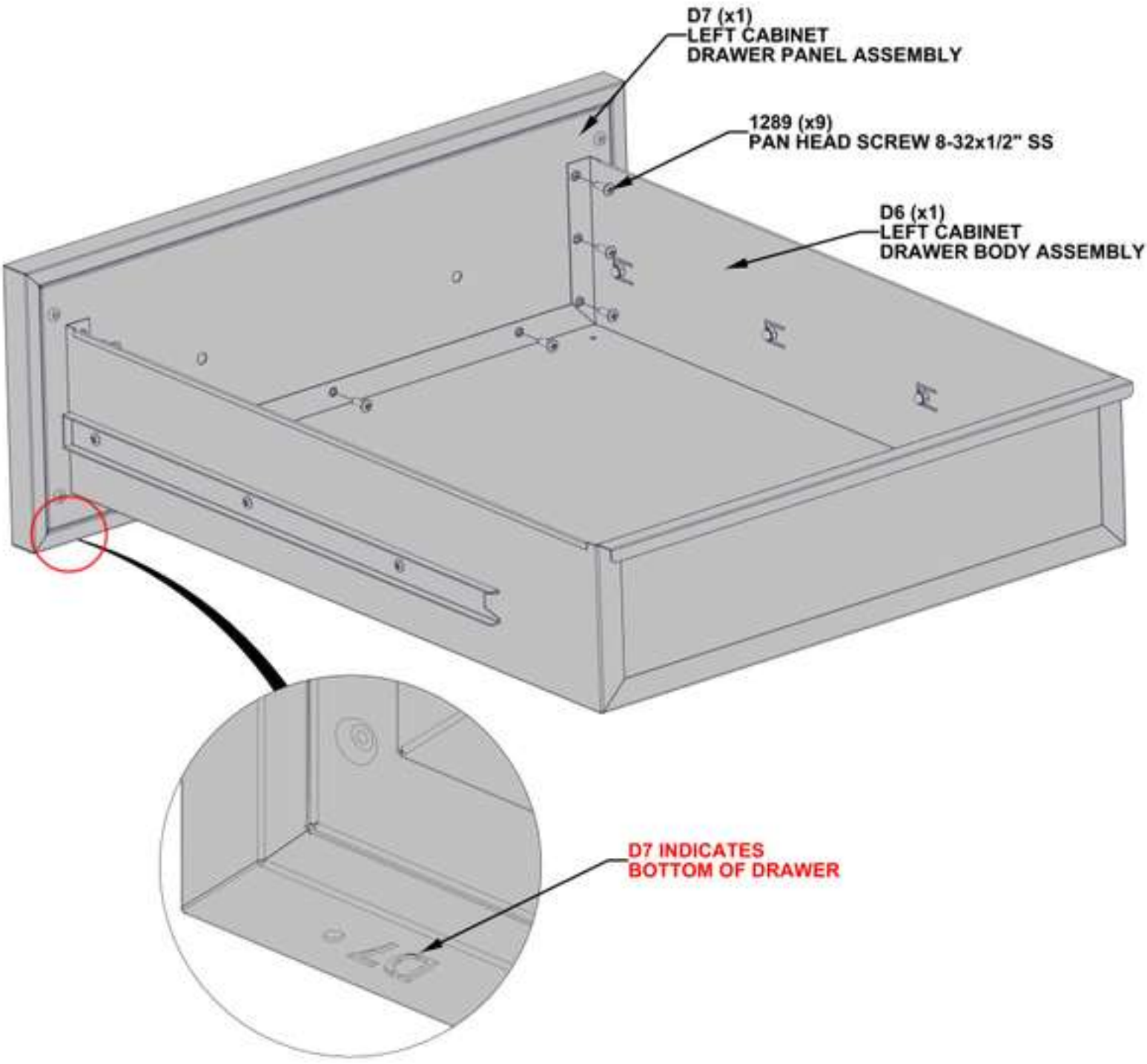

STEP 99B - KITCHEN DRAWER ASSEMBLY



H2 STAINLESS STEEL HANDLE - A4M03024
(x2) 5/8"x1 9/16"x11 13/16" (16x40x300)

QTY	PART NUMBER	DESCRIPTION
4	H101307	SHOULDER BOLT 8-32x30mm SS

- REPEAT THIS STEP TWICE

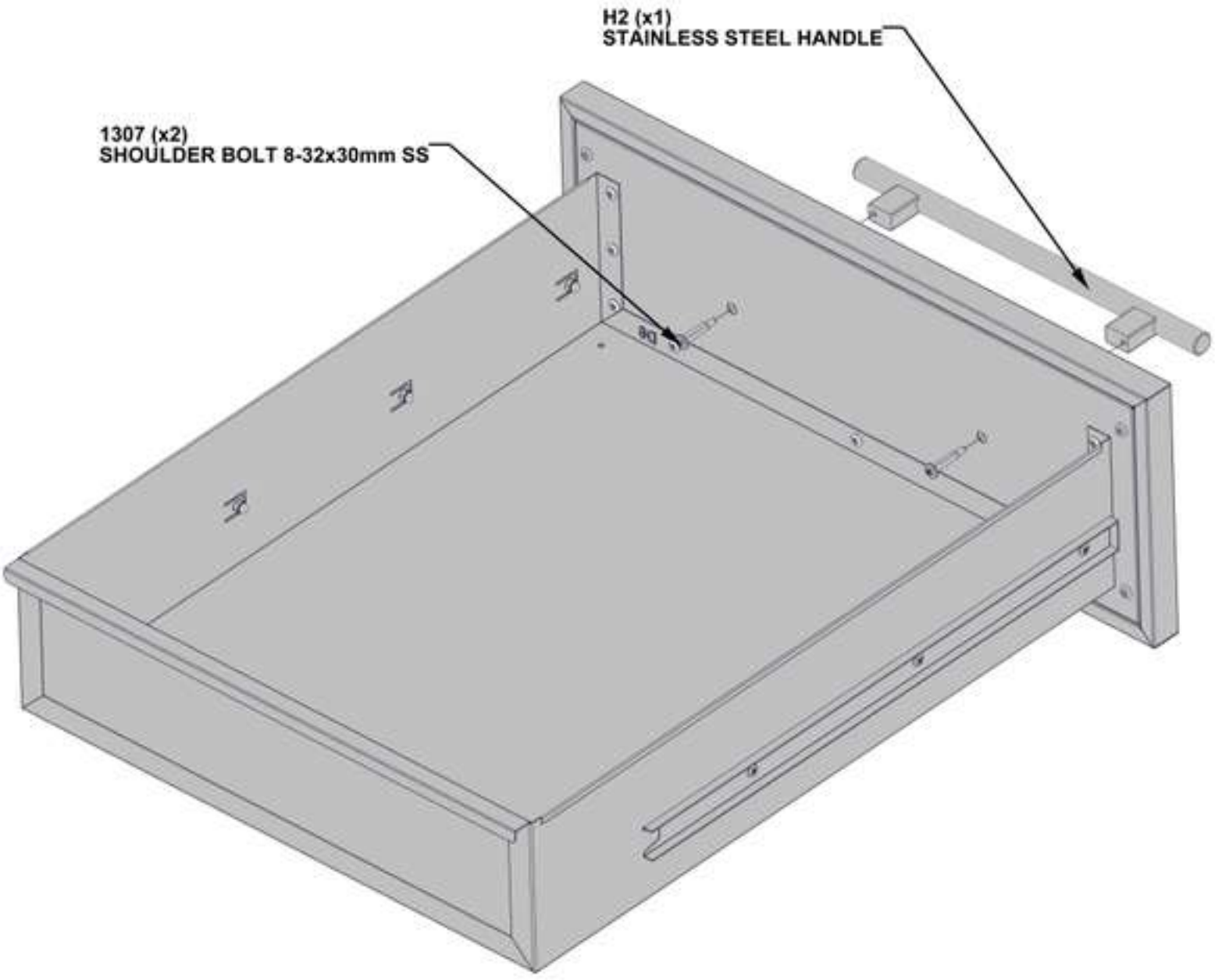

STEP 100A - KITCHEN DRAWER INSTALLATION



DRAWER ASSEMBLY
FROM STEP 99

- ONLY KITCHEN CABINETS ARE SHOWN FOR DETAIL.
- ATTACH DRAWER ASSEMBLY BY ALIGNING BOTH ENDS OF FACTORY ASSEMBLED DRAWER SLIDES WITH ONE ANOTHER.
- PRESS TOGETHER UNTIL DRAWER SLIDES CONNECT.

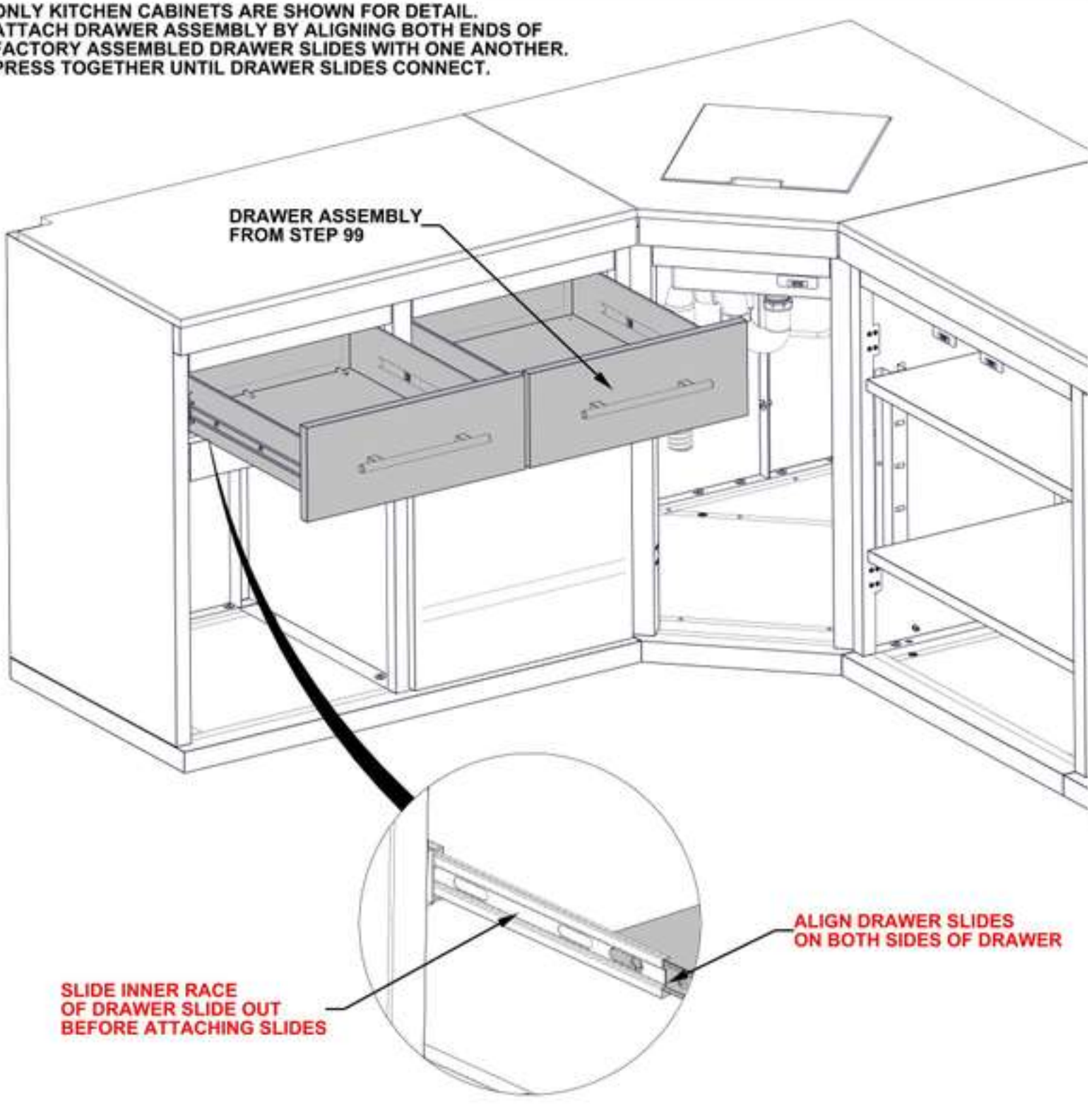

STEP 100B - KITCHEN SHELF ASSEMBLY



A5 SHELF BRACKET - A4M03141
(x4) 5/8"x7/8"x2 1/16" (16x22x53)

- ONLY KITCHEN CABINETS ARE SHOWN FOR DETAIL.
- ATTACH SHELF BRACKETS ON BOTH SIDES OF CABINET.

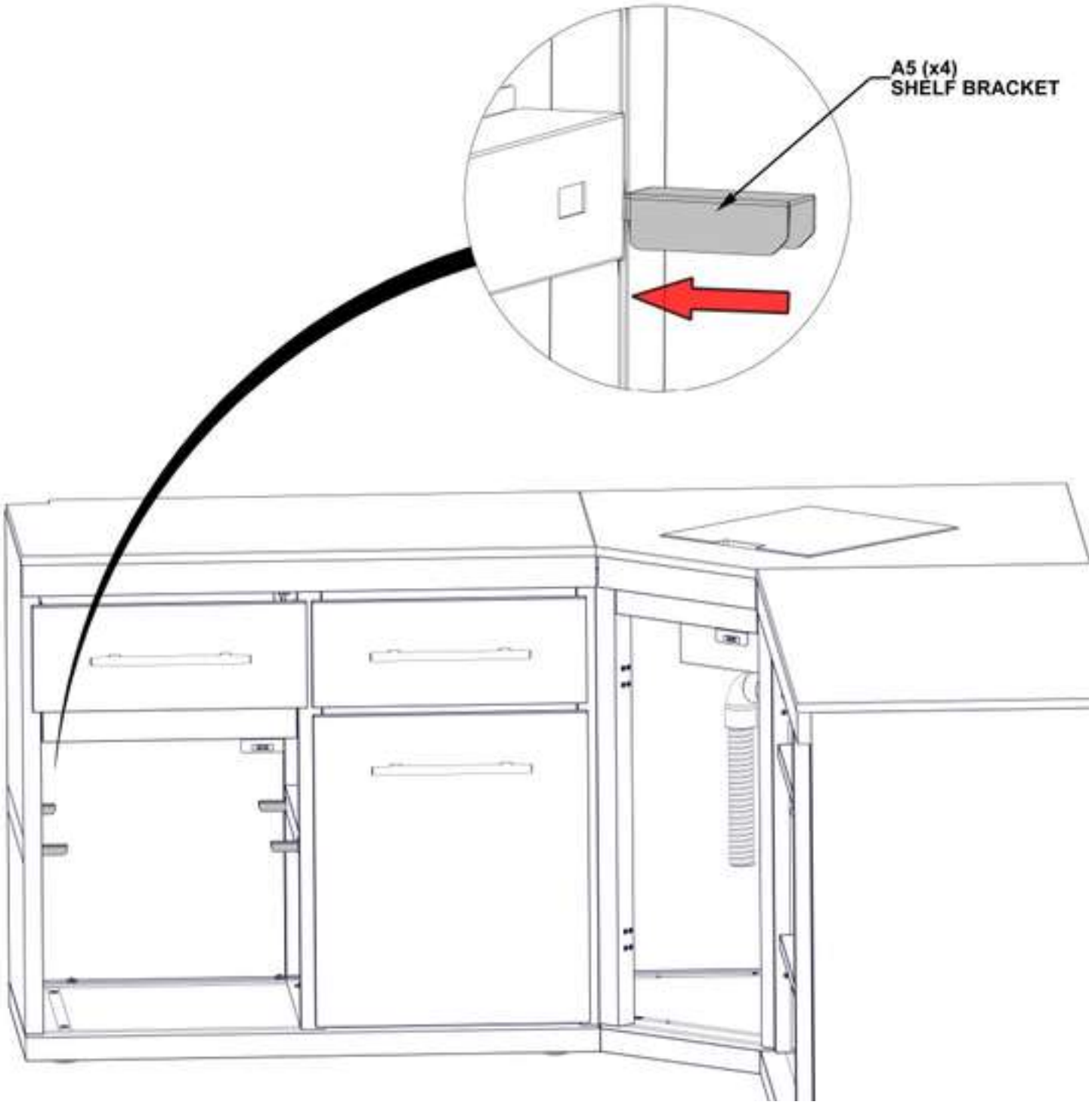

STEP 100C - KITCHEN SHELF ASSEMBLY



L5 SHELF - A4M05765
(x1) 23 5/8"x19"x1" (25x482x600)

- ONLY KITCHEN CABINETS ARE SHOWN FOR DETAIL.
- INSTALL CABINET SHELF IN CABINET.
- SHELF WILL REST ON SHELF BRACKETS FROM PREVIOUS STEP.

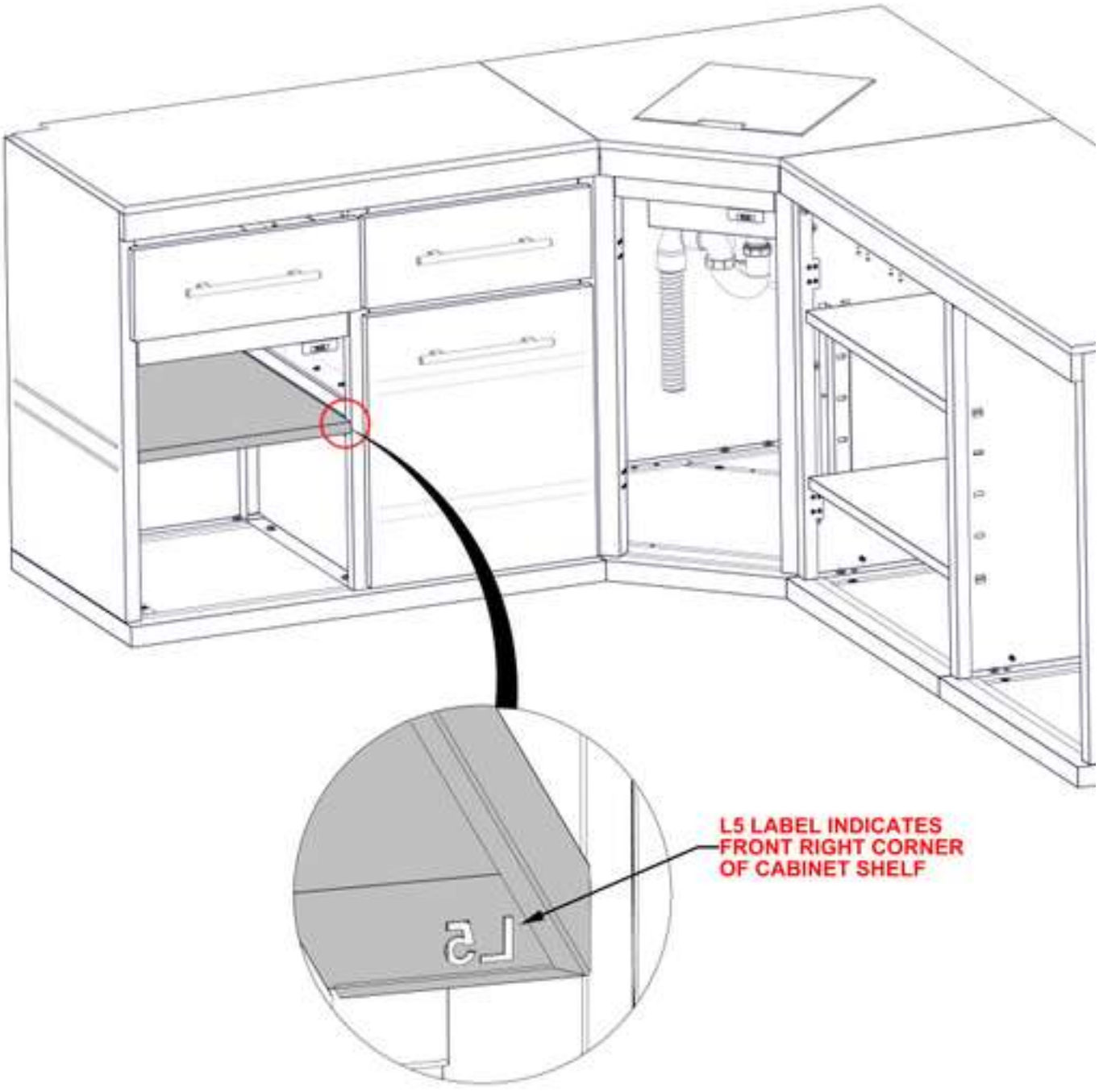

STEP 101A - DOOR ASSEMBLY

QTY	PART NUMBER	DESCRIPTION
16	H101185	PHILLIPS FLAT HEAD 8-32x.5 SCREW

D1 RIGHT CABINET DOOR ASSEMBLY L - A4M04454
(x1) 31 3/4"x15 9/16"x15/16" (24x396x807)

D3 SINK CABINET DOOR ASSEMBLY - A4M04462
(x1) 31 3/4"x15 11/16"x15/16" (24x398x807)

D2 RIGHT CABINET DOOR ASSEMBLY R - A4M04455
(x1) 31 3/4"x15 9/16"x15/16" (24x396x807)

D8 LEFT CABINET DOOR PANEL ASSEMBLY - A4M04497
(x1) 23 1/4"x20 5/16"x15/16" (24x515.2x590.5)

A4M03025 FULL OVERLAY HINGE
(x8)

- INSTALL CABINET HINGES TO THE FOUR DOORS.

DO NOT OVERTIGHTEN HARDWARE

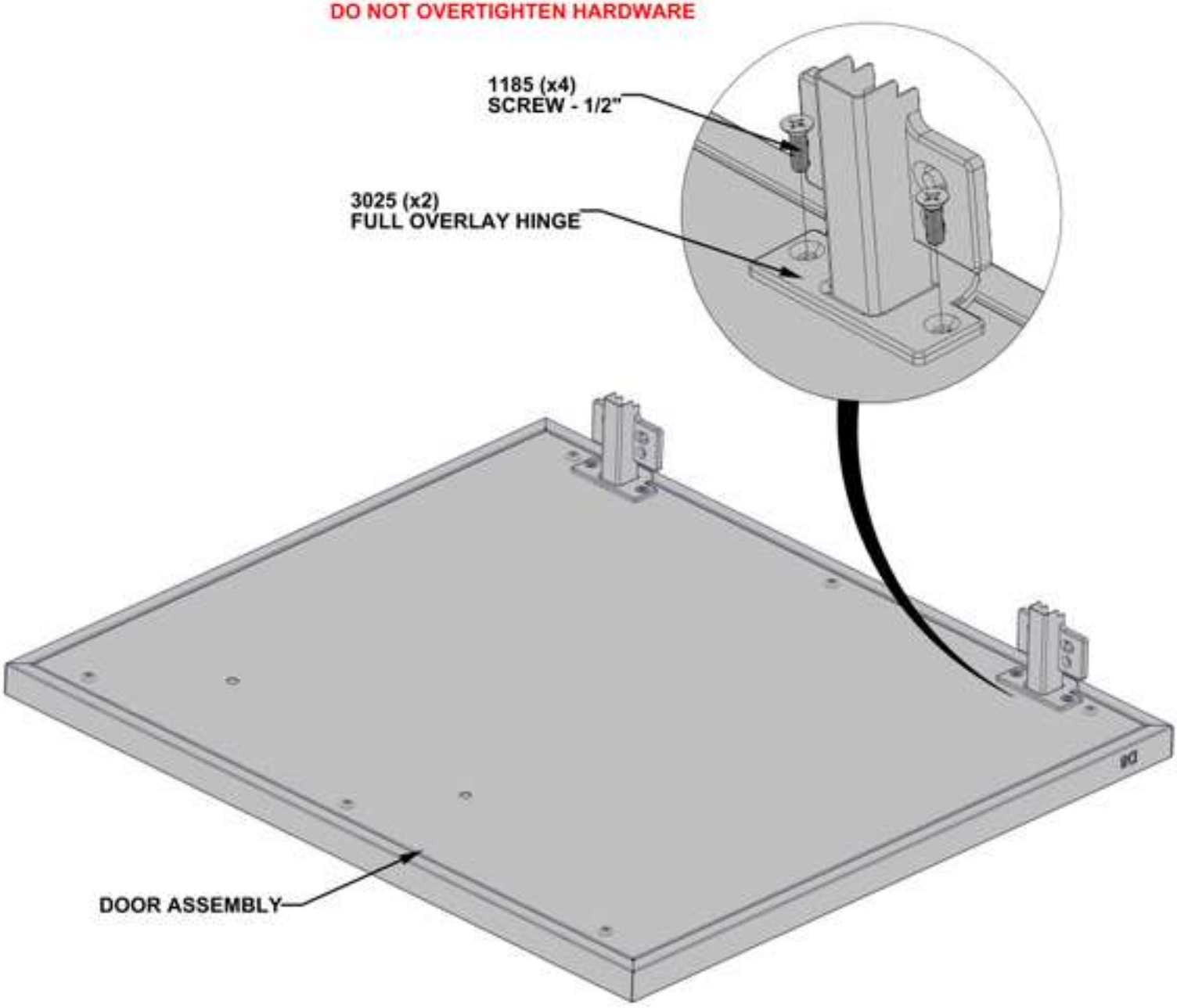

STEP 101B - DOOR ASSEMBLY



H2 STAINLESS STEEL HANDLE - A4M03024
(x4) 5/8"x1 9/16"x11 13/16" (16x40x300)

QTY	PART NUMBER	DESCRIPTION
8	H101307	SHOULDER BOLT 8-32x30mm SS

- INSTALL CABINET HANDLES ON THE FOUR DOORS FROM THE PREVIOUS STEP.

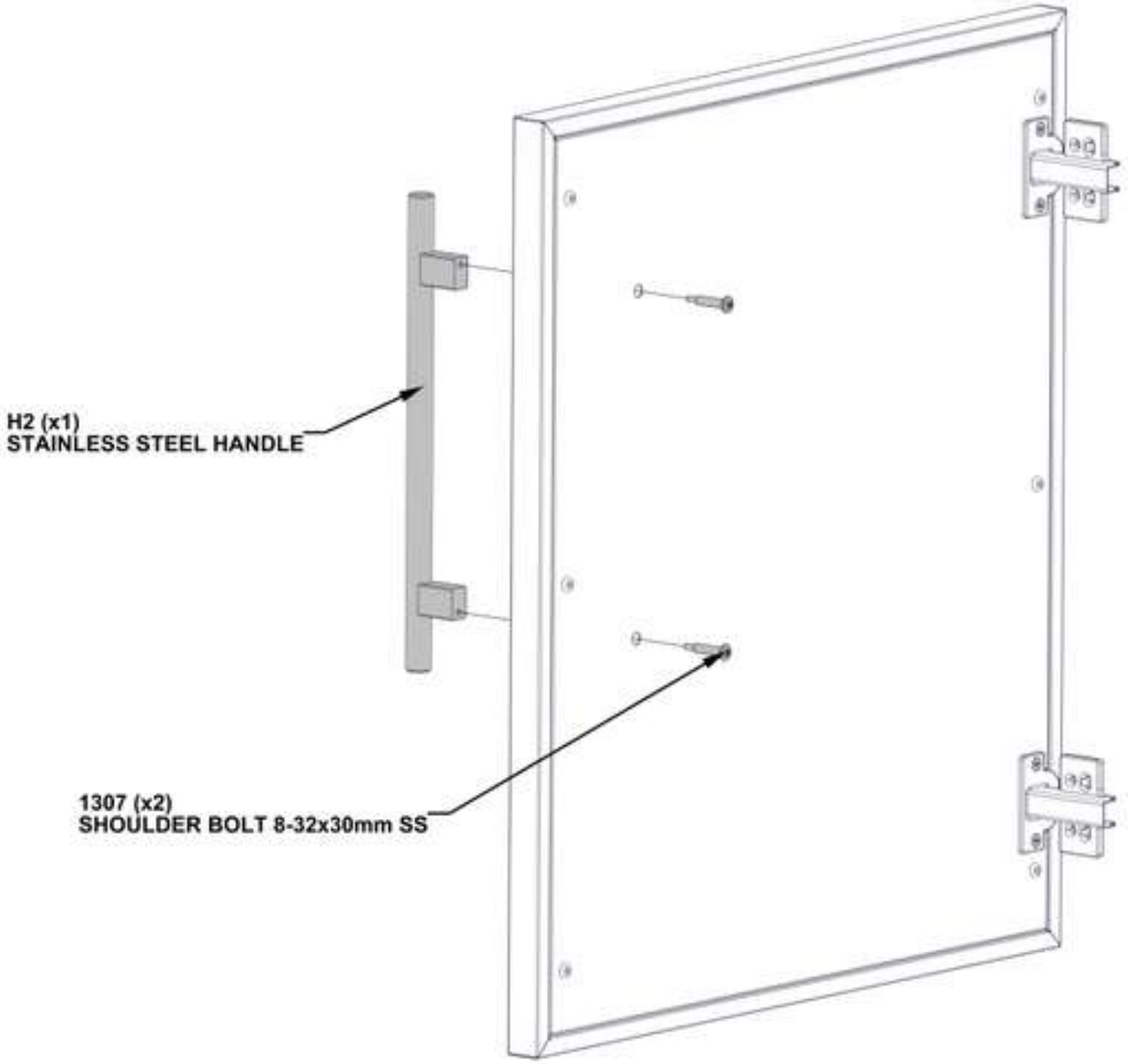

STEP 102 - CABINET DOOR ATTACHMENT



D8 LEFT CABINET DOOR PANEL ASSEMBLY - A4M04497
(x1) 23 1/4"x20 5/16"x15/16" (24x515.2x590.5)

QTY	PART NUMBER	DESCRIPTION
8	H101185	PHILLIPS FLAT HEAD 8-32x.5 SCREW

- ONLY KITCHEN CABINETS ARE SHOWN FOR DETAIL.
- FOR THIS STEP IT IS HELPFUL TO HAVE AN ADDITIONAL PERSON HELP HOLD DOOR IN PLACE.
- WITH CABINET HINGES ATTACHED TO DOOR, ALIGN HOLES IN HINGE BRACKET WITH THREADED INSERTS IN SIDE OF CABINET PANEL.

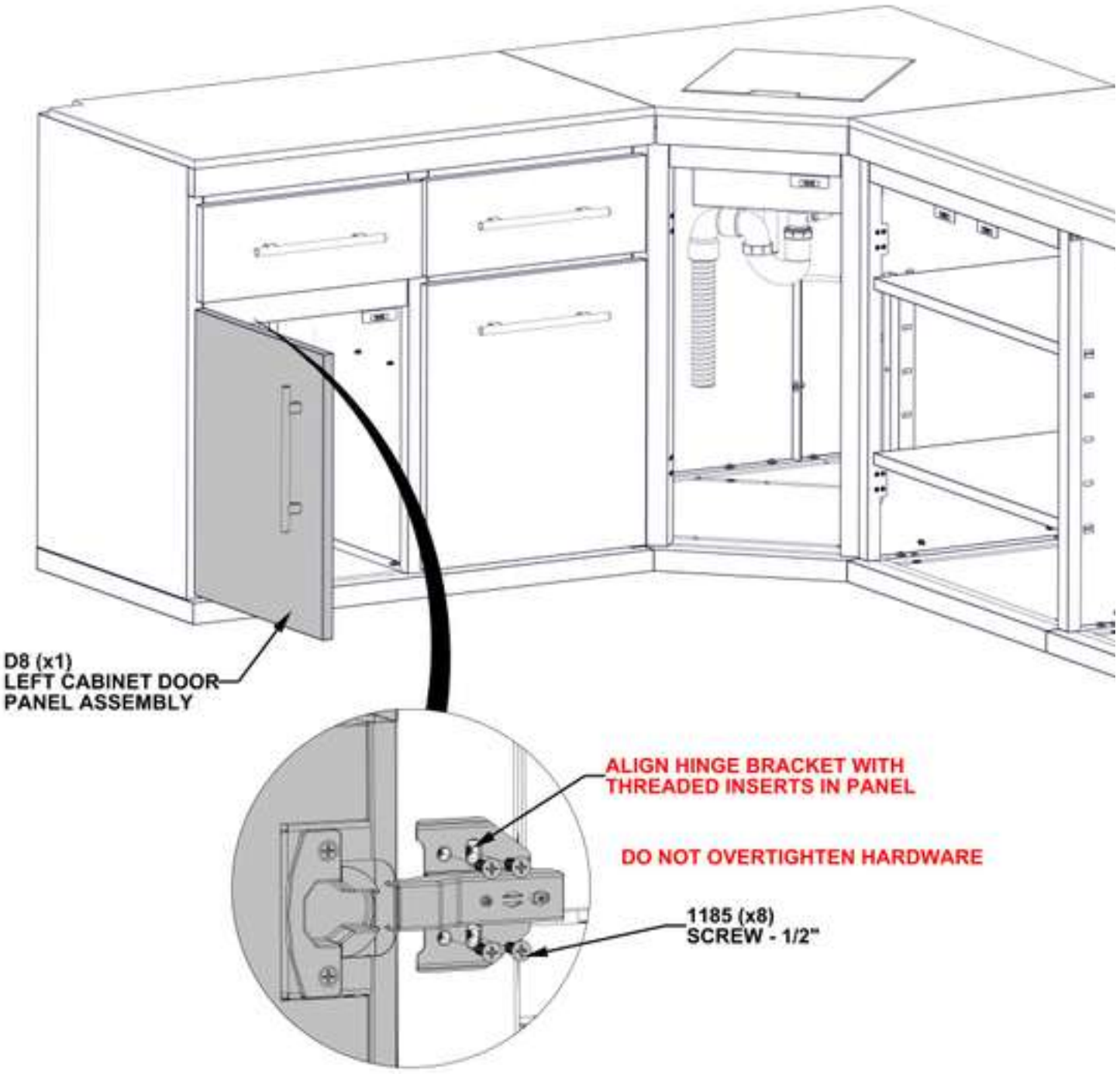

STEP 103 - CABINET DOOR ATTACHMENT



D3 SINK CABINET DOOR ASSEMBLY - A4M04462
(x1) 31 3/4"x15 11/16"x15/16" (24x398x807)

QTY	PART NUMBER	DESCRIPTION
8	H101185	PHILLIPS FLAT HEAD 8-32x.5 SCREW

- ONLY KITCHEN CABINETS ARE SHOWN FOR DETAIL.
- FOR THIS STEP IT IS HELPFUL TO HAVE AN ADDITIONAL PERSON HELP HOLD DOOR IN PLACE.
- WITH CABINET HINGES ATTACHED TO DOOR, ALIGN HOLES IN HINGE BRACKET WITH THREADED INSERTS IN SIDE OF CABINET PANEL.

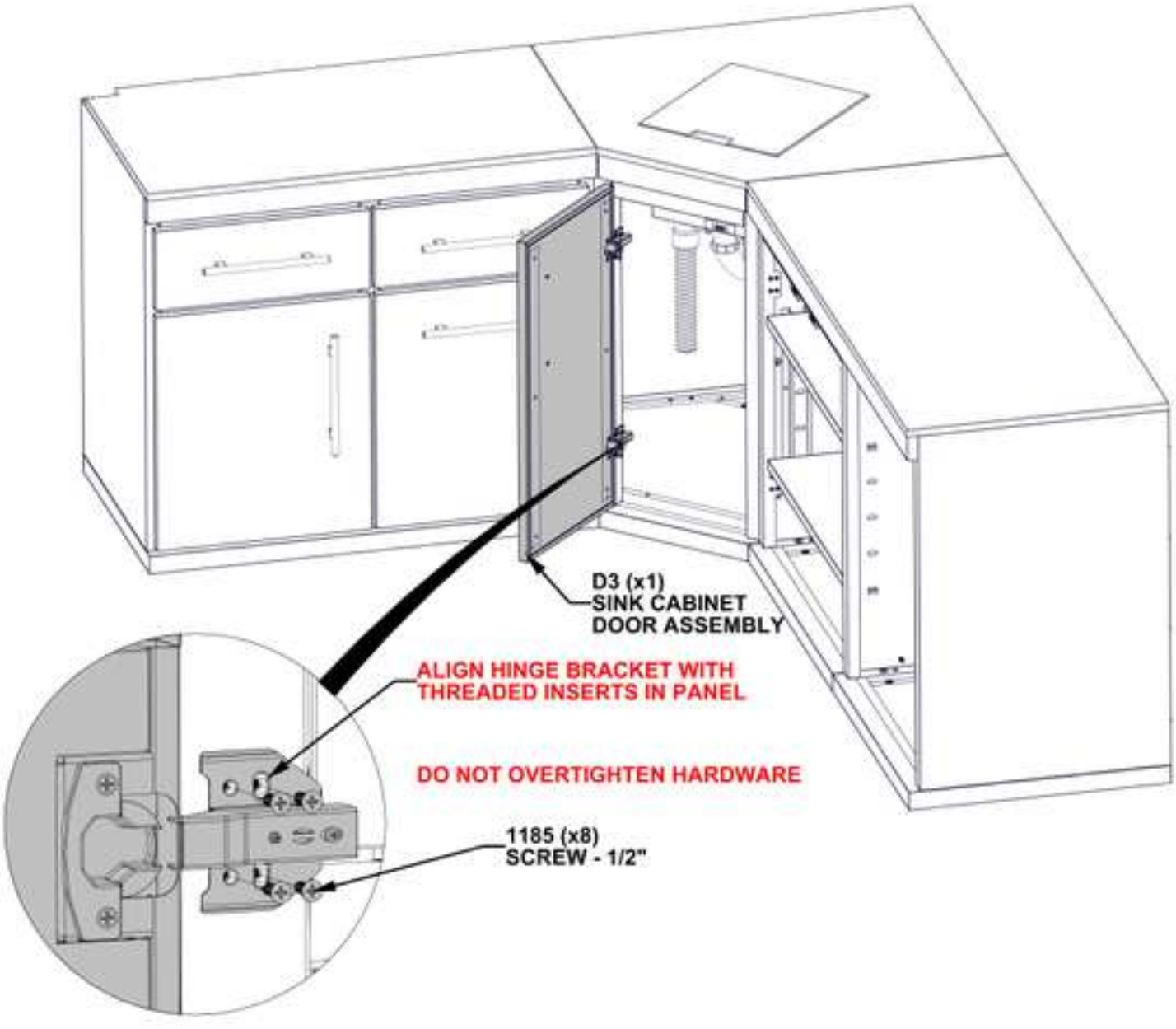

STEP 104 - CABINET DOOR ATTACHMENT



D1 RIGHT CABINET DOOR ASSEMBLY L - A4M04454
(x1) 31 3/4"x15 9/16"x15/16" (24x396x807)

QTY	PART NUMBER	DESCRIPTION
8	H101185	PHILLIPS FLAT HEAD 8-32x.5 SCREW

- ONLY KITCHEN CABINETS ARE SHOWN FOR DETAIL.
- FOR THIS STEP IT IS HELPFUL TO HAVE AN ADDITIONAL PERSON HELP HOLD DOOR IN PLACE.
- WITH CABINET HINGES ATTACHED TO DOOR, ALIGN HOLES IN HINGE BRACKET WITH THREADED INSERTS IN SIDE OF CABINET PANEL.

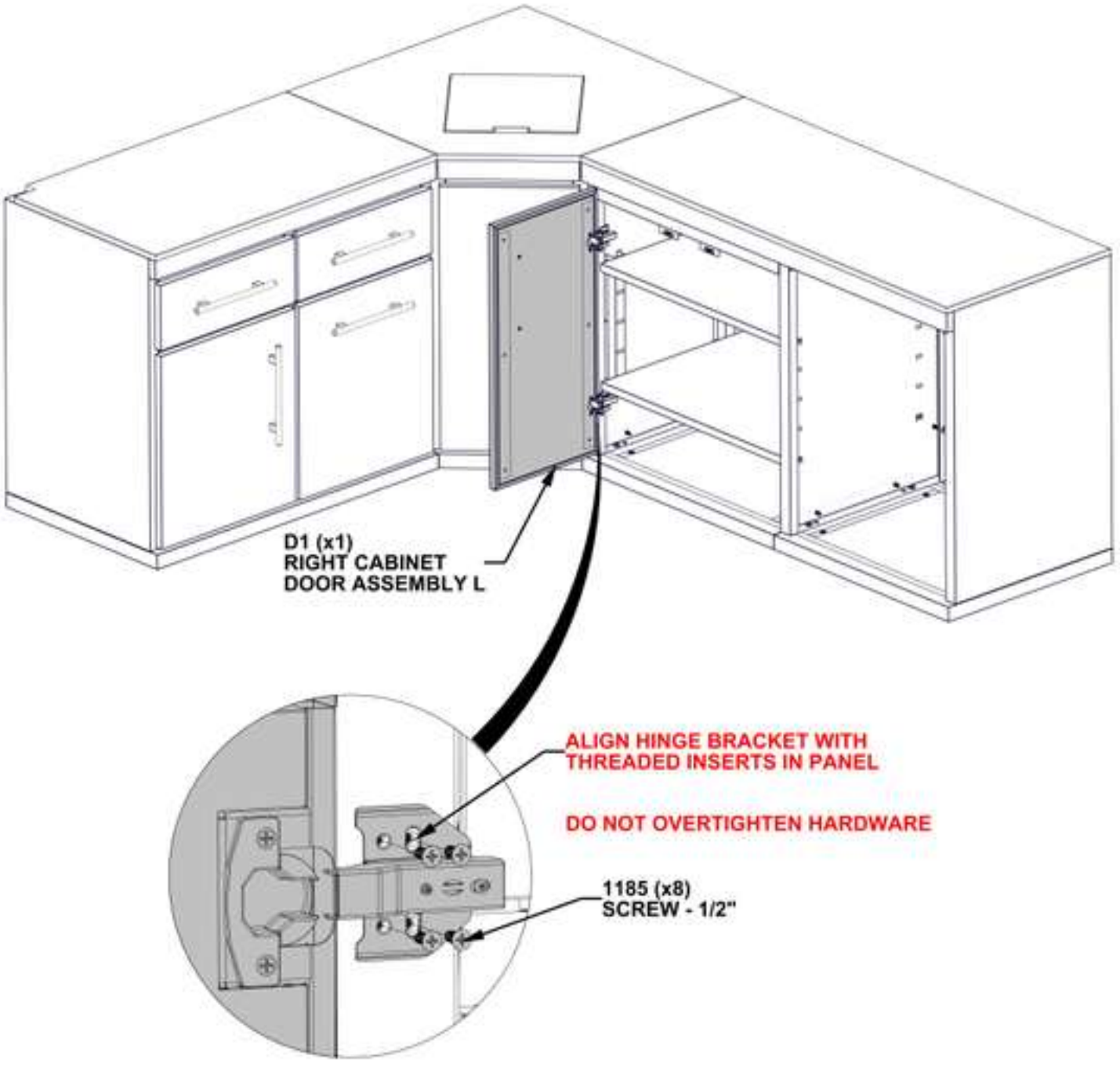

STEP 105 - CABINET DOOR ATTACHMENT



D2 RIGHT CABINET DOOR ASSEMBLY R - A4M04455
(x1) 31 3/4"x15 9/16"x15/16" (24x396x807)

QTY	PART NUMBER	DESCRIPTION
8	H101185	PHILLIPS FLAT HEAD 8-32x.5 SCREW

- ONLY KITCHEN CABINETS ARE SHOWN FOR DETAIL.
- FOR THIS STEP IT IS HELPFUL TO HAVE AN ADDITIONAL PERSON HELP HOLD DOOR IN PLACE.
- WITH CABINET HINGES ATTACHED TO DOOR, ALIGN HOLES IN HINGE BRACKET WITH THREADED INSERTS IN SIDE OF CABINET PANEL.

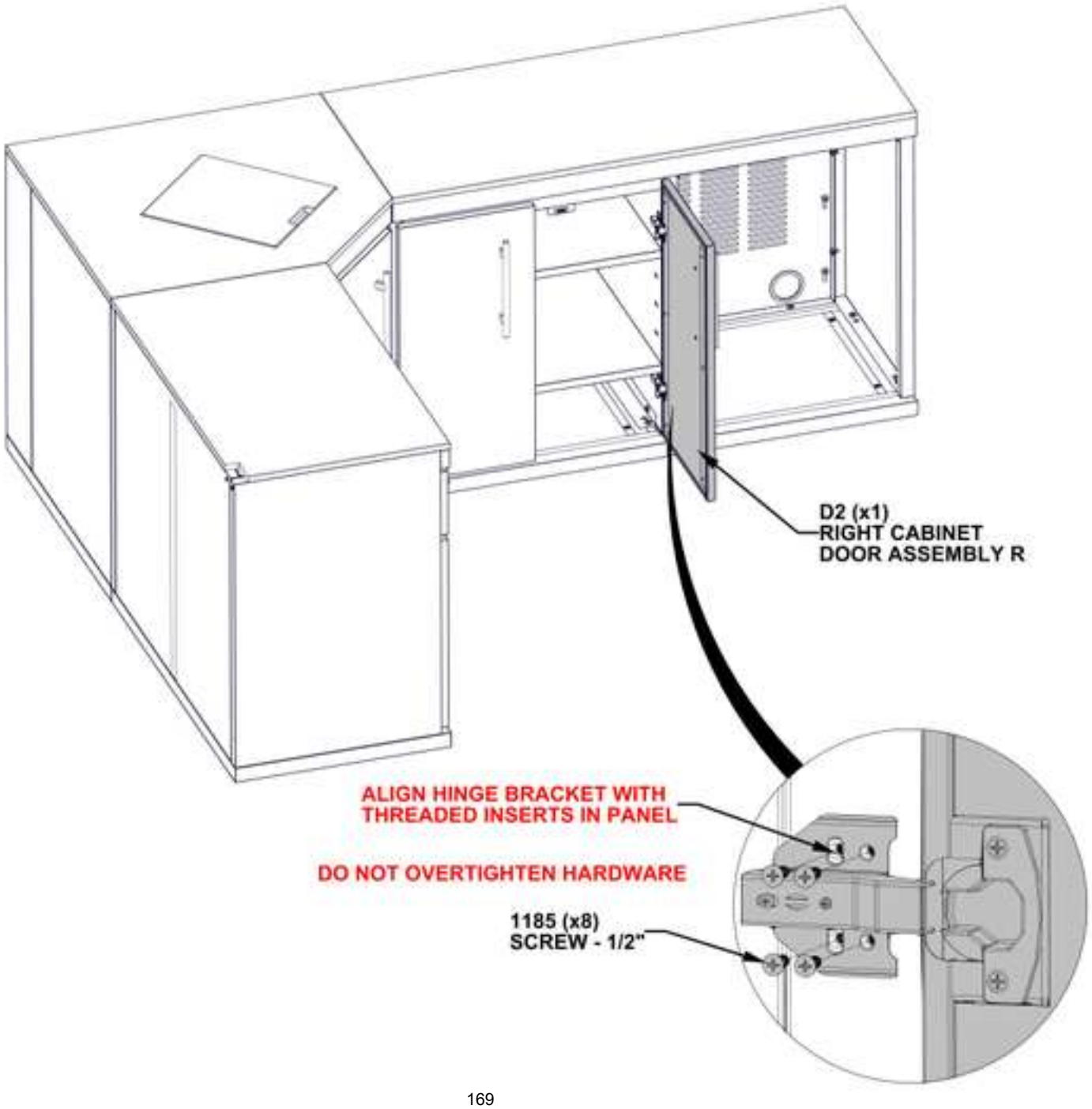

STEP 106 - SINK CABINET ASSEMBLY



A2 MAGNET BRACKET - A4M03026
(x1) 1"x1 1/4"x3 1/8" (25x31x80)

QTY	PART NUMBER	DESCRIPTION
2	H101289	PAN HEAD SCREW 8-32x1/2" SS

- ONLY KITCHEN CABINETS ARE SHOWN FOR DETAIL.

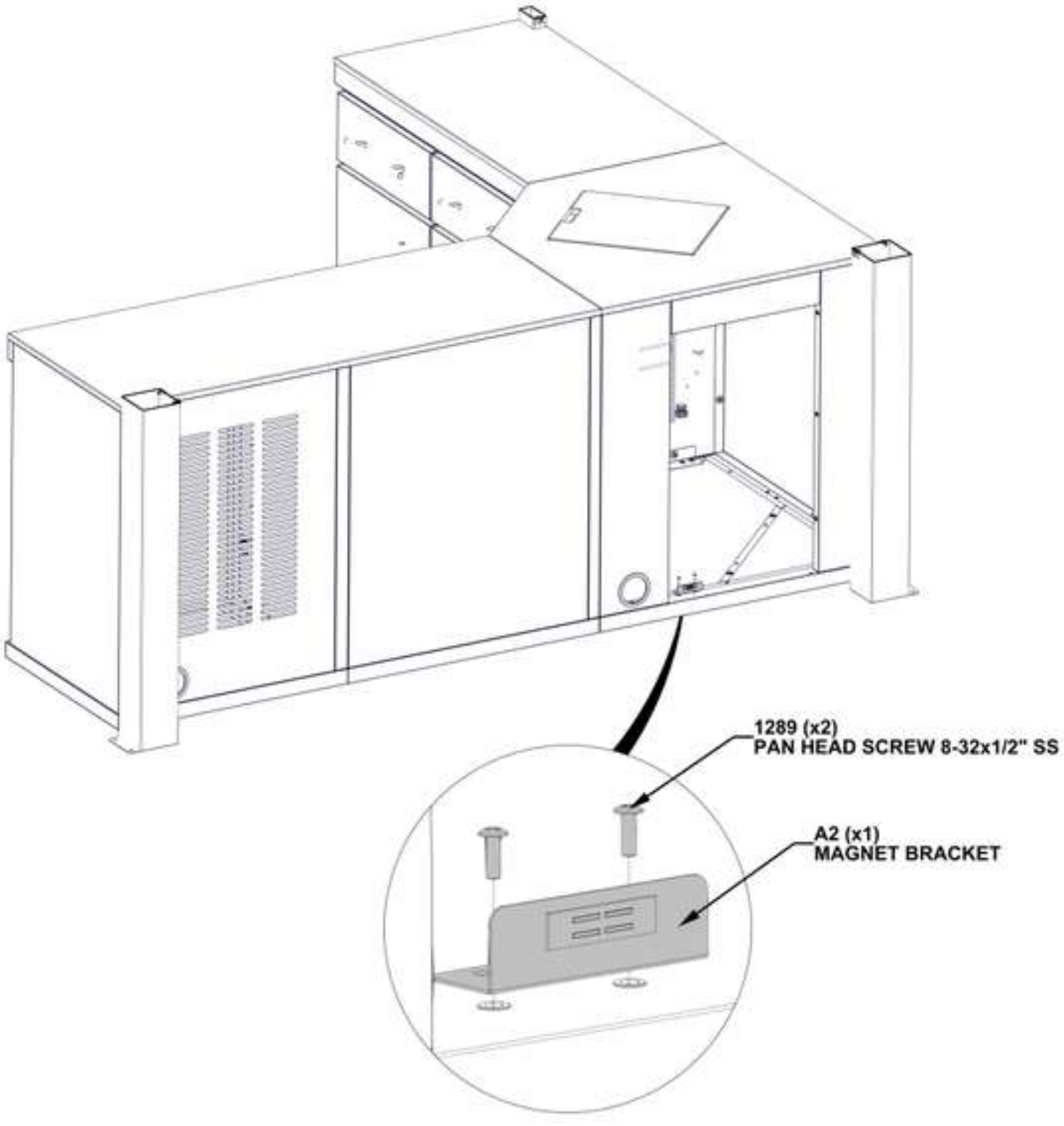

STEP 107 - SINK CABINET DOOR INSTALLATION



D4 SINK CABINET PUSH DOOR ASSEMBLY - A4M04479
(x1) 31 3/4"x18 1/4"x15/16" (23.2x463x807.2)

- ONLY KITCHEN CABINETS ARE SHOWN FOR DETAIL.
- INSERT HINGE PIN ON BOTTOM OF DOOR INTO THE HOLE ON THE FLOOR PANEL.
- PRESS DOWN HINGE PIN ON TOP OF DOOR AND RELEASE INTO THE HOLE IN TOP TABLE ASSEMBLY.

D4 (x1)
SINK CABINET PUSH
DOOR ASSEMBLY

STEP 108 - CABINET DOOR ADJUSTMENT (AS NEEDED)

- ONLY KITCHEN CABINETS ARE SHOWN FOR DETAIL.
- ADJUST HINGES (AS NEEDED) SO THAT THE GAP AROUND ALL DOORS IS THE SAME AND THERE IS NO INTERFERENCE BETWEEN DOORS AND CABINETS.
- ADJUST MAGNET CATCH BRACKETS AS NEEDED.

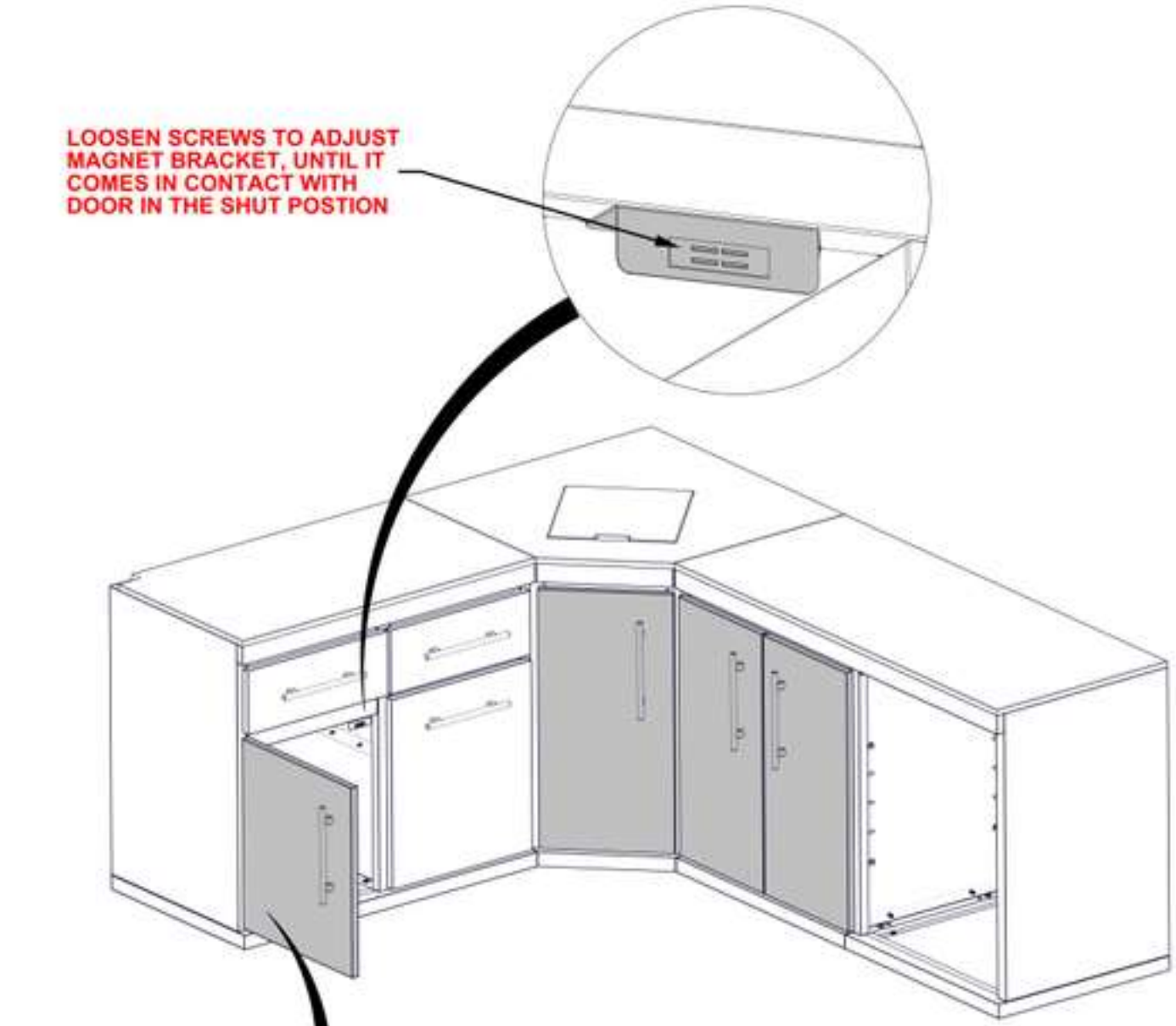



SCREW #1:
SCREW CLOCKWISE TO BRING EDGE OF DOOR AWAY FROM CABINET. SCREW COUNTER CLOCKWISE TO BRING EDGE OF DOOR CLOSER TO CABINET

SCREW #2:
LOOSEN THESE SCREWS TO SLIDE DOOR TOWARD CABINET OR AWAY FROM CABINET

STEP 109 - BAR CABINET ASSEMBLY



S8 BAR TABLE SIDE PANEL ASSEMBLY L - A4M04492
(x1) 36 7/8"x27 3/8"x1 15/16" (50x696x936.5)

QTY	PART NUMBER	DESCRIPTION
4	H101202	TORX PAN HEAD 1/4-20x3/4 ASSY

- POSITION BAR SIDE PANEL AS SHOWN BELOW.
- BAR TABLE SIDE PANEL HAS FACTORY INSTALLED ADJUSTABLE FEET.
- ADJUST EACH FOOT UNTIL PANEL IS LEVEL.

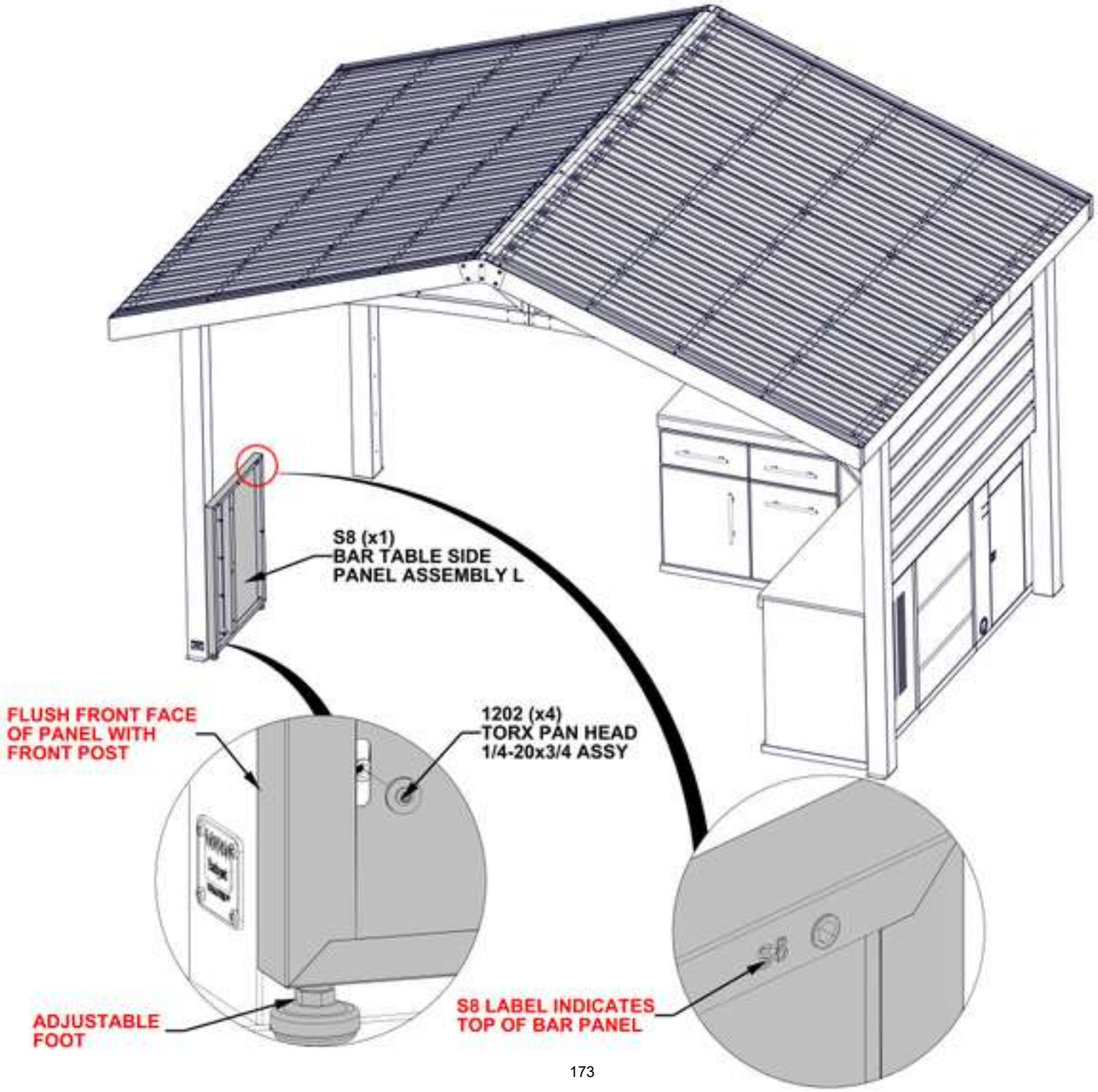

STEP 110 - BAR CABINET ASSEMBLY

QTY	PART NUMBER	DESCRIPTION
6	H101202	TORX PAN HEAD 1/4-20x3/4 ASSY



H10 TUBE FRAME SUPPORT - A4M04490
(x1) 35 15/16"x18 1/4"x1 15/16" (50x463x912.5)



G7 BAR TABLE BACK PANEL - A4M04488
(x1) 37 5/16"x34 1/2"x1" (25x877x948.5)

- ONLY BAR CABINET IS SHOWN FOR DETAIL.
- EACH TUBE FRAME SUPPORT HAS FACTORY INSTALLED ADJUSTABLE FEET.
- ADJUST EACH FOOT UNTIL FRAME IS LEVEL.
- MAKE SURE THE TUBE FRAME IS ORIENTED CORRECTLY BASED ON THE TWO THREADED INSERTS ON BACKSIDE OF TUBE.

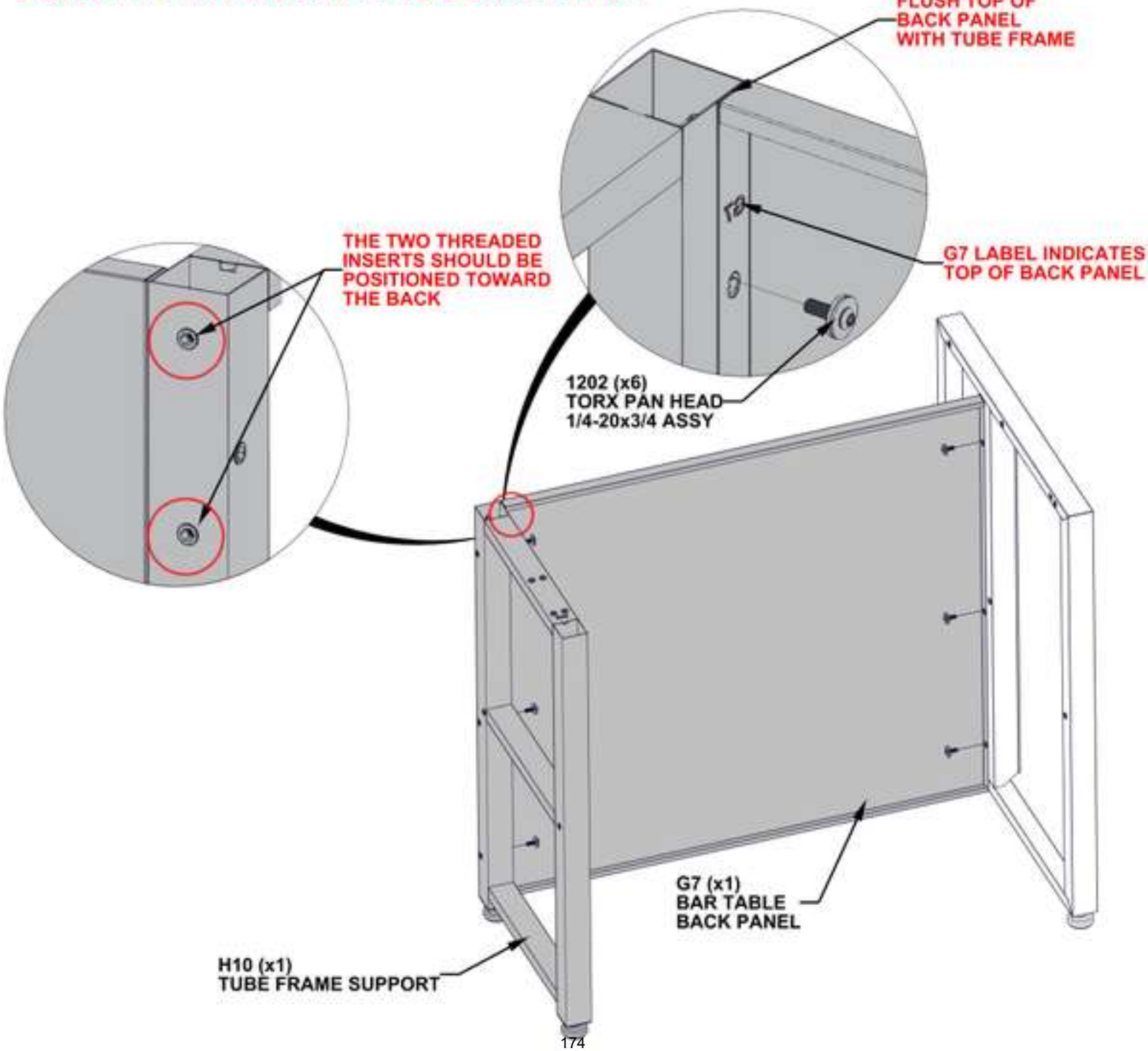

STEP 111 - BAR CABINET ASSEMBLY

QTY	PART NUMBER	DESCRIPTION
6	H101202	TORX PAN HEAD 1/4-20x3/4 ASSY



S7 BAR TABLE SIDE PANEL ASSEMBLY R - A4M04485
(x1) 36 7/8"x27 3/8"x1 15/16" (50x696x936.5)

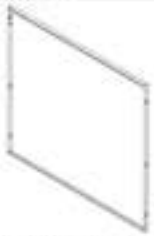

G7 BAR TABLE BACK PANEL - A4M04488
(x1) 37 5/16"x34 1/2"x1" (25x877x948.5)

- ONLY BAR CABINET IS SHOWN FOR DETAIL.
- BAR TABLE SIDE PANEL HAS FACTORY INSTALLED ADJUSTABLE FEET.
- ADJUST EACH FOOT UNTIL PANEL IS LEVEL.

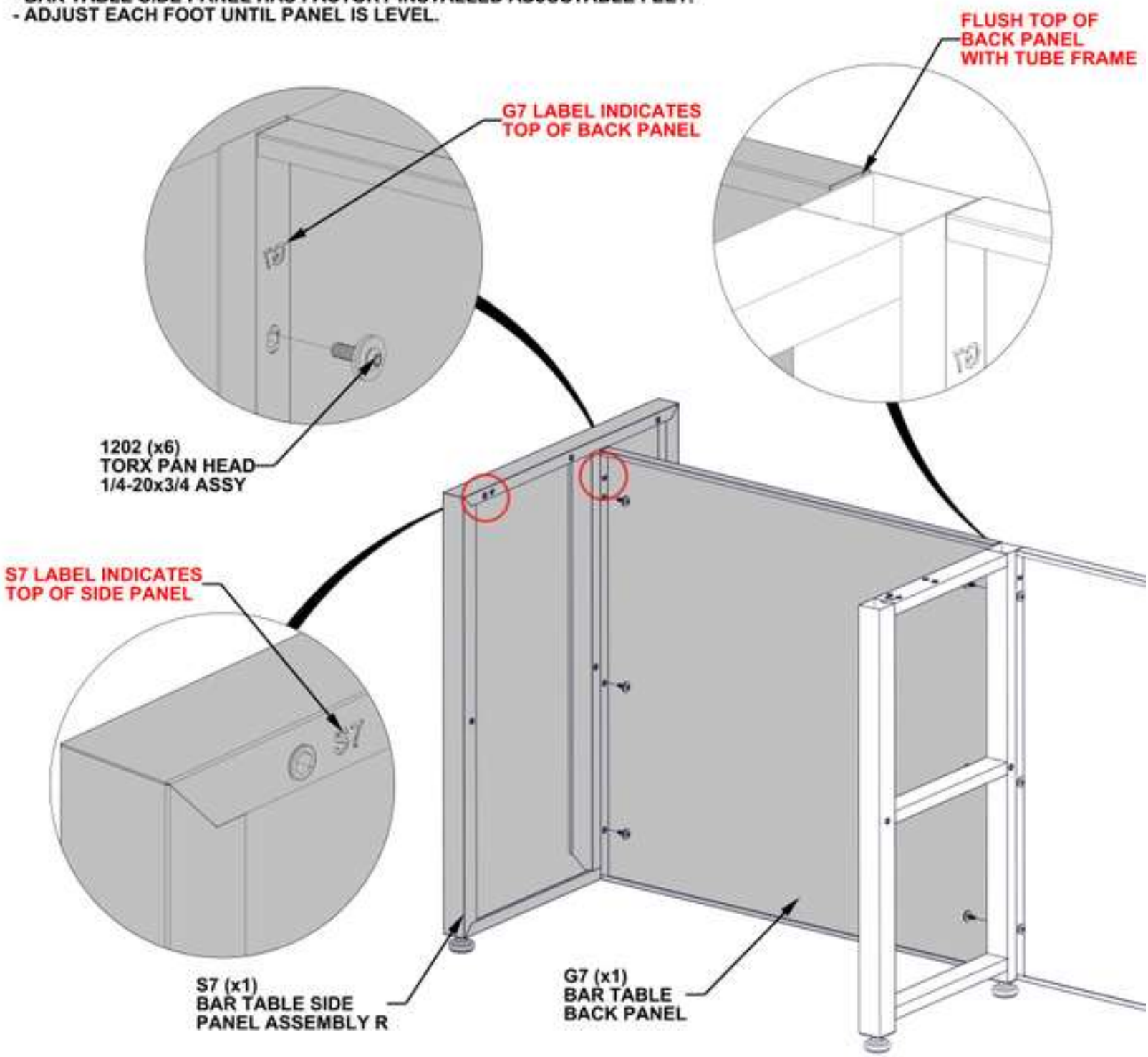

STEP 112 - BAR CABINET ASSEMBLY



L2 BAR TABLE SHELF ASSEMBLY - A4M04489
(x2) 37 5/16"x18 3/16"x1" (25x462x947.5)

QTY	PART NUMBER	DESCRIPTION
8	H101202	TORX PAN HEAD 1/4-20x3/4 ASSY

- ONLY BAR CABINET IS SHOWN FOR DETAIL.

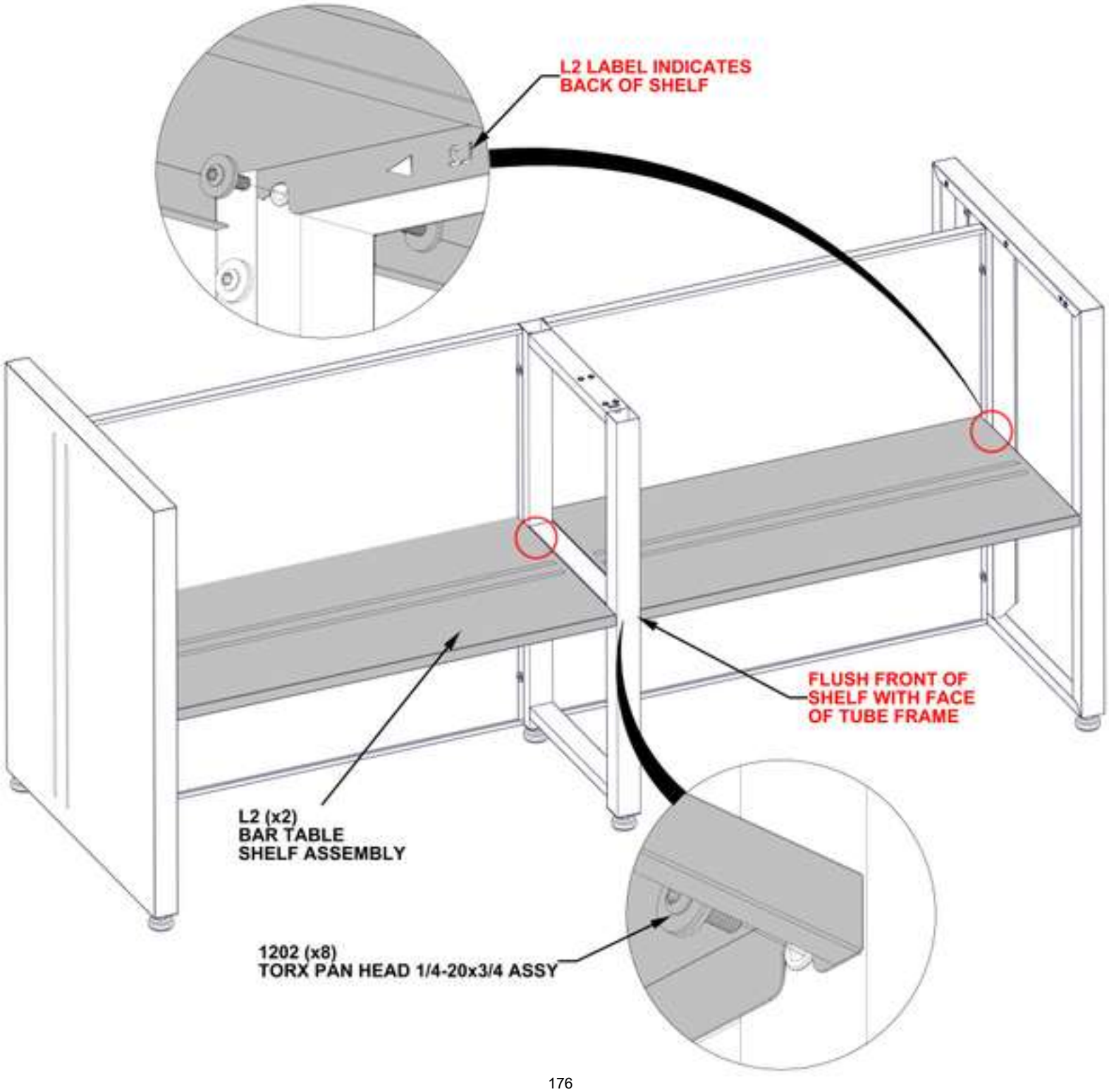

STEP 113 - BAR CABINET ASSEMBLY



A1 TABLE BRACKET ASSEMBLY - A4M03634
(x1) 6 15/16"x6 15/16"x1 15/16" (50x176x176)

QTY	PART NUMBER	DESCRIPTION
2	H101202	TORX PAN HEAD 1/4-20x3/4 ASSY

- ONLY BAR CABINET IS SHOWN FOR DETAIL.

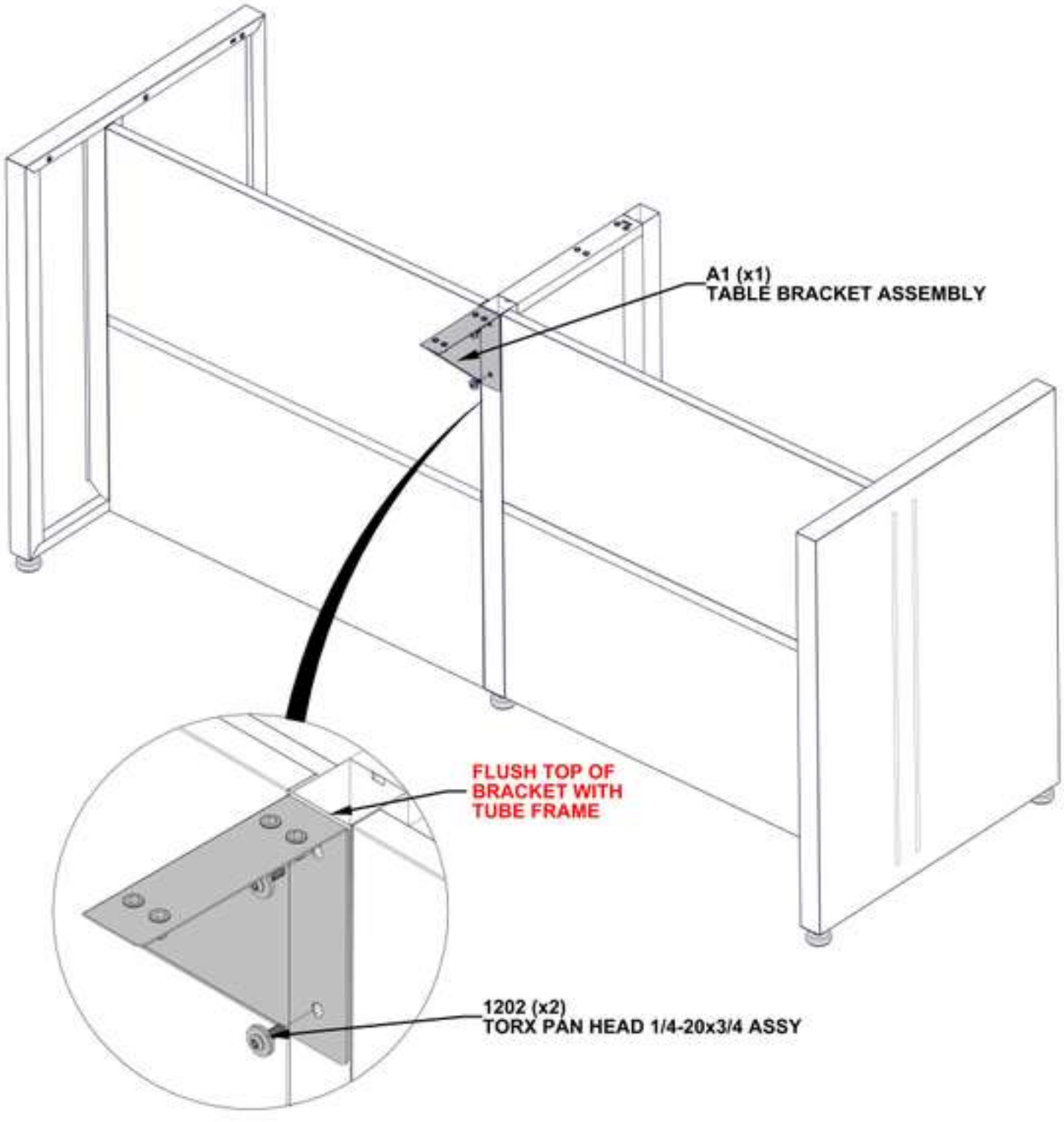

STEP 114A - BAR CABINET ASSEMBLY



T5 BAR TABLETOP - A4M04487
(x2) 38 3/8"x27 3/8"x1" (25x696x974.5)

QTY	PART NUMBER	DESCRIPTION
6	H101202	TORX PAN HEAD 1/4-20x3/4 ASSY

- ONLY BAR CABINET IS SHOWN FOR DETAIL.

HAND TIGHTEN ONLY

1202 (x6)
TORX PAN HEAD 1/4-20x3/4 ASSY

FLUSH ALL FACES
OF CABINET

T5 LABEL INDICATES
FRONT OF TABLETOP

T5 (x2)
BAR TABLETOP

STEP 114B - BAR CABINET ASSEMBLY

QTY	PART NUMBER	DESCRIPTION
8	H101132	TORX SOCKET SCREW SHORT 1/4-20

- ONLY BAR CABINET IS SHOWN FOR DETAIL.

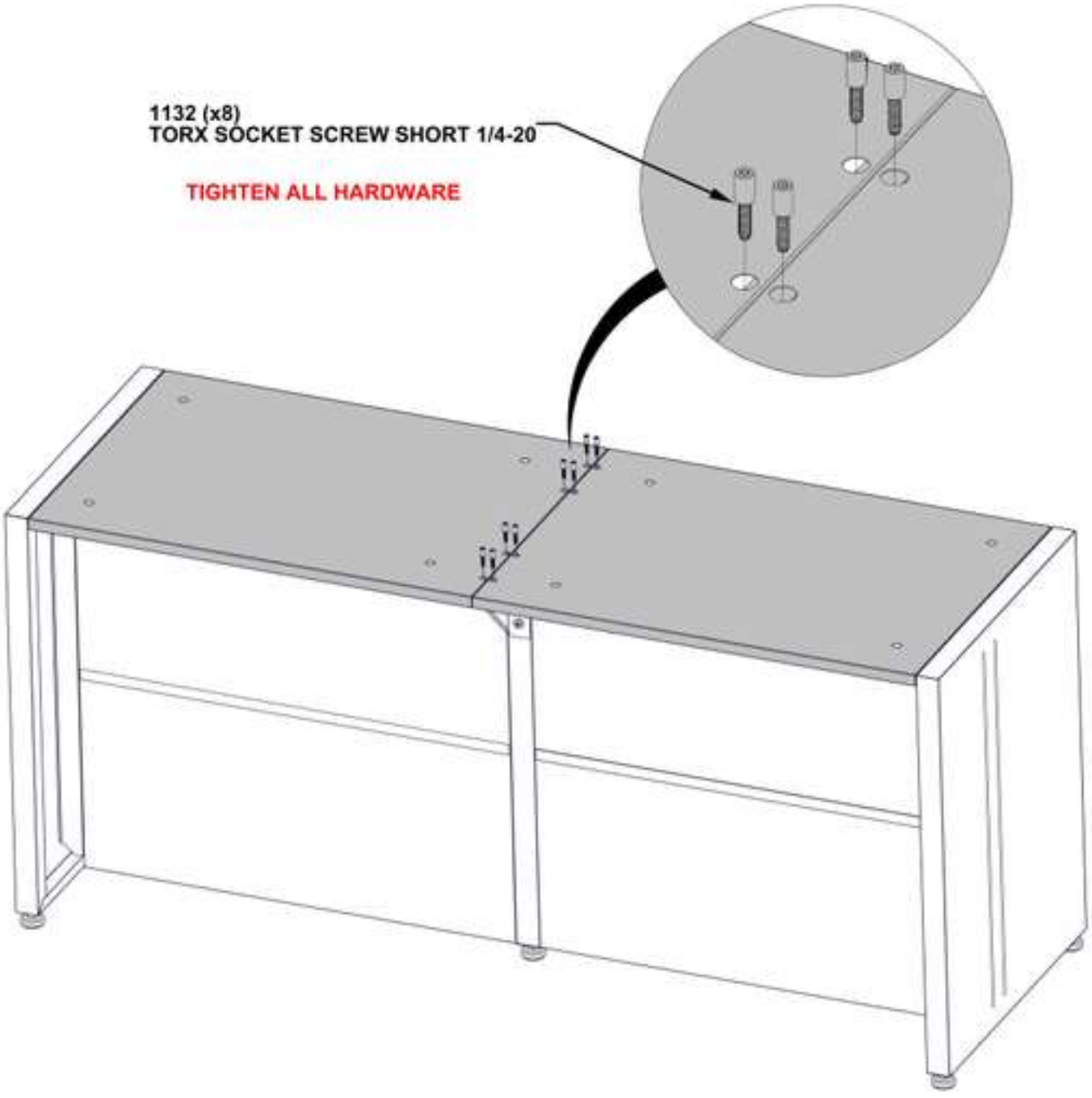

STEP 115A - BAR CABINET COUNTERTOP INSTALLATION



M4 BAR TABLE COUNTERTOP - A4M04484
(x2) 40 3/8"x27 3/8"x11/16" (18x696x1025.5)

- ONLY BAR CABINET IS SHOWN FOR DETAIL.
- IT IS RECOMMENDED TO HAVE AT LEAST TWO PEOPLE SET COUNTERTOP IN PLACE.
- SLIDE IN PLACE UNTIL MARBLE IS FLUSH ON ALL SIDES.
- WHEN SETTING COUNTERTOP IN PLACE, MAKE SURE YOUR FINGERS ARE CLEAR AND NOT UNDERNEATH.

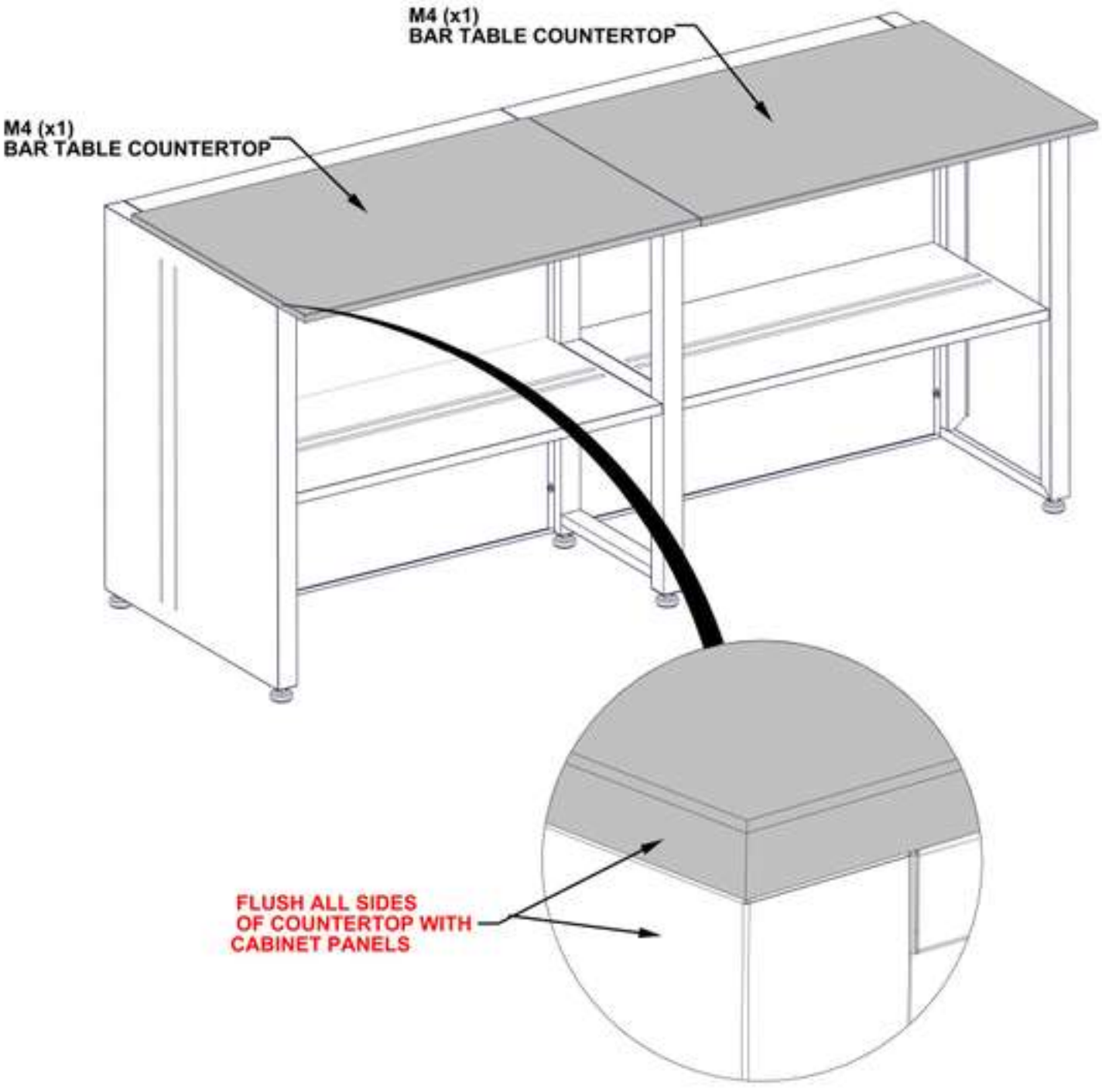

STEP 115B - BAR CABINET COUNTERTOP INSTALLATION

QTY	PART NUMBER	DESCRIPTION
8	H101292	TORX PAN HEAD 1/4-20x13/32"
8	H101053	STEEL WASHER 6x20
8	H101054	SEALANT WASHER

- ONLY BAR CABINET IS SHOWN FOR DETAIL.
- MAKE SURE YOU ARE USING THE CORRECT HARDWARE FOR THIS STEP.
- ONCE COUNTERTOP IS IN PLACE, IT IS RECOMMENDED TO COVER WITH A PIECE OF CARDBOARD OR FOAM UNTIL ASSEMBLY IS FINISHED TO PREVENT DAMAGE.
- DO NOT USE COUNTERTOP SURFACE AS A WORK BENCH.

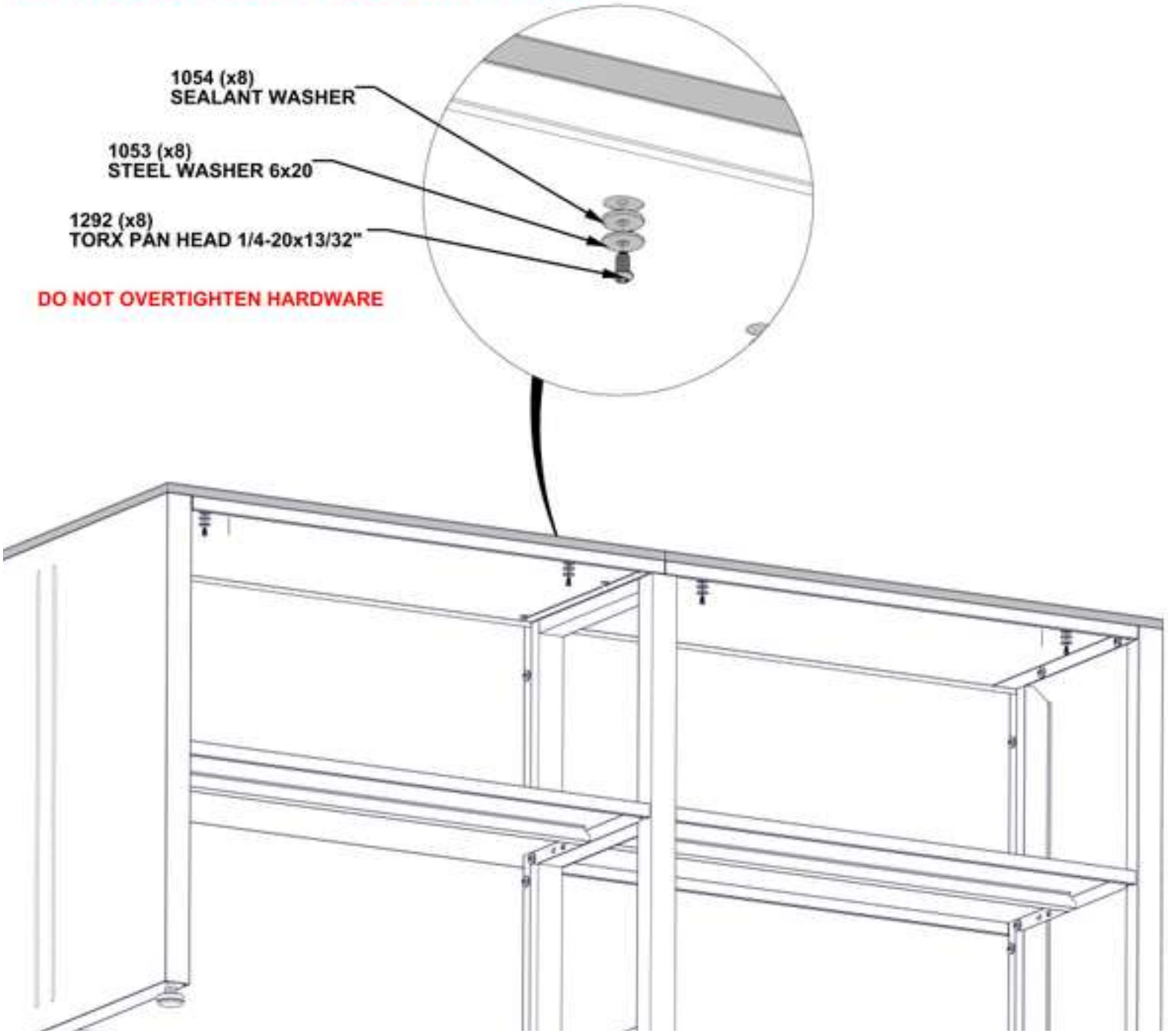

STEP 116A - KITCHEN CABINET ACCESSORIES



A03 BACK SHELF - A4M02072
(x2) 2 7/16"x7 15/16"x23 3/4" (61x201x603)



A6P00679 EVA TAPE
(x8)

- APPLY EVA TAPE IN THE APPROXIMATE LOCATIONS SHOWN.
- REPEAT FOR BOTH A03 SHELVES.

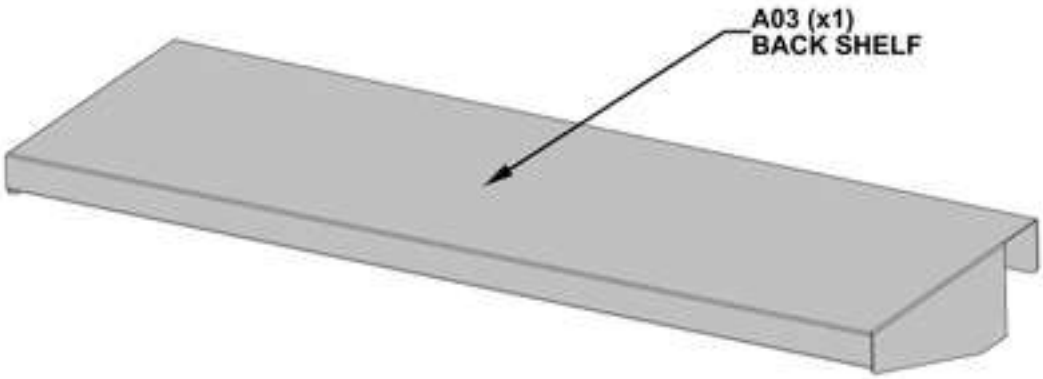

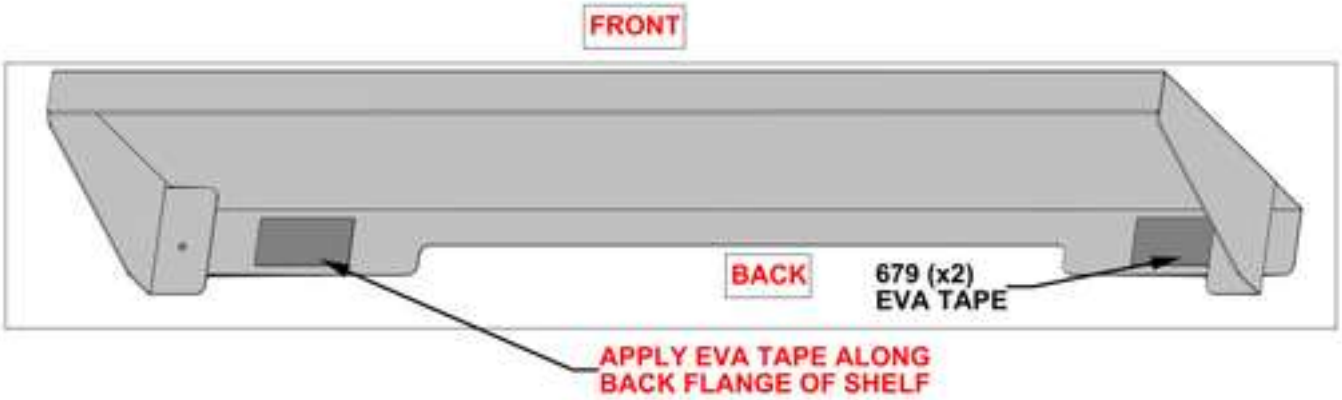

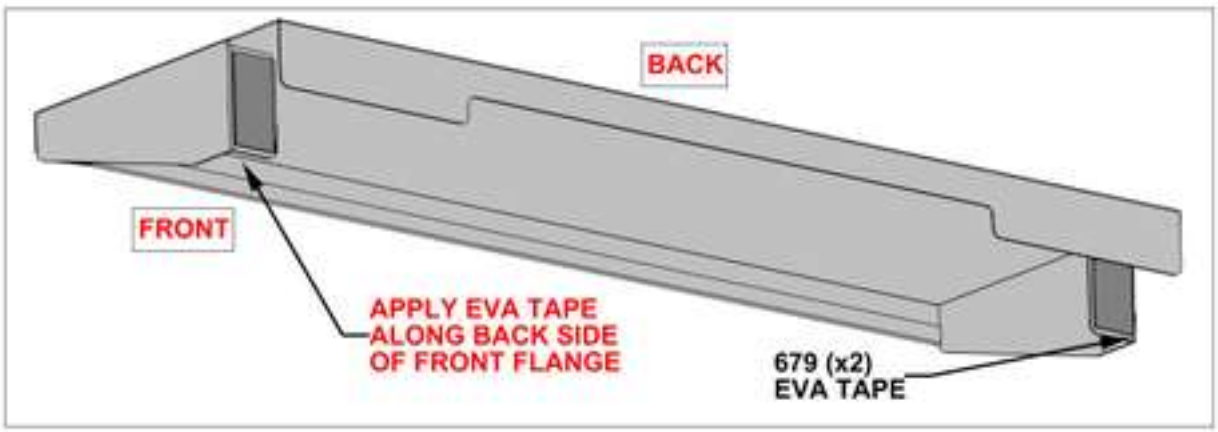

STEP 116B - KITCHEN CABINET ACCESSORIES



A03 BACK SHELF - A4M02072
(x2) 2 7/16"x7 15/16"x23 3/4" (61x201x603)

- MAKE SURE EVA TAPE FROM PREVIOUS STEP, HAS BEEN APPLIED TO FLANGES OF EACH A03 SHELF BEFORE INSTALLING. THIS WILL PREVENT SHELVES FROM SCRATCHING SURFACE OF BACK PANEL.
- SLIDE BACK SHELF OVER ANY TUBE ALONG BACK PANEL. SHELVES CAN BE POSITIONED ANYWHERE DESIRED.

A03 (x2)
BACK SHELF

STEP 117 - KITCHEN CABINET ACCESSORIES



A4M02290 (x1) MAGNETIC PAPER TOWEL HOLDER

- MAGNETIC PAPER TOWEL HOLDER CAN BE ATTACHED TO ANY METAL SURFACE ON THE KITCHEN. WE RECOMMEND ATTACHING ALONG THE BACK PANEL.

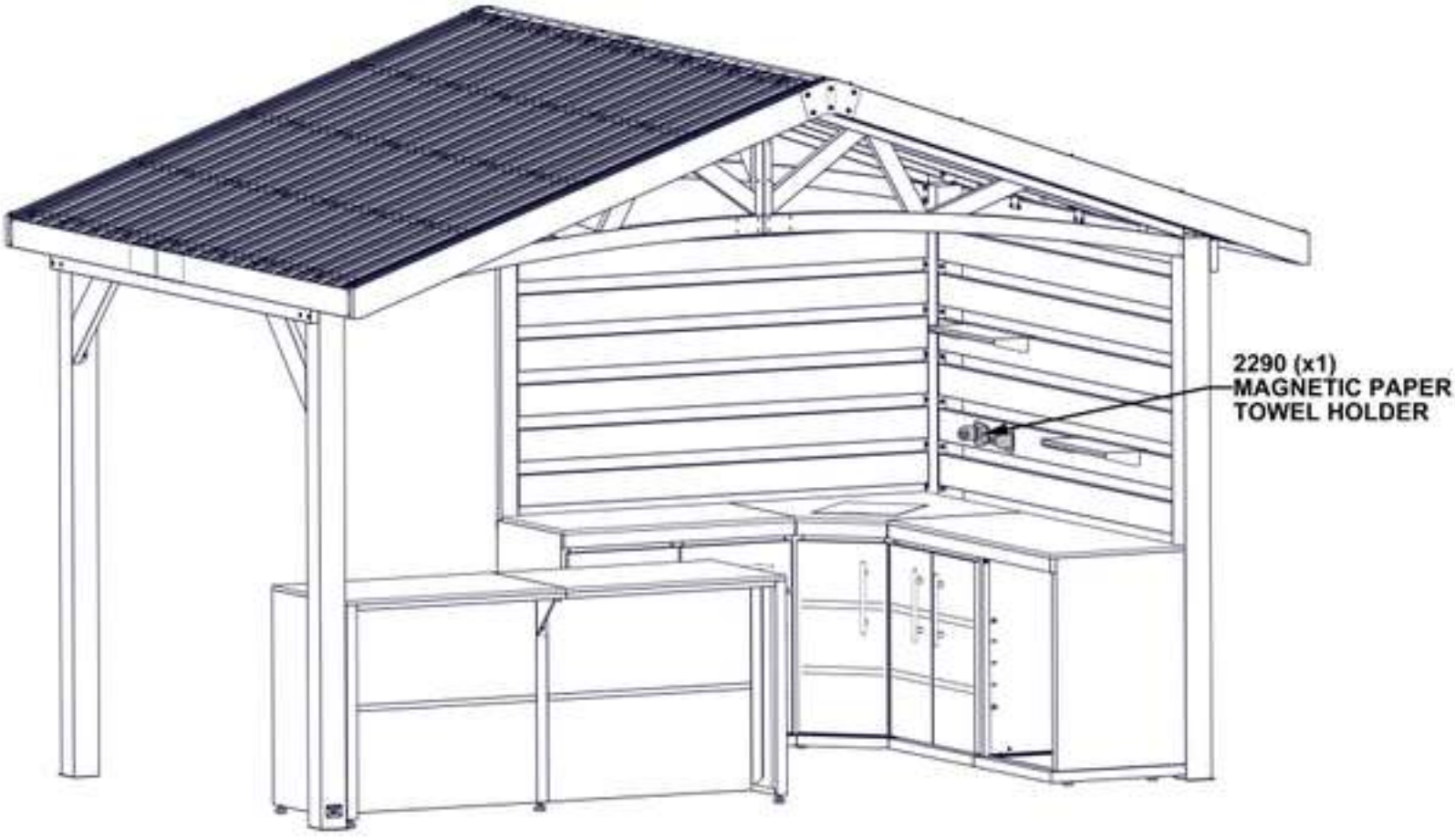

STEP 118 - KITCHEN CABINET ACCESSORIES (OPTIONAL)



A4M05361 TV BRACKET
(x2)

QTY	PART NUMBER	DESCRIPTION
2	H100459	BOLT WH 5/16x1 1/4 BLK
2	H100469	NUT BARREL WH 5/16X5/8 BLK
4	H100486	BOLT WH 1/4x5/8 BLK
4	H101133	WASHER FLAT 7x14 BLK
4	H100653	NUT LOCK 1/4 BLK

- TV BRACKET 5361 CAN BE MOUNTED AS NEEDED TO FIT YOUR TV. TV BRACKET MAY NOT BE COMPATIBLE WITH ALL TV MOUNTS. TV MOUNT PLATE IS NOT INCLUDED.
- PLACE BRACKET OVER WALL PANEL IN THE DESIRED LOCATION. USE THE HOLE IN 5361 BRACKET TO DRILL A 3/8" [10mm] THROUGH HOLE IN EACH SIDE OF BEAM.
- AFTER HOLE HAS BEEN DRILLED, MOUNT BRACKET AS SHOWN.
- THIS STEP IS OPTIONAL.

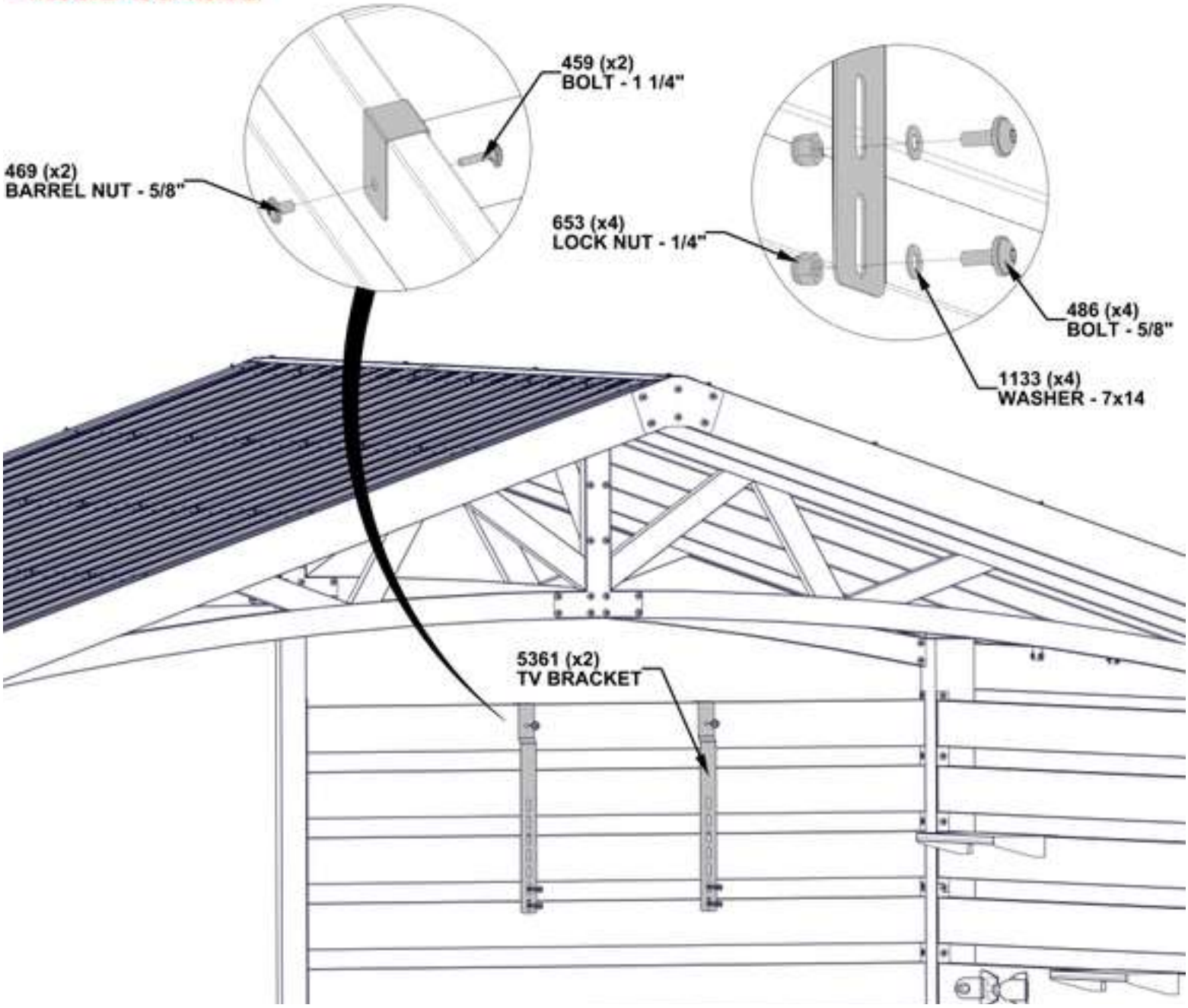

STEP 119 - KITCHEN ANCHORING

QTY	PART NUMBER	DESCRIPTION
8	H100120	CONCRETE ANCHOR 1/4"x2"
8	H100630	WASHER FLAT 8x19 BLK

- MANUFACTURER RECOMMENDS INSTALLATION ON CONCRETE SURFACE OR CONCRETE POST PADS AS SHOWN BELOW.
- FOR INSTALLATION ON WOOD DECK, YOU MUST ENSURE THERE IS AMPLE STRUCTURAL SUPPORT UNDER THE DECK. HARDWARE NOT INCLUDED FOR DECK ATTACHMENT.

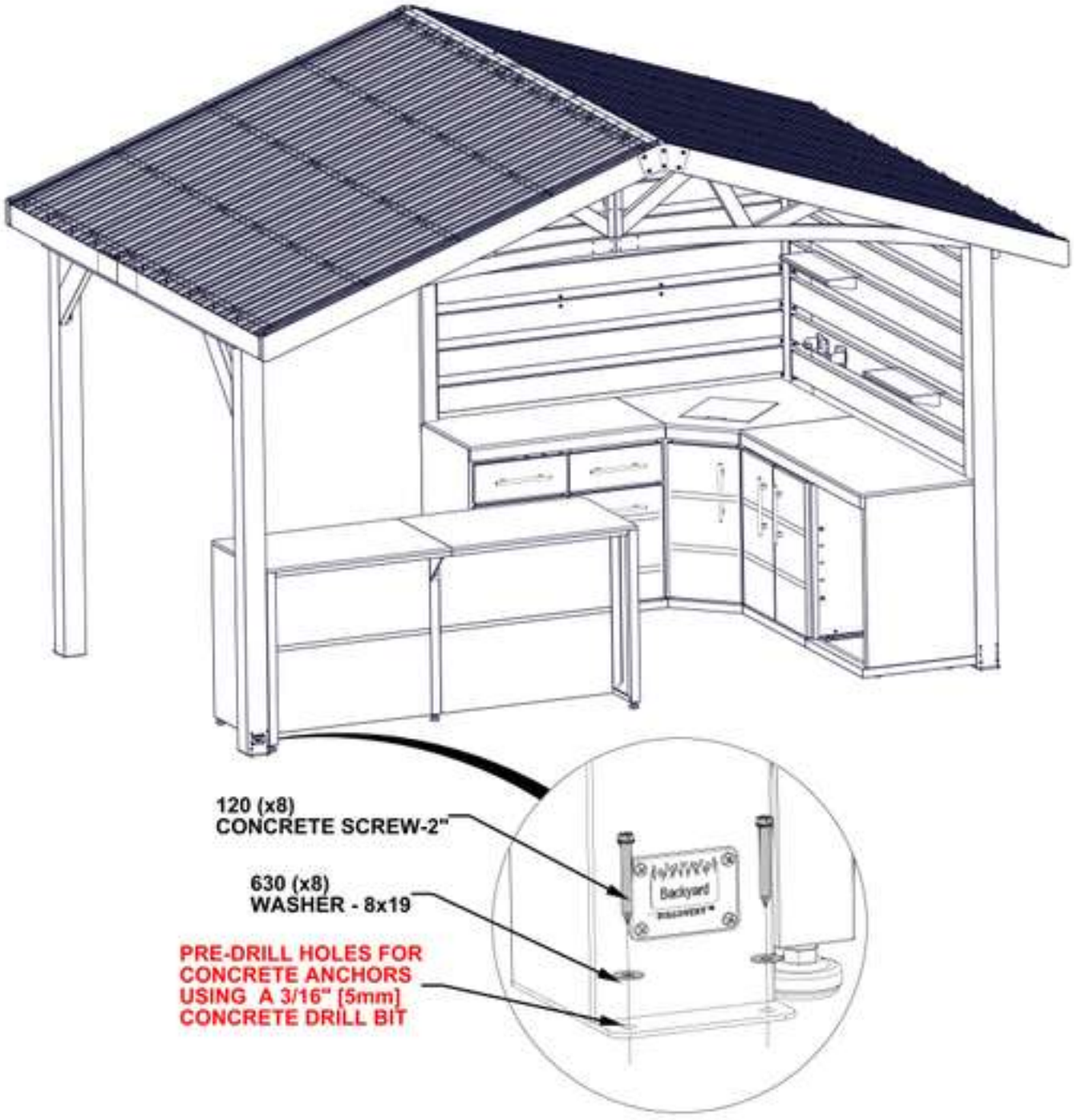

OUTDOOR KITCHEN FRIDGE



9240162 (x1) OUTDOOR KITCHEN FRIDGE - RIGHT OPEN

- FOR INSTALLATION OF OUTDOOR KITCHEN FRIDGE, REFER TO PAGES IN THIS INSTRUCTION MANUAL.
- FOR DETAILED INFORMATION OF OUTDOOR KITCHEN FRIDGE, REFER TO ASSEMBLY INSTRUCTIONS THAT COME PACKAGED WITH THE OUTDOOR KITCHEN FRIDGE.
- FOLLOW DIRECTIONS FOR PROPER CARE AND USE.

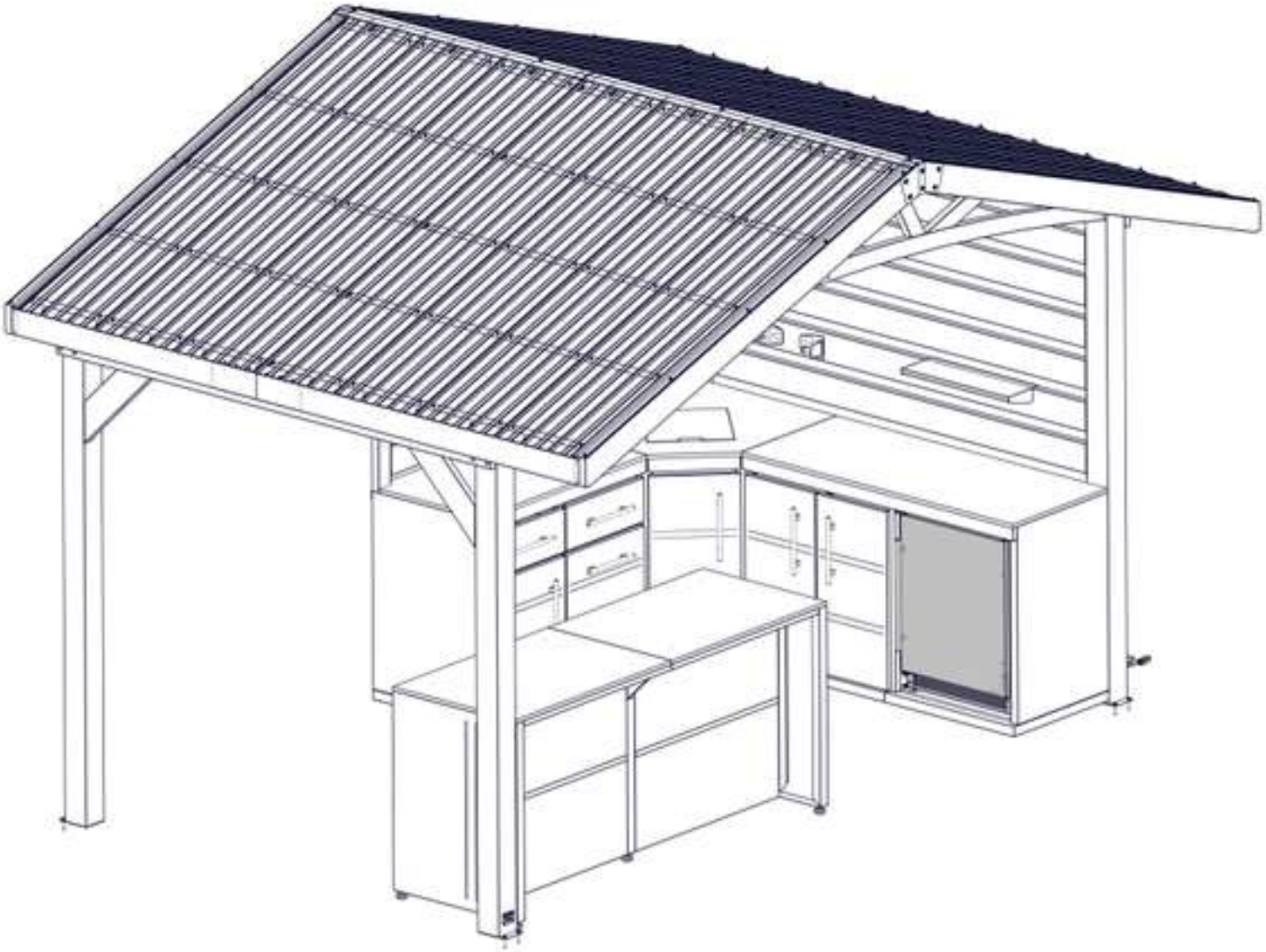

OUTDOOR KITCHEN FRIDGE

- CAREFULLY SLIDE FRIDGE INTO CABINET OPENING MAKING SURE THAT THE ELECTRICAL CORD IS ROUTED THROUGH THE HOLES IN THE BACK PANEL OF THE CABINET.
- IF FRIDGE IS NOT IN UPRIGHT POSITION, PLEASE LET SIT FOR 24 HRS BEFORE PLUGGING INTO RECEPTACLE.
- FRIDGE CANNOT BE CONNECTED TO ELECTRICAL ENCLOSURE ATTACHED TO OUTDOOR STRUCTURE.

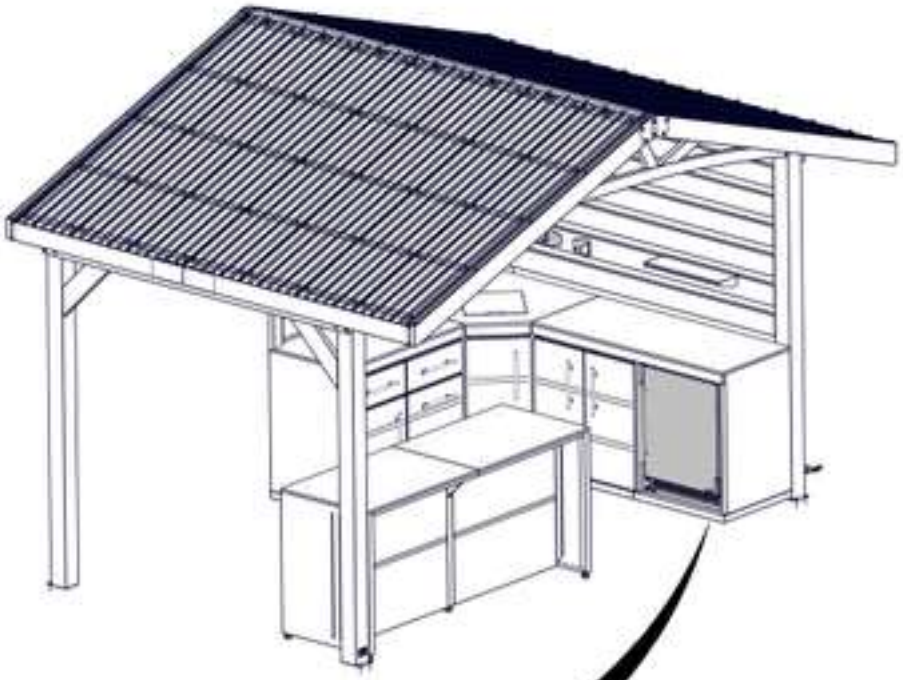

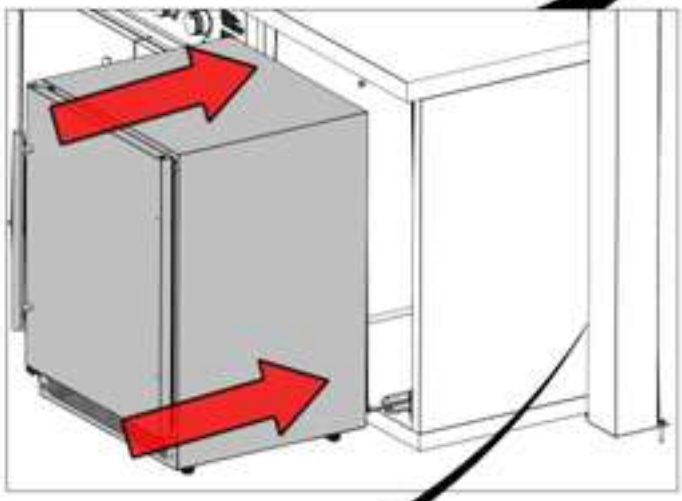



OUTDOOR KITCHEN FRIDGE

- ALIGN FEET ON FRIDGE UNIT SO THAT IT IS LEVEL AND DOES NOT TILT.
- TURN FEET CLOCKWISE TO EXTEND THEM AND COUNTERCLOCKWISE TO SHORTEN. REPEAT THIS FOR ALL FOUR FRIDGE FEET AS NEEDED TO LEVEL.

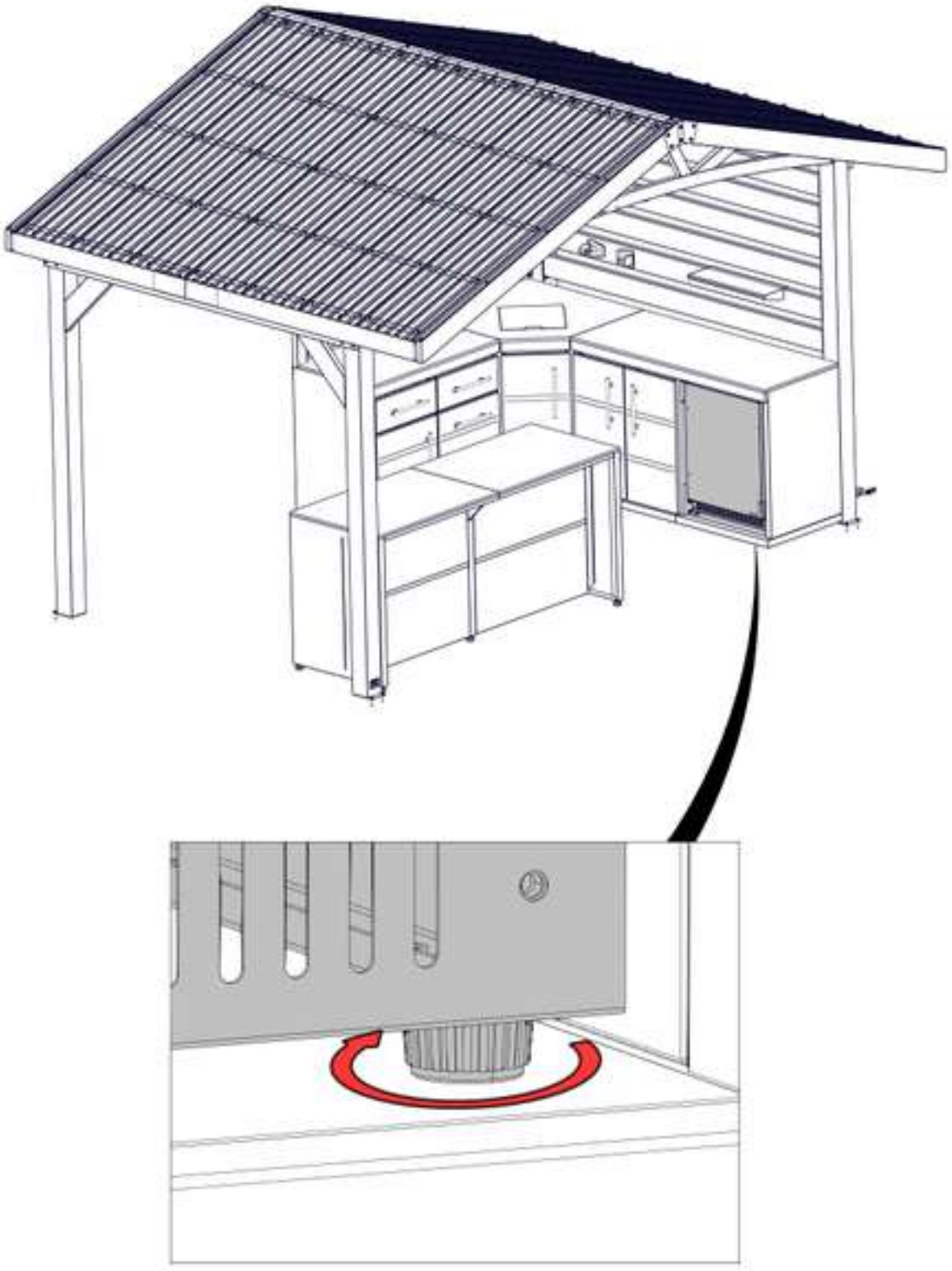

PowerPort™

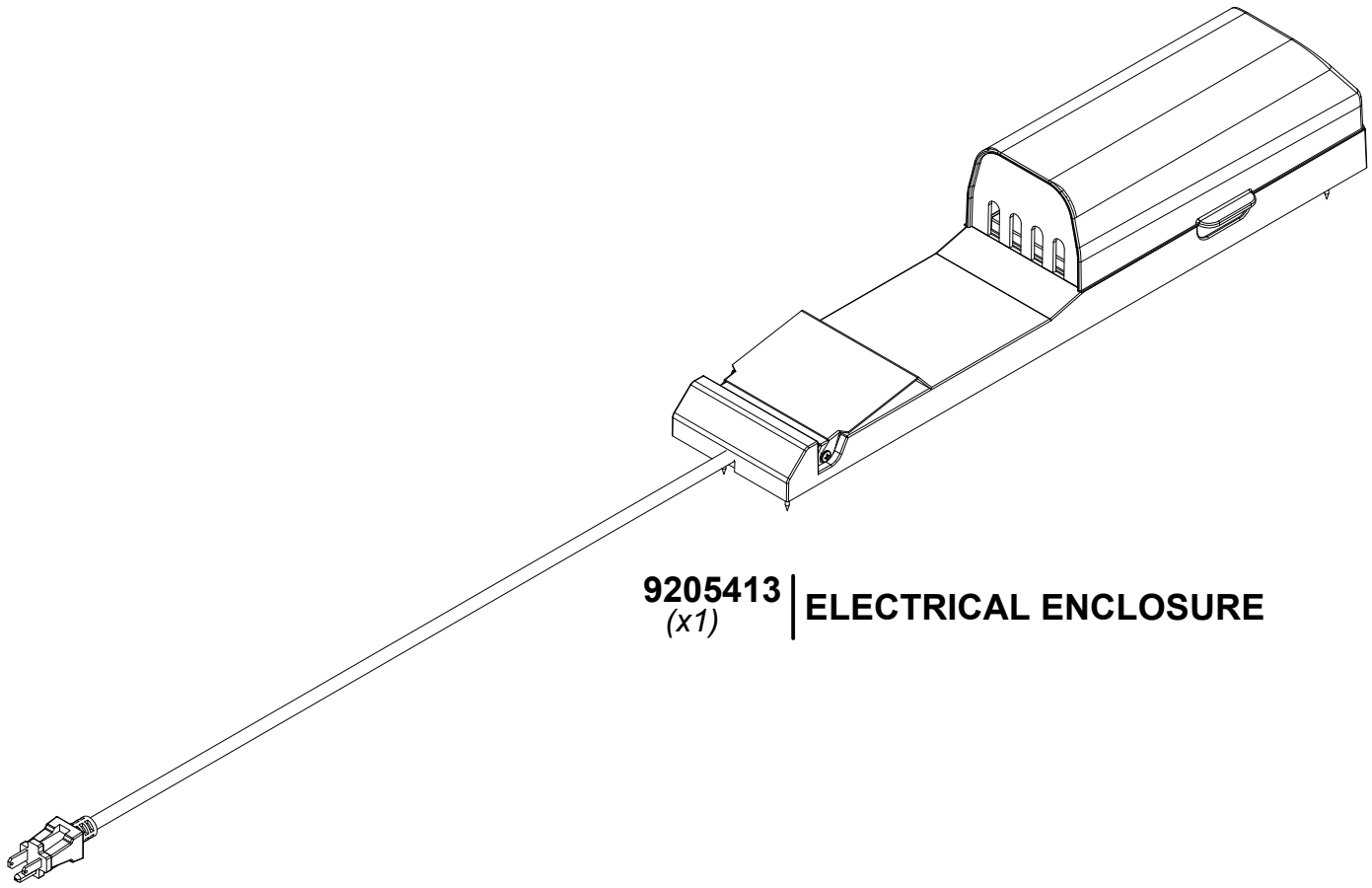

9205413 *(x1)* | **ELECTRICAL ENCLOSURE**

FOR POWERPORT INSTALLATION REFER TO ASSEMBLY INSTRUCTIONS THAT COME PACKAGED WITH THE POWERPORT KIT. INSTALL ON ANY EXTERIOR POST THAT IS DESIRED. FOLLOW DIRECTIONS FOR PROPER INSTALLATION.