KINGSTON

TO ORDER PARTS, CALL: 1-877-252-7277
www.kingstonbrass.com

KS4040,1,2,3,6,7,8KPS

Single Handle Six-Way Diverter Valve with Square Trim Kit

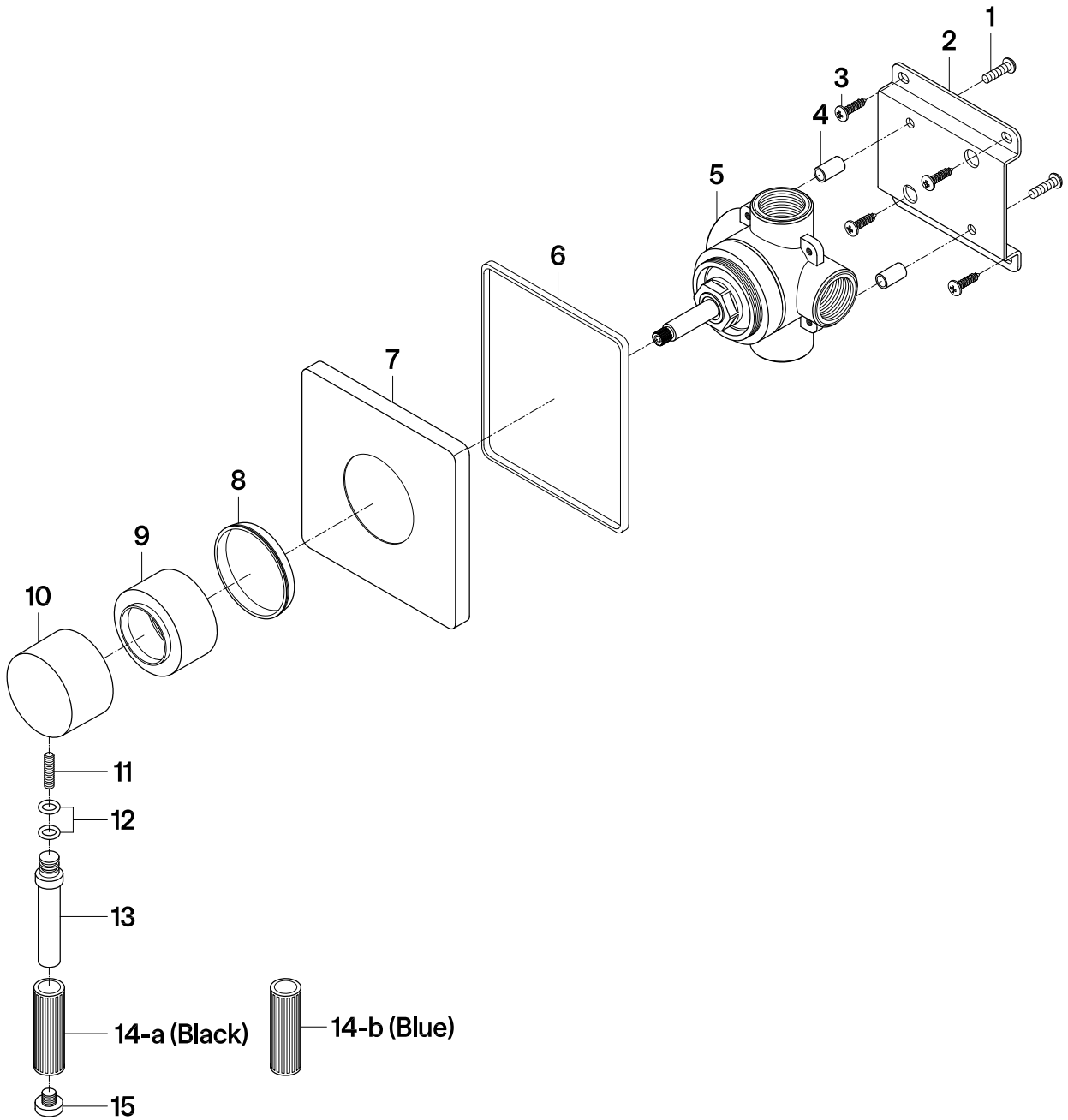

2026-06-B